Google

This is a digital copy of a book that was preserved for generations on library shelves before it was carefully scanned by Google as part of a project to make the world's books discoverable online.

It has survived long enough for the copyright to expire and the book to enter the public domain. A public domain book is one that was never subject to copyright or whose legal copyright term has expired. Whether a book is in the public domain may vary country to country. Public domain books are our gateways to the past, representing a wealth of history, culture and knowledge that's often difficult to discover.

Marks, notations and other marginalia present in the original volume will appear in this file - a reminder of this book's long journey from the publisher to a library and finally to you.

Usage guidelines

Google is proud to partner with libraries to digitize public domain materials and make them widely accessible. Public domain books belong to the public and we are merely their custodians. Nevertheless, this work is expensive, so in order to keep providing this resource, we have taken steps to prevent abuse by commercial parties, including placing technical restrictions on automated querying.

We also ask that you:

+ *Make non-commercial use of the files* We designed Google Book Search for use by individuals, and we request that you use these files for personal, non-commercial purposes.

+ *Refrain from automated querying* Do not send automated queries of any sort to Google's system: If you are conducting research on machine translation, optical character recognition or other areas where access to a large amount of text is helpful, please contact us. We encourage the use of public domain materials for these purposes and may be able to help.

+ *Maintain attribution* The Google "watermark" you see on each file is essential for informing people about this project and helping them find additional materials through Google Book Search. Please do not remove it.

+ *Keep it legal* Whatever your use, remember that you are responsible for ensuring that what you are doing is legal. Do not assume that just because we believe a book is in the public domain for users in the United States, that the work is also in the public domain for users in other countries. Whether a book is still in copyright varies from country to country, and we can't offer guidance on whether any specific use of any specific book is allowed. Please do not assume that a book's appearance in Google Book Search means it can be used in any manner anywhere in the world. Copyright infringement liability can be quite severe.

About Google Book Search

Google's mission is to organize the world's information and to make it universally accessible and useful. Google Book Search helps readers discover the world's books while helping authors and publishers reach new audiences. You can search through the full text of this book on the web at http://books.google.com/

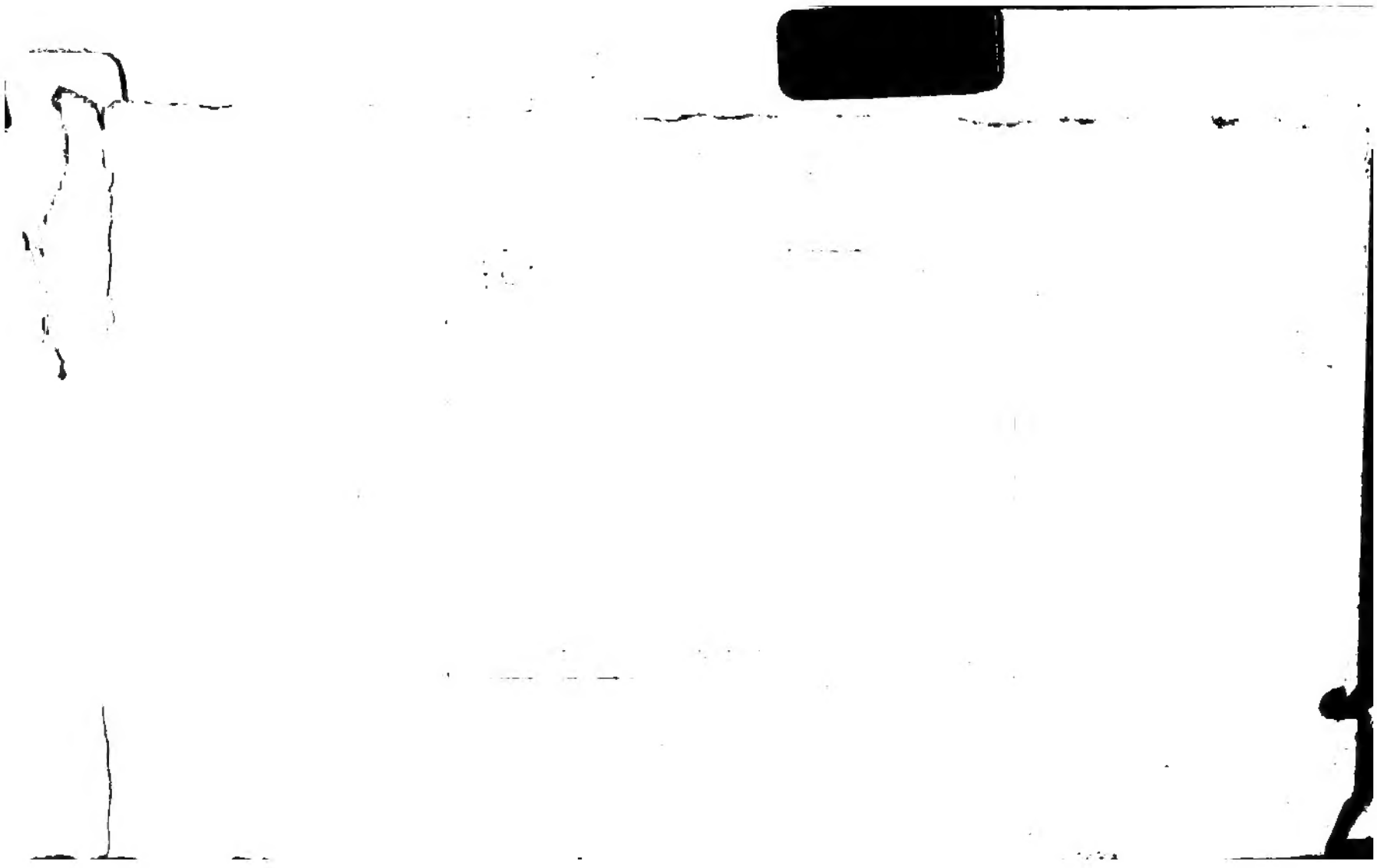

19063

TWENTY-THIRD REPORT

OF

HER MAJESTY'S CIVIL SERVICE COMMISSIONERS,

TOGETHER WITH

APPENDICES.

Presented to both Houses of Parliament by Command of Her Majesty.

LONDON:
PRINTED BY GEORGE E. EYRE AND WILLIAM SPOTTISWOODE,
PRINTERS TO THE QUEEN'S MOST EXCELLENT MAJESTY.
FOR HER MAJESTY'S STATIONERY OFFICE.

1879.

[C.—2439.] *Price* 3*s*. 9*d*.

CONTENTS.

	PAGE
TY-THIRD REPORT - - - -	iii
DIX I.—ORDERS OF HER MAJESTY IN COUNCIL - -	1
DIX II.—Regulations respecting Open Competitive Examinations settled since the issue of the 22nd Report -	23
DIX III.—Limits of Age and Subjects of Examination scribed for the various Departments - - -	35
DIX IV.—Statistical Tables, &c. relating to the Home il Service - - - - - -	143
DIX V.—Military Entrance Examinations - -	235
DIX VI.—Civil Service of India - - - -	305
DIX VII.—Specimens of Examination Papers, Home Civil rvice - - - - - - -	471
DIX VIII.—Correspondence relating to the Home Civil rvice - - - - - - -	549

231

TWENTY-THIRD REPORT.

MAY IT PLEASE YOUR MAJESTY,

WE, Your Majesty's Civil Service Commissioners, humbly offer to Your Majesty this our Twenty-third Report.

In accordance with our usual practice we have appended to this Report a detailed account of the examinations held during the year 1878.

The total number of cases dealt with in that year was 17,055½;* the corresponding number in 1877 having been 15,888. These numbers may be distributed under the following heads:—

	1877.		1878.	
I. Cases falling within the provisions of the Order in Council of June 4th, 1870 -		11,851		11,875
II. Cases not falling within the provisions of this Order, viz.:—				
For Home Services -	912		1,481	
For Indian Services -	496	4,037	534	5,180
For Military Services -	2,629		3,165	
Total - -		15,888		17,055

It will be observed that the increase, amounting to about 7·3 per cent. on the whole number, occurs almost entirely in the cases not falling within the provision of the Order in Council of June 4, 1870, and especially under the heads of Home Services and Military Services. Under the former head it is due to an increase in the number of persons examined, at the request of the Lords of the Admiralty, for promotion in the dockyards; and in the latter to the extended operation of the change introduced in the previous year, whereby the "preliminary" was separated from the "further" or competitive portion of the examination for admission to the Royal Military College.

The following statement shows in a summary form the particulars of the 11,875 Home Civil Service cases dealt with under

* In these and similar statements a candidate who appeared twice (or more) is counted as two (or more) candidates.

the Order in Council in 1878, as compared with the 11,851 cases similarly dealt with in 1877 :—

——	1877.	1878.
Candidates who were passed and certificated - -	4,295	4,609
„ who were rejected on examination -	759	1,469
„ who were ineligible in respect of age -	94	82
„ who were ineligible in respect of health -	117	110
„ who were ineligible in respect of character	73	47
„ who were unsuccessful in competition -	3,505	3,033
„ who passed preliminary test examinations	415	439
„ who failed in preliminary test examinations	390	359
„ who did not proceed to examination -	2,203	1,727
	11,851	11,875

The principal competitions held during the year 1878 were as follows :—

——	Number of		
	Competitions.	Candidates.	Vacancies.
* Under Scheme I. - - - -	3	53	17
* Men Clerkships, Lower Division - -	2	628	171
* Boy Clerkships, Lower Division - -	1	89	22
British Museum :—Assistants - -	3	14	4
Colonial Office :—Ceylon Writerships and Straits Settlements and Hong Kong Cadetships - - - - -	4	48	12
* Constabulary, Royal Irish :—Cadets -	3	23	6
* County Surveyorships in Ireland - -	1	11	1
* Customs :—Out-door Officerships - -	4	1,224	160
Foreign Office :—Clerkships - -	2	11	2
* Foreign Office :—Student Interpreters -	1	53	6
* India Audit Office :—Lower Division Clerks	1	11	3
* India Office :—Book-keeperships - -	1	7	1
* Inland Revenue :—Law Clerks in Solicitor's Office - - - -	2	9	2
* Inland Revenue :—Assistants of Excise -	2	1,223	155
National Education Office, Ireland :—Inspectors of Schools - - - -	3	14	8
* Patent Office :—Indexing and Abridging Clerks - - - - -	1	36	6

* These were open competitions.

	Number of		
	Competitions.	Candidates.	Vacancies.
Post Office :—Female Clerkships - -	14	74	43
Post Office:—Female Returners and Counterwomen - - - - -	2	18	9
Prisons Department (England) - -	2	52	13
* Treasury :—Professional Clerks in the Solicitor's Office - - - - -	1	4	1
* Treasury :—Supplementary Clerks in the Solicitor's Office - - - - -	2	33	3
* Woods, Office of :—Junior Clerks - -	2	26	3
* Woods, Office of :—Supplementary Clerks -	1	7	1
* Works, Office of :—Assistants to Surveyors	2	8	2
* Works, Office of :—Junior Examiner -	1	23	1

It may be observed that the foregoing list includes three limited competitions for appointments in the British Museum, which it was before the practice to fill by nomination, subject to qualifying examination. The rules under which candidates for these situations are now examined, and the results of the three examinations above mentioned, will be found in the Appendix.

The following is a list of the DEPARTMENTS to which LOWER DIVISION CLERKS (Men or Boys) have been assigned in pursuance of the Order in Council of 12th February 1876:—Admiralty; Army Purchase Commission; Charitable Bequests Commission (Ireland); Charity Commission; Chief Secretary's Office, Ireland; Civil Service Commission; Colonial Office; Constabulary, Ireland, Inspector-General's Office; Customs; Dublin Metropolitan Police (Commissioners' Office); Dublin Metropolitan Police (Divisional Offices); Education Department; Exchequer and Audit Office; Fisheries Inspector's Office (Ireland); Friendly Societies Registry; Home Office; Inland Revenue; Judge Advocate General's Office; Local Government Board (England); Local Government Board (Ireland); Lunacy Commission, Scotland; Mint; National Education Office, Ireland; Patent Office; Paymaster-General's Office, including the Chancery Pay Office; Post Office; Prisons Service, Ireland; Prisons Department, Scotland; Privy Council Office; Public Works Loan Office; Public Works Office, Ireland; Queen's and Lord Treasurer's Remembrancer's Office (Scotland); Quit Rent Office, Dublin; Reformatories Office; Registrar-General's Office, England; Registrar-General's Office, Scotland; Registrar-General's Office, Ireland; Science and Art Department; Seamen's Registry Office; Trade (Board of); Treasury; Valu-

* These were open competitions.

ation Office, Ireland; War Office; Office of Woods; Works (Office of).

In pursuance of the provisions of clause 12 of the same Order, 112 appointments were, during the year 1878, made "exceptionally" to the Lower Division of clerks, 70 from the body of writers serving before 4th June 1870, and 42 from those subsequently placed on our register. Four writers of the latter class, who were proposed for appointments, failed in the "supplementary examination" which all such candidates are required to pass. The total number of such exceptional appointments made between the date of the Order and the 31st December 1878 was 324.

The number of copyists examined and registered in the year 1878, as compared with the two previous years, is exhibited in the following statement:—

—	Men.		Boys.	
	Examined.	Registered.	Examined.	Registered.
1876 - -	718	210	201	74
1877 - -	488	117	164	80
1878 - -	1,157	273	326	127

The number on the register on the 31st December 1878 was 1,447 men and 225 boys, and the number in actual employment (as nearly as can be stated), 1,030 men and 185 boys; the difference between the number registered and the number employed being made up almost wholly of copyists who, for the time, were unprepared to serve as such.

Indian Services.

In pursuance of the arrangement mentioned in our twenty-first report, two competitions for the Civil Service of India were held in the year 1878; one at Easter, open to candidates between the ages of 17 and 21, under the rules which were in force in previous years; the other in July, open to candidates between the ages of 17 and 19, under new regulations, of which a copy was appended to the same report. The number of competitors at Easter was 69, and in July 134; the number of vacancies on each occasion being 13. In the previous year the number of vacancies was 30, and the number of candidates 203.

The 30 gentlemen who were selected in 1876 all appeared for their Final Examination in June 1878; and all having been found to possess a competent knowledge of the subjects prescribed, and to be duly qualified in respect of age, health, and character, were certified by us as entitled to appointments.

In July 1878 an open competition was held for admission to the Indian Engineering Service, when 108 candidates competed

for 34 vacancies; the corresponding numbers in 1877 having been as follows:—vacancies 45, candidates 137.

At an examination for admission to the Indian Telegraph Department held at the same time, and in the same subjects, 14 candidates, nominated by the Secretary of State, competed for 8 vacancies.

In November 1878 we held an examination of applicants for admission to the Forest Service of India, at which 5 candidates were selected out of 30 whose names were sent to us by the Secretary of State. At the similar examination in November 1877, 21 candidates were examined by us, and 5 were selected.

Military Services.

The following statement shows the number of candidates for the military services whose cases were dealt with in the year 1878, as compared with the corresponding number in 1877:—

—	Candidates.		Appointments.	
	1877.	1878.	1877.	1878.
1. For the Royal Military College, Sandhurst, or for Commissions in the Army, viz.:—				
(*a.*) General List, including Queen's and Indian Cadets and Pages of Honour -	1,219	1,045	287	337
(*b.*) Candidates from the Militia - -	149	248		
(*c.*) Candidates from the Universities -	56	50		
2. At Preliminary Examinations for the Royal Military College - - - - -	695	1,207	—	—
3. For the Royal Military Academy, Woolwich -	503	453	120	120
4. For Commissions in the Royal Malta Fencible Artillery - - - - -	7	10	—*	—*
	2,629	3,013	407	457

The subjoined list contains the names of the gentlemen who during the year 1878 acted as examiners on various occasions, under the superintendence of our Director of Examinations, Mr. Headlam, and the permanent Assistant Examiners, Mr. Poste and Mr. Butler.

Occasional Examiners.

English Language and Literature; Geography; History, &c.—Matthew Arnold; T. Arnold; Rev. G. D. Boyle; Rev. J. F. Bright; Rev. Stopford A. Brooke; C. W. Chute; W. J. Courthope; H. Craik; Rev. M. Creighton; J. R. Dasent; C. J. Elton; J. G. Fitch; H. R. Francis; FitzEdward Hall, D.C.L.; Rev. A. W. Headlam; Professor T. Rupert Jones; Rev. G. W. Kitchin; J. S. Laurie; Rev. T. H. L. Leary, D.C.L.; A. J. Mackey; J. Marshall; Professor J. M. D. Meiklejohn; H. F. Pooley; C. H. Robarts; T. C. Sandars; Rev. P. Hattersley Smith; W. Stebbing; R. Street; F. C. Walrond; Rev. M. S. A. Walrond; C. Knight Watson; Rev. J. Theed Watson; Rev. R. Whiston; Sir G. Young, Bart.

* This Board was not informed as to the number of appointments.

Greek and Latin Languages.—T. Arnold; R. Booth; Rev. G. G. Bradley, D.D.; C. W. Chute; Rev. C. Evans; Rev. T. Field; Rev. O. Gordon; R. C. Jebb; Rev. Professor B. H. Kennedy; Very Rev. Dean Merivale; Rev. W. W. Merry; C. Neate; R. Ornsby; F. A. Paley; Rev. T. L. Papillon; H. M. R. Pope; Professor J. E. Thorold Rogers; Rev. H. Percy Smith; Rev. R. Whiston.

French.—J. Andrieu; Matthew Arnold; Professor R. Atkinson; A. de Charente; A. Hamonet; Dr. J. F. Kühlke; J. F. P. Massé; A. Roche; A. de la Taille des Essarts; H. Van Laun.

German.—Dr. F. Althaus; Dr. C. A. Buchheim; Dr. A. Hamann; Dr. J. F. Kühlke; Rev. Dr. J. J. Overbeck; Rev. Dr. C. Schoell; Rev. Dr. A. Walbaum.

Italian.—Signor V. Pistrucci.

Spanish.—Señor V. Carrias.

Hindustani.—Fitz-Edward Hall, D.C.L.

Sanskrit.—Professor E. B. Cowell.

Assyrian.—Professor A. H. Sayce.

Mathematics, Pure and Mixed.—W. H. Besant, F.R.S.; J. F. Blake; S. W. Bromfield; A. S. Butler; W. Esson, F.R.S.; W. Garnett; Rev. A. W Headlam; Rev. Canon Heaviside; Professor R. Kalley Miller; B. G. F. Molesworth; W. D. Niven; H. F. Pooley; Rev. P. Hattersley Smith; Professor J. Stuart; J. Todhunter, F.R.S.; Rev. R. Townsend, F.R.S.; Rev. G. S. Ward; Rev. H. W. Watson.

Chemistry; Electricity and Magnetism; Heat and Light; Geology and Mineralogy; Physical Geography.—F. A. Abel, C.B., F.R.S.; Dr. E. Atkinson; J. F. Blake; H. W. Bristow, F.R.S.; Professor P. M. Duncan, F.R.S.; Professor J. W. Judd, F.R.S.; Professor G. D. Liveing.

Crystallography.—Rev. H. P. Gurney.

Botany; Zoology; and Comparative Anatomy.—Rev. M. J. Berkeley; Dr. W. B. Carpenter, C.B., F.R.S.; W. T. Thiselton Dyer; Professor E. Ray Lankester, F.R.S.; Dr. W. Ogle.

Architecture, Civil Engineering, Land Surveying, Practical Geometry, and Geometrical Drawing.—Lieut. G. S. Clarke, R.E.; Major W. H. Collins, R.E.; T. H. Eagles; Major-General C. S. Hutchinson, R.E.; J. B. Redman; Major H. C. Seddon, R.E.; Major Percy Smith, R.E.; W. Castle Turner, C.E.

Mechanics and Mechanism.—Professor W. Cawthorn Unwin.

Fortification.—Major-General C. S. Hutchinson, R.E.

Freehand Drawing.—E. A. Goodall; Rev. W. Kingsley; Rev. R. St. John Tyrwhitt.

Law and Constitutional History.—W. B. Campion; K. E. Digby; C. J. Elton; G. Farwell; J. Hooper; Sir H. S. Maine, K.C.S.I.; J. Muirhead; T. C. Sandars; T. S. Soden.

Moral Sciences, Logic, and Political Economy.—L. Courtney, M.P.; Rev. Professor T. Fowler; Sir A. Grant, Bart.; Professor Bonamy Price; Professor G. Croom Robertson; Professor J. E. Thorold Rogers; T. C. Sandars.

Book-keeping.—E. E. Humphreys.

Shorthand.—W. H. Gurney Salter.

EXAMINERS employed at the PERIODICAL and FINAL EXAMINATIONS of the CANDIDATES selected for the CIVIL SERVICE of INDIA.

Jurisprudence.—T. C. Sandars, Esq.
Law of India, &c.—Sir H. S. Maine, K.C.S.I.
Notes of Cases and Law of Evidence.—Kenelm E. Digby, Esq., and T. S. Soden, Esq.
History and Geography of India.—Claude Erskine, Esq.
Political Economy.—Professor J. E. T. Rogers and T. E. Cliffe Leslie, Esq.
Hindustani.—Fitzedward Hall, Esq., D.C.L., and Professor E. H. Palmer.
Telugu.—J. Goldingham, Esq.
Hindi.—Fitzedward Hall, Esq., D.C.L.
Bengali.—W. S. Seton-Karr, Esq., and Rev. Dr. Mullens.
Marathi.—Rev. A. H. Frost.
Tamil.—Rev. S. Hobbs and E. W. Bird, Esq.
Sanskrit.—Professor E. B. Cowell.
Arabic. } Colonel J. W. J. Ouseley.
Persian. }

All which we humbly submit to Your Majesty's most gracious consideration.

Witness our hands this twelfth day of August One thousand eight hundred and seventy-nine.

HAMPTON.
G. W. DASENT.
T. WALROND.

Appendix I.

		Page
Order in Council,	21st May 1855	2
„	26th April 1862	3
„	5th February 1870	4
„	4th June 1870	5
„	19th August 1871	9
„	19th August 1871	10
„	9th August 1872	11
„	10th December 1875	11
„	12th February 1876	12
„	27th June 1876	17
„	9th December 1876	17
Treasury Minutes, &c.		18

ORDERS IN COUNCIL.

At the Court at Buckingham Palace, the 21st day of May 1855.

PRESENT:

THE QUEEN'S MOST EXCELLENT MAJESTY IN COUNCIL.

ORDER IN COUNCIL. 21 May 1855.

WHEREAS it is expedient to make provision for testing, according to fixed rules, the qualifications of the young men who may from time to time be proposed to be appointed to the junior situations in any of Her Majesty's Civil Establishments.

Now, therefore, Her Majesty, by and with the advice and consent of Her Privy Council, doth order, and it is hereby ordered, that the Right Honourable Sir Edward Ryan, Assistant Comptroller General of the Exchequer, John George Shaw Lefevre, Esquire, Companion of the Bath, Clerk Assistant to the House of Lords, and Edward Romilly, Esquire, Chairman of the Board of Audit, or such other persons as Her Majesty may from time to time approve in the stead of them or any of them, shall be Commissioners for conducting the examination of the young men so proposed to be appointed to any of the junior situations in the civil establishments as aforesaid, and shall hold their offices during the pleasure of Her Majesty, and shall have power, subject to the approval of the Commissioners of Her Majesty's Treasury, to appoint from time to time such assistant examiners and others as may be required to assist them in the performance of the duties herein-after assigned to them.

And it is hereby ordered, that the Commissioners of Her Majesty's Treasury do prepare and submit to Parliament an estimate for the remuneration of a secretary to the said Commissioners, and of such examiners and others as may be required to assist in the performance of their duties.

And it is hereby ordered, that all such young men as may be proposed to be appointed to any junior situation in any department of the Civil Service shall, before they are admitted to probation, be examined by or under the directions of the said Commissioners, and shall receive from them a certificate of qualification for such situation.

And it shall be the duty of the Commissioners in respect of every such candidate, before granting any such certificate as aforesaid,

1st. To ascertain that the candidate is within the limits of age prescribed in the department to which he desires to be admitted;

2d. To ascertain that the candidate is free from any physical defect or disease which would be likely to interfere with the proper discharge of his duties;

3d. To ascertain that the character of the candidate is such as to qualify him for public employment; and,

4th. To ascertain that the candidate possesses the requisite knowledge and ability for the proper discharge of his official duties.

ORDER IN COUNCIL. 21 May 1855.

The rules applicable to each department under each of the above heads should be settled, with the assistance of the Commissioners, according to the discretion of the chief authorities of the department; but, except that candidates for admission to any of the junior situations in any branch of the Civil Service will be required to obtain certificates of qualification as aforesaid, such Examining Board shall not make any alteration in respect to the nomination or appointment of candidates by those who are or may be charged with the duty of nomination and appointment.

After the candidate has passed his examination and received his certificate of qualification from the Commissioners, he shall enter on a period of probation, during which his conduct and capacity in the transaction of business shall be subjected to such tests as may be determined by the chief of the department for which he is intended, and he shall not be finally appointed to the public service unless upon satisfactory proofs of his fitness being furnished to the chief of the department after six months' probation.

And it is lastly hereby ordered, that in case the chief of any department considers it desirable to appoint to any situation for which there are no prescribed limits of age a person of mature age having acquired special qualifications for the appointment in other pursuits, such person shall not in virtue of this Order be required to obtain any certificate from the said Commissioners in order to obtain such appointment, but the chief of the department shall cause the appointment of any person not previously examined to be formally recorded as having been made on account of special qualifications.

(Signed) WM. L. BATHURST.

At the Court at Osborne House, Isle of Wight, the 26th day of April 1862.

PRESENT:

THE QUEEN'S MOST EXCELLENT MAJESTY IN COUNCIL.

ORDER IN COUNCIL. 26 April 1862

WHEREAS by an Order made by the Queen's most Excellent Majesty in Council, on the 21st day of May 1855, Her Majesty, by and with the advice of Her said Council, did order that the Right Honourable Sir Edward Ryan, John George Shaw Lefevre, Esquire, (now Sir John George Shaw Lefevre, Knight Commander of the Bath,) and Edward Romilly, Esquire, or such other persons as Her Majesty should from time to time approve in the stead of them or any of them, should be Commissioners for conducting the examination of the young men proposed to be appointed to any of the junior situations in Her Majesty's Civil Establishments, and should hold their offices at the pleasure of Her Majesty, and should have power, subject to the approval of

ORDER IN COUNCIL. 26 April 1862.

the Commissioners of Her Majesty's Treasury, to appoint from time to time such assistant examiners and others as might be required to assist them in the performance of the duties by the said Order assigned to them.

And whereas since the date of the said Order the said Edward Romilly and Sir John George Shaw Lefevre have severally resigned their said offices of Commissioners to which they were so appointed as aforesaid: And whereas it is deemed expedient that the said Sir Edward Ryan should be appointed First Commissioner for the purpose aforesaid, and that the Right Honourable Sir Edmund Walker Head, Baronet, Knight Commander of the Bath, and the Honourable Edward Turner Boyd Twisleton, should be appointed Commissioners in the place and stead of the said Sir John George Shaw Lefevre and Edward Romilly, Esquire; and further, that the said Commissioners should have power, subject to the approval of the Commissioners of Her Majesty's Treasury, to appoint from time to time a secretary and such assistant examiners and others as may be required to assist them in the performance of their duties.

Now, therefore, Her Majesty, by and with the advice of Her Privy Council, doth order, and it is hereby ordered, that the said Sir Edward Ryan, Sir Edmund Walker Head, and the Honourable Edward Turner Boyd Twisleton, or such other persons as Her Majesty may from time to time approve in the stead of them or any of them, shall be Commissioners, and shall hold their offices during the pleasure of Her Majesty, for the purpose aforesaid, the said Sir Edward Ryan being the First Commissioner; and that the said Sir Edward Ryan, Sir Edmund Walker Head, and the Honourable Edward Turner Boyd Twisleton shall have power, subject to the approval of the Commissioners of Her Majesty's Treasury, to appoint from time to time a secretary and such assistant examiners and others as may be required to assist them in the performance of their duties, and further shall have all powers and authorities given by the said Order.

And it is hereby further ordered, that the Commissioners of Her Majesty's Treasury do prepare and submit to Parliament an estimate for the remuneration of the First Commissioner aforesaid.

And Her Majesty, by and with the advice aforesaid, doth confirm the said Order in all respects, so far as the same is not hereby altered.

(Signed) EDMUND HARRISON.

At the Court at Osborne House, Isle of Wight, the 5th day of February 1870.

PRESENT:

THE QUEEN'S MOST EXCELLENT MAJESTY IN COUNCIL.

ORDER IN COUNCIL. 5 Feb. 1870.

WHEREAS by an Order made by the Queen's most Excellent Majesty in Council, on the 21st day of May 1855, Her Majesty, by and with the advice of Her said Council, did order that the

ORDER IN COUNCIL. 5 Feb. 1870.

Right Hon. Sir Edward Ryan, John George Shaw Lefevre, Esq. (now Sir John George Shaw Lefevre, Knight Commander of the Bath), and Edward Romilly, Esq., or such other persons as Her Majesty should from time to time approve, in the stead of them or any of them, should be Commissioners for conducting the examination of the young men proposed to be appointed to any of the junior situations in any of Her Majesty's Civil Establishments, and should hold their offices at the pleasure of Her Majesty.

And whereas by another Order made by Her Majesty in Council, on the 26th day of April 1862, Her Majesty, by and with the advice of Her Privy Council, did order that the Right Hon. Sir Edmund Walker Head, Bart., and the Hon. Edward Turner Boyd Twisleton should be appointed Commissioners in the place and stead of the said Sir John George Shaw Lefevre and Edward Romilly, Esq.

And whereas, since the date of the said last-mentioned Order, the said Sir Edmund Walker Head has departed this life, and the said Hon. Edward Turner Boyd Twisleton has resigned the said office of Commissioner, and whereas it is deemed expedient that George Webbe Dasent, Esq., Doctor of Civil Law, should be appointed Commissioner in the place and stead of the said Hon. Edward Turner Boyd Twisleton.

Now, therefore, Her Majesty, by and with the advice of Her Privy Council, doth order, and it is hereby ordered, that the said Sir Edward Ryan and George Webbe Dasent, or such other persons as Her Majesty may from time to time approve in the stead of them, or either of them, shall be Commissioners, and shall hold their offices during the pleasure of Her Majesty for the purpose aforesaid, the said Sir Edward Ryan being the First Commissioner, and the said George Webbe Dasent being the Second Commissioner.

And it is further ordered that the Commissioners of Her Majesty's Treasury do prepare and submit to Parliament an estimate for the remuneration of the Second Commissioner aforesaid.

And Her Majesty, by and with the advice aforesaid, doth confirm the said Orders in all respects, so far as the same are not hereby altered.

(Signed) ARTHUR HELPS.

At the Court at Balmoral, the 4th day of June 1870.

PRESENT:

THE QUEEN'S MOST EXCELLENT MAJESTY IN COUNCIL.

ORDER IN COUNCIL. 4 June 1870.

WHEREAS it is expedient to continue, with certain amendments, the existing provision for testing according to fixed rules the qualifications of persons who may from time to time be proposed to be appointed, either permanently or temporarily, to

ORDER IN COUNCIL. 4 June 1870.

any situation or employment in any of Her Majesty's Civil Establishments, except as herein-after mentioned:

I. Now, therefore, Her Majesty, by and with the advice of Her Privy Council, doth order, and it is hereby ordered, that the Right Hon. Sir Edward Ryan, now First Commissioner under Her Majesty's Orders in Council of the 21st of May 1855, and the 26th of April 1862, and George Webbe Dasent, Esq., Doctor of Civil Law, or such other persons as Her Majesty may from time to time approve in the stead of them, or either of them, shall be Her Majesty's Civil Service Commissioners for testing the qualifications of the persons so proposed to be appointed to any situation or employment in the Civil Establishments as aforesaid, and shall hold their offices during the pleasure of Her Majesty; the said Sir Edward Ryan continuing to be the First Commissioner, and the said George Webbe Dasent being the Second Commissioner; and shall have power, subject to the approval of the Commissioners of Her Majesty's Treasury, to appoint from time to time such assistant examiners and others as may be required to assist them in the performance of the duties herein-after assigned to them.

II.* And it is hereby ordered, that (except as may be excepted under clause VII. of this Order, and in the Schedule marked B. annexed hereto) the qualifications of all such persons as may be proposed to be appointed, either permanently or temporarily, to any situation or employment in any Department of the Civil Service shall, before they are employed, be tested by or under the directions of the said Commissioners; and no person (except as aforesaid) shall be employed in any department of the Civil Service until he shall have been reported by the said Commissioners to be qualified to be admitted on probation to such situation or employment.

III. No person shall be appointed to any office or employment in any of Her Majesty's Civil Establishments until he shall be reported by the said Commissioners to have satisfied them—

1st. That he is within the limits of age prescribed for the situation or employment to which he desires to be admitted.

2nd. That he is free from any physical defect or disease which would be likely to interfere with the proper discharge of his duties.

3rd. That his character is such as to qualify him for such situation or employment; and

4th. That he possesses the requisite knowledge and ability to enter on the discharge of his official duties.

IV. The rules applicable to each department, under each of the above heads, shall be settled, subject to the approval of the Commissioners of Her Majesty's Treasury, by the said Civil Service Commissioners and the chief authorities of the Department.

V. Except as herein-after is excepted, all appointments which it may be necessary to make, after the 31st day of August next, to any of the situations included or to be included in Schedule A. to this Order annexed, shall be made by means of competitive

---

The terms of Clause II. are varied by a subsequent Order in Council, *see* page 9.

ORDER IN COUNCIL. 4 June 1870.

examinations, according to regulations to be from time to time framed by the said Civil Service Commissioners, and approved by the Commissioners of Her Majesty's Treasury, open to all persons (of the requisite age, health, character, and other qualifications prescribed in the said regulations) who may be desirous of attending the same, subject to the payment of such fees as the said Civil Service Commissioners, with the consent of the said Commissioners of Her Majesty's Treasury, may from time to time require; such examinations to be held at such periods, and for such situations, or groups of situations in the same or different departments, as the said Civil Service Commissioners, with the approval of the said Commissioners of Her Majesty's Treasury, shall from time to time determine, and to have reference either to the vacancies existing at the time of the examinations respectively, or to the number which may be estimated to occur within any period not exceeding six months after the commencement of the examinations, as the said Civil Service Commissioners, after consultation with the chief authorities of the various departments, and with the approval of the said Commissioners of Her Majesty's Treasury, may deem expedient.

VI.* After the candidate, reported as aforesaid by the Commissioners, has been appointed to an office or employment, he shall enter on a period of probation, during which his conduct and capacity in the transaction of business shall be subjected to such tests as may be determined by the chief of the department to which he is attached, and he shall not remain in the public service after six months from the date of his appointment, unless satisfactory proofs of his fitness shall have been furnished to the chief of such department, and a certificate of his qualification shall have been issued by the Civil Service Commissioners. A formal record of the particulars and of the result of such probation, signed by the chief of the department, shall be furnished to the Civil Service Commissioners, and filed in their office, and they shall thereupon, and not sooner, if such record should be satisfactory, issue their certificate of the candidate's qualification for employment. The candidate after, no less than before, the issue of such certificate shall hold his office at the pleasure of the chief of his department.

VII. In case the chief of a department to which a situation belongs, and the Lords of the Treasury shall consider that the qualifications in respect of knowledge and ability deemed requisite for such situation are wholly or in part professional, or otherwise peculiar, and not ordinarily to be acquired in the Civil Service, and the said chief of the department shall propose to appoint thereto a person who has acquired such qualifications in other pursuits, or in case the said chief of the department and the Lords of the Treasury shall consider that either for the purpose of facilitating transfers from the Redundant List, or for other

* Clause VI. was cancelled by a subsequent Order in Council, another clause being substituted for it, *see* page 9.

ORDER IN COUNCIL. 4 June 1870.

reason, it would be for the public interest that examination should be wholly or partially dispensed with, the Civil Service Commissioners may dispense with examination, wholly or partially, and may grant their certificate of qualification upon evidence satisfactory to them that the said person possesses the requisite knowledge and ability, and is duly qualified in respect of age, health, and character.

VIII. And it is lastly hereby ordered, that the situations mentioned or referred to in the Schedule marked B., hereto annexed, shall be wholly excepted from the operation of this Order, provided that the chief authorities of any department, with the concurrence of the Lords of the Treasury, by notice in the London Gazette, may from time to time add situations to either of the said schedules, or withdraw situations therefrom, or restore thereto situations which may have been withdrawn.

EDMUND HARRISON.

SCHEDULE A.

DEPARTMENTS to which the principle of Open Competition, provided in Clause V. of this Order, is to be applied.*

SCHEDULE A.

Treasury.
Privy Council Office.
Colonial Office.
India Office.
War Office.
Admiralty.
Board of Trade.
Privy Seal Office.
Customs.
Inland Revenue.
Paymaster-General's Department.
Civil Service Commission.
General Post Office (Clerks in Secretary's Department).
Mint.
Exchequer and Audit Department.
General Register Office.
Office of Works.
Office of Woods, &c.
National Debt Office.
Public Record Office.
Stationery Office.
Charity Commission.
Education Office.
Registry of Designs.
Registry of Seamen.
Registry of Joint Stock Companies.
Emigration Office.
University of London.
Science and Art Department.
London Gazette Office.
County Courts Judgments Registry.
Office of Examiners of Criminal Law Accounts.
Queen's and Lord Treasurer's Remembrancer's Office (Scotland).
Chief Secretary's Office (Ireland).
Constabulary Office (Ireland).
Director of Convict Prisons' Office (Ireland).
Office of Inspectors-General of Prisons (Ireland).
General Register Office (Ireland).
Registrar of Petty Sessions Clerks' Office (Ireland).
Inspectors of Lunatic Asylums' Office (Ireland).
Registry of Deeds (Ireland).
Public Works Office (Ireland).
Dublin Metropolitan Police Office.
Divisional Justices' Office, Dublin.

* For departments and situations which have since been added to or withdrawn from Schedule A., *see* p. 130.

ORDER IN COUNCIL. 4 June 1870.

SCHEDULE B.

SCHEDULE B.

SITUATIONS altogether excepted from the operation of this Order.*

1. All situations to which the holder is appointed directly by the Crown.

2. All situations included in any Order or Warrant made by the Commissioners of the Treasury under Section 4. of the Superannuation Act, 1859.

3. All situations which are filled, in the customary course of promotion, by persons previously serving in the same Department.

At the Court at Balmoral, the 19th day of August 1871.

PRESENT:

THE QUEEN'S MOST EXCELLENT MAJESTY IN COUNCIL.

ORDER IN COUNCIL. 19 Aug. 1871.

WHEREAS it is expedient to amend the Order in Council of the 4th June 1870, whereby rules were laid down for testing the qualifications of persons proposed to be appointed to situations or employments in Her Majesty's Civil Establishments.

Now, therefore, Her Majesty, by and with the advice of Her Privy Council, doth order, and it is hereby ordered—

I. In Clause II. of the said Order the words "until he shall "have been reported by the said Commissioners to be qualified "to be admitted on probation to such situation or employment," are hereby cancelled; and instead thereof the words "until a "certificate of his qualification shall have been issued by the Civil "Service Commissioners" shall be substituted.

II. Clause VI. of the said Order is hereby cancelled, and instead thereof shall be substituted the following clause:—

"After the candidate has passed his examination, and his certificate of qualification has been issued by the Commissioners, he shall enter on a six months' period of probation, during which his conduct and capacity in the transaction of business shall be subjected to such tests as may be determined by the chief of the Department for which he is intended, and he shall not be finally appointed to the Public Service unless his six months' probation shall furnish to the head of his Department satisfactory proof of his fitness to be permanently employed in that Department."

III. A report by the Commissioners under the Order in Council of the 4th June 1870, that a person is qualified to be admitted on probation to a situation or employment, if given before the date of this Order in Council, shall, for the purposes of this present Order in Council, be deemed to be a certificate of qualification.

(Signed) EDMUND HARRISON.

---

* For departments and situations which have since been added to or withdrawn from Schedule B., *see* p. 132.

At the Court at Balmoral, the 19th day of August 1871.

PRESENT:

THE QUEEN'S MOST EXCELLENT MAJESTY IN COUNCIL.

ORDER IN COUNCIL. 19 Aug. 1871.

WHEREAS in pursuance of Her Majesty's Order in Council, dated 4th June 1870, Her Majesty's Civil Service Commissioners therein named have framed, and the Lords Commissioners of Her Majesty's Treasury have approved, sundry regulations for testing the qualifications of persons proposed to be appointed to situations or employments in Her Majesty's Civil Establishments, and part of such regulations (viz., the regulations contained in the schedule hereto,) relate to temporary writers, whose services are not confined to any single Civil Establishment, but who represent, to whatever Establishment they may happen for the time being to be attached, the same description of labour:

And whereas it is expedient to place at the service of every Department where temporary writers are for the time being needed persons whose wages and conditions of employment are the same:

Now, therefore, Her Majesty, by and with the advice of Her Privy Council, doth order, and it is hereby ordered as follows, viz.:—

I. That no temporary writers be attached henceforth to any Establishment of Her Majesty's Civil Service except in conformity with the annexed regulations,* or with such further regulations as the said Civil Service Commissioners may, with the concurrence of the Lords Commissioners of the Treasury, issue in execution of their powers in that behalf.

II. That a week's notice, which may, at the discretion of the chief of the Department, be extended to a month's notice, be given to all acting writers (except such as fall within the terms of Clause III. of this present Order) who are not willing to continue their service upon the terms of the regulations hereto appended.

III. That temporary writers heretofore certificated by the Civil Service Commissioners for service in any particular Department, and temporary writers now borne upon the Register of the Civil Service Commissioners who have been respectively serving in the same Department continuously from a date preceding 4th June 1870,† be excepted from Clause II., and be retained, but only so long as their services are required in the same Department, at the salary or wages, and on the other terms, which they were actually receiving, and were actually subject to, on 4th June 1870,† without any addition thereto, or alteration therein, on account of service following that date.

---

* The regulations here referred to have been superseded by others applicable to temporary "copyists" in accordance with the provisions of the Order in Council of 12th February 1876. The new regulations will be found on page 24.

† A subsequent Order in Council, dated 9th August 1872, provides that the above Order is to be read as if the date 19th August 1871 had been inserted instead of this date.

ORDER IN COUNCIL. 19 Aug. 1871.

IV. That Departments connected immediately with Courts of Justice, or with the registration of legal titles or instruments, be excepted from this Order, so long as the chiefs of such Departments shall not have signified their consent to be bound by it.

(Signed) EDMUND HARRISON.

At the Court at Osborne House, Isle of Wight, the 9th day of August 1872.

PRESENT:

THE QUEEN'S MOST EXCELLENT MAJESTY IN COUNCIL.

ORDER IN COUNCIL. 9 Aug. 1872.

WHEREAS it is expedient to amend the Order in Council, dated the 19th day of August 1871, relating to writers in the Civil Service:

Now, therefore, Her Majesty, by and with the advice of Her Privy Council, doth order, and it is hereby ordered as follows, viz.:—

That where the words "4th June 1870" occur in the third clause of the said Order, the words "19th August 1871" be substituted instead thereof.

(Signed) ARTHUR HELPS.

At the Court at Windsor, the 10th day of December 1875.

PRESENT:

THE QUEEN'S MOST EXCELLENT MAJESTY IN COUNCIL.

ORDER IN COUNCIL. 10 Dec. 1875.

WHEREAS by an Order made by the Queen's most Excellent Majesty in Council, on the 4th day of June 1870, Her Majesty did, by and with the advice of the said Council, order that the Right Honourable Sir Edward Ryan, then First Commissioner under Her Majesty's Orders in Council of the 21st of May 1855 and the 26th of April 1862, and George Webbe Dasent, Esq., Doctor of Civil Law, or such other persons as Her Majesty might from time to time approve in the stead of them, or either of them, should be Her Majesty's Civil Service Commissioners for testing the qualifications of the persons proposed to be appointed to any situation or employment in any of Her Majesty's Civil Establishments, except as in the first therein recited Order is excepted, and should hold their offices during the pleasure of Her Majesty, the said Sir Edward Ryan continuing to be the First Commissioner, and the said George Webbe Dasent being the Second Commissioner, and should have power, subject to the approval of the Commissioners of Her Majesty's Treasury, to appoint from time to time such assistant examiners and others as might be required to assist them in the performance of the duties hereinafter assigned to them:

ORDER IN COUNCIL. 10 Dec. 1875.

And whereas, since the date of the said last-mentioned Order, the said Right Honourable Sir Edward Ryan hath departed this life; and whereas it is deemed expedient that the Right Honourable John Somerset Baron Hampton, Knight Grand Cross of the Bath, should be appointed First Commissioner in the place and stead of the said Right Honourable Sir Edward Ryan:

And whereas the number of Commissioners appointed under the said Orders in Council of 21st May 1855 and 26th April 1862, was three, and it is deemed expedient that this number should be restored, and for this purpose that Theodore Walrond, Esq., Companion of the Bath, Secretary to the said late Sir Edward Ryan and to the said George Webbe Dasent, Esq., as such Commissioners as aforesaid, should be appointed Commissioner together with, and in addition to, the said John Somerset Baron Hampton, and the said George Webbe Dasent, Esq.:

Now, therefore, Her Majesty, by and with the advice of Her Privy Council, doth order, and it is hereby ordered, that the said Right Honourable John Somerset Baron Hampton, the said George Webbe Dasent, Esq., and the said Theodore Walrond, Esq., or such other persons as Her Majesty may from time to time approve in the stead of them, or any of them, shall be Her Majesty's Commissioners for testing, in conformity with the said Order in Council, dated 4th June 1870, or such further Order or Orders as Her Majesty, by and with the advice of Her Privy Council, has issued or may issue in that behalf, the qualifications of persons proposed to be appointed to situations or employments in Her Majesty's Civil Establishments, and also for testing, in conformity with regulations to be from time to time issued by Her Majesty's Principal Secretary of State for War, the literary qualifications of candidates for first commissions in the army, and for admission to the Royal Military College at Woolwich, and shall hold their offices during the pleasure of Her Majesty; the said John Somerset Baron Hampton being the First Commissioner, and shall have power, subject to the approval of the Commissioners of Her Majesty's Treasury, to appoint from time to time such assistant examiners and others as may be required to assist them in the performance of their duties.

And it is further ordered, that the Commissioners of Her Majesty's Treasury do prepare and submit to Parliament an estimate for the remuneration of the said additional Commissioner.

(Signed) C. L. PEEL.

At the Court at Windsor, the 12th day of February 1876.

PRESENT:

THE QUEEN'S MOST EXCELLENT MAJESTY IN COUNCIL.

ORDER IN COUNCIL. 12 Feb. 1876.

WHEREAS the civil administration of Her Majesty's Government has, of late years, been greatly extended.

ORDER IN COUNCIL. 12 Feb. 1876.

And whereas the permanent officers by whom the clerical part of such administration is conducted, although necessarily divided into many departments, have, in a great degree, similar duties to perform:

And whereas, in consideration of the premisses, various inquiries have been undertaken, and various measures have been founded upon them, both for the selection and for the classification of the said permanent officers; of which measures the latest is Her Majesty's Order in Council of 4 June 1870, whereby, or by orders and regulations supplementary thereto, the selection of persons for Her Majesty's Civil Service is directed to be made principally by literary competition according to two standards of examination, and the persons so respectively selected are attached either to different offices, or to Higher or Lower Divisions of the same office, according to the examinations passed by them and the duties to be performed:

And whereas it appears from certain recent reports made by the Right Honourable Lyon Playfair and others appointed by the Commissioners of the Treasury to be a Commission for inquiring into various questions connected with the organisation of Civil Departments of the State, that further regulations are required for the division of duties in Her Majesty's civil establishments, and for the selection, pay, and promotion of the officers entrusted with such duties:

Now, therefore, Her Majesty, by and with the advice of Her Privy Council, is pleased to order, and it is hereby ordered, as follows:

1. A Lower Division of the Civil Service shall be constituted. It shall consist of men clerks and of boy clerks, engaged to serve in any department of the State to which they may, from time to time, be appointed or transferred. *The term "Civil Service" in this paragraph, and the same term, and all equivalent terms, throughout this Order, mean such parts only of the said Service as are comprised in the first and second (excluding the third) of the said Reports.*

2. No department throughout Her Majesty's Civil Service shall be permanently increased or regulated afresh, without providing for the introduction of a system whereby such of its duties as are of a suitable character shall be performed by members of the Lower Division.

3. Such situations in Her Majesty's Civil Service as are not suitable to be filled up by members of the Lower Division are excluded from this present Order, and shall, until Her Majesty's further pleasure is declared, be regulated, as now, by the heads of the departments to which they belong, subject to approval by the Commissioners of the Treasury, and conformably to Her Majesty's Orders applicable to them.

4. Promotions shall continue to be made, and salaries to be paid, in the case of all clerks now serving, in like manner as if this Order had never been issued. But no vacancies shall be filled up, nor any new appointments made in any department, except

ORDER IN COUNCIL. 12 Feb. 1876.

by appointing clerks of the Lower Division, until the Commissioners of the Treasury have been satisfied that the number of clerks serving in such department with higher salaries than those of the Lower Division is not in excess of the number sufficient to perform superior duties.

5. The Civil Service Commissioners shall at fixed intervals or whenever they may, with the previous approval of the Treasury, declare it to be necessary, hold competitive examinations for men clerks of the Lower Division, in the subjects included in the scheme of examination* known as "Regulation II.;" and for boy clerks of the Lower Division, in a more limited number of subjects.

Candidates for men clerkships must be over 17 and under 20 years of age. Candidates for boy clerkships must be over 15 and under 17 years of age.

6. Before any such examination is held, the number of permanent clerkships likely to fall vacant within the next six months shall be estimated by the Civil Service Commissioners. This number shall be increased by 10 per cent., and submitted to the Treasury for approval. When it has been approved, the Civil Service Commissioners shall deduct from it the number of unappointed persons (if any) qualified for appointments by previous examinations of the same kind, including examinations under Clause 11 of this Order; and the remainder shall be the number of persons to be selected at the next ensuing examination. This number shall be published as part of the notice of every such examination.

7. A list of the competitors shall be made out, in the order of merit, up to this published number, if so many are found by the examination to be qualified for appointments in the Civil Service.

8. Each competitor named in a list shall remain thereon until he attains the age (if a man) of 25 years, and (if a boy) of 19 years, unless in the meantime he has been appointed to a situation in some public office.

Men on completing their 25th year, and boys on completing the 19th year of their ages respectively, or on receiving appointments, shall be removed from the list.

---

* The subjects of examination under "Regulation II." are as follows; viz.

Preliminary and Obligatory.

1. Handwriting.
2. Orthography.
3. Arithmetic to Vulgar and Decimal Fractions.

Competitive.

Handwriting.
Orthography.
Arithmetic.
Copying MS. (to test accuracy).
Indexing or Docketing.
Digesting Returns into Summaries.
English Composition.
Geography.
English History.
Book-keeping.

ORDER IN COUNCIL. 12 Feb. 1876.

9. From these lists the Civil Service Commissioners, on the application of departments having vacancies, may supply, on probation, the requisite clerks, whether for permanent or temporary duty. Selections shall, as a general rule, be made by the Civil Service Commissioners according to the order of the names on the lists; but the Civil Service Commissioners may select any clerk who, in his examination, has shown special qualifications for any particular subject, among those included in "Regulation II.," if special application for such a clerk be made by any department.

10. No clerk shall remain more than one year in any department unless at the end of that time the head of the department shall signify in writing to the Civil Service Commissioners that the clerk is accepted by the department. If he is not accepted, the department shall report to the said Commissioners the reasons for not accepting him; and such Commissioners shall thereon supply another clerk in his room, and shall decide whether the name of the rejected clerk shall be struck off the list, as unfit for the service generally, or whether he shall be allowed a trial in another department.

11. Boy clerks shall not be retained as such in any department after completing their 19th year; but they may, after two years (or, if admitted after 17 years of age, one year) of good service, to be certified in writing by the head of their department to the Civil Service Commissioners, compete under "Regulation II.," among themselves, for so many men clerkships of the lower division as shall not exceed one-fourth of the number of competitors.

The number of men clerkships reserved for such limited competitions shall be reckoned as part of the total number to be published, pursuant to Clause 6 of this Order.

Separate lists shall be made out of the competitors successful in the limited competitions, and selections for appointments to men clerkships shall (subject to Clause 9 of this Order) be made alternately from these lists and from the lists of competitors successful in the open competitions (Clause 5).

12. Appointments may be made *exceptionally* to the lower division of clerks from the body of writers serving before 4th June 1870, if thoroughly qualified, and from those subsequently registered by the Civil Service Commissioners; provided that the age of these latter did not exceed 30 years at the time of their being placed on the register; that at the date of this present Order in Council, they have served as registered writers for a period of not less than three years; that they produce certificates from the head of the department in which they are serving that it is desirable, in the interest of the public service, to retain and employ them in that same Department; and that they prove their fitness by a supplementary examination.

13. The salaries of men clerks in the lower division shall commence at 80*l.*, and shall rise by triennial increments of 15*l.* to 200*l.* Provided that in any office in which a regular attendance

ORDER IN COUNCIL. 12 Feb. 1876.

of seven hours a day is required, the commencing salary may be 90*l.*, and the maximum salary may be 250*l.*

14. The triennial increments of salary to men clerks shall not be allowed in full without a certificate from the immediate superior of each clerk, countersigned by the head of the department, or by such officer as he may designate for the purpose, to the effect that the clerk's conduct has been in all respects satisfactory. In cases of demerit, a part, or the whole of the increment may be withheld or deferred, according to circumstances.

15. The salaries of boy clerks shall begin at 14*s.* per week, and shall rise by 1*s.* per week per annum as long as they are employed.

16. Extra pay, not exceeding 100*l.* per annum, may be attached to certain situations open to clerks of the lower division whose duties involve the superintendence of other clerks, or are otherwise of a more distinctly responsible character than such as the generality of their colleagues have to perform. The number of such situations in each department, and the amount of extra pay, subject to the maximum of 100*l.*, to be assigned to each such situation, shall be fixed by the head of the department, with the consent of the Commissioners of the Treasury.

17. Situations carrying extra pay shall be conferred strictly according to positive merit, and not according to seniority.

18. Promotion from the lower to the higher division of the Service shall not be made without a special certificate from the Civil Service Commissioners, to be granted exceptionally, after not less than ten years service, upon a special recommendation from the head of the department, and with the assent of the Treasury; and every such promotion, including such recommendation, certificate, and assent, shall be published in the London Gazette, and shall take effect only from and after the date of such publication.

19. Below the lower division of ordinary clerks (including boy clerks) men and boy copyists may be employed for mere copying, and for routine work under direct supervision, on the same conditions of service as those at present in force for Civil Service writers (men and boys). Whenever it is possible, they shall be paid by piece-work, at rates to be fixed by the Civil Service Commissioners, with the consent of the head of the department, and of the Commissioners of the Treasury.

20. All appointments, promotions, and transfers from one office to another shall be notified to the Civil Service Commissioners as they are made, and shall by them be published together in the number of the London Gazette first issued in each month.

C. L. PEEL.

At the Court at Windsor, the 27th day of June 1876.

PRESENT:

THE QUEEN'S MOST EXCELLENT MAJESTY IN COUNCIL.

ORDER IN COUNCIL. 27 June 1876.

WHEREAS Her Majesty's Order in Council, dated 12th February 1876, intituled "Regulations for the Civil Service," is confined to such parts of Her Majesty's Civil Service as are comprised in the first and second (excluding the third) of the Reports made in the years 1874–75 by the Right Honourable Lyon Playfair and others appointed by the Commissioners of the Treasury to be a commission for inquiring into various questions connected with the organisation of Civil Departments of the State.

And whereas it is expedient that discretion should be given to the Commissioners of Her Majesty's Customs, with the previous consent of the Commissioners of the Treasury, to apply the said Order in Council, so far as they may see fit, to such parts of the Customs Service as are comprised in the said Third Report.

Now, therefore, Her Majesty, by and with the advice of Her Privy Council, is pleased to order, and it is hereby ordered, that the said Commissioners of Customs may, so far as they see fit, and with the previous consent of the Commissioners of the Treasury, apply the said Order in Council to the Customs Service accordingly.

C. L. PEEL.

At the Court at Windsor, the 9th day of December 1876.

PRESENT:

THE QUEEN'S MOST EXCELLENT MAJESTY IN COUNCIL.

ORDER IN COUNCIL. 9 Dec. 1876.

WHEREAS Her Majesty's Order in Council, dated 12th February 1876, intituled "Regulations for the Civil Service," is confined to such parts of Her Majesty's Civil Service as are comprised in the first and second (excluding the third) of the Reports made in the years 1874–75 by the Right Honourable Lyon Playfair and others appointed by the Commissioners of the Treasury to be a commission for inquiring into various questions connected with the organisation of Civil Departments of the State.

And whereas it is expedient that discretion should be given to the Commissioners of Her Majesty's Inland Revenue, with the previous consent of the Commissioners of the Treasury, to apply the said Order in Council, so far as they may see fit, to such parts of the Inland Revenue Service as are comprised in the said Third Report.

Now, therefore, Her Majesty, by and with the advice of Her Privy Council, is pleased to order, and it is hereby ordered, that

ORDER IN COUNCIL. 9 Dec. 1876.

the said Commissioners of Inland Revenue may, so far as they see fit, and with the previous consent of the Commissioners of the Treasury, apply the said Order in Council to the Inland Revenue Service accordingly.

C. L. PEEL.

The following Treasury Minutes, &c. referring to the foregoing Orders in Council have been issued:—

Treasury, 27th June 1872.

MINUTE. 27 June 1872.

My Lords advert to an order of Her Majesty in Council, dated 19th August 1871, whereby it was ordered, among other things,—

1. That no temporary writer should be attached thenceforth to any establishment of Her Majesty's Civil Service, except in conformity with certain regulations to the order now in recital annexed, or with such further regulations as the said Civil Service Commissioners might, with the concurrence of the Lords Commissioners of the Treasury, issue in execution of their powers in that behalf.

2. That a week's notice which might, at the discretion of the chief of the department, be extended to a month's notice, should be given to all acting writers (except such as fell within the terms of clause 3 of the order now in recital) who should not be willing to continue their service upon the terms of the regulations thereto appended.

3. That temporary writers theretofore certificated by the Civil Service Commissioners for service in any particular department, and temporary writers at the date of the order now in recital borne upon the register of the Civil Service Commissioners, who had been respectively serving in the same department continuously from a date preceding 4th June 1870, should be excepted from clause 2, and be retained, but only so long as their services were required in the same department at the salary or wages, and on the other terms, which they were actually receiving and were actually subject to on 4th June 1870, without any addition thereto or alteration therein on account of service following that date.

My Lords take notice that many temporary writers were serving in Her Majesty's civil establishments on 4th June 1870, upon terms which included certain annual increments of their wages up to a maximum according to their efficiency and good conduct, and also included certain provisions for terminating their service should it be no longer required.

My Lords further advert to various communications showing that the said last-mentioned writers had, up to the date of the herein-before recited Order in Council of 19th August 1871, generally, although erroneously, construed the said terms to mean that (with the exception of misconduct) the same writers should be retained in employment on their then terms, as long as work of the kind which they had been engaged to do required to be done in the departments where they were employed.

My Lords hold that in order to maintain clearly a distinction between temporary writers and persons serving in an established capacity in the permanent civil service of the state, it was absolutely necessary to substitute such terms as those in the said Order in Council of the 19th August 1871, for the terms which included progressive wages, but, in order to compensate the existing writers, as far as is reasonable, for any disappointment which this alteration in the terms of temporary service may have occasioned to them, my Lords are pleased to direct as follows:—

Every temporary writer, under whatever name, who was on the 4th June 1870 employed in any of Her Majesty's civil establishments, and was engaged upon terms which included progressive wages, shall (subject to the provision by Parliament of the necessary funds) be allowed his choice of the following alternatives:—

(A.) Either to continue in his employment upon the terms laid down in clause 3 of the Order in Council of 19th August 1871; or,

(B.) To retire, receiving a gratuity upon the scale of a pension commuted at five years' purchase under section 7 of the Superannuation Act of 1859, as applied by the Treasury Minute of 14th June 1859.*

Those writers who may elect to receive the gratuities will be eligible for re-employment as writers on the ordinary scale under the regulations contained in the schedule to the Order in Council of 19th August 1871.

TREASURY MINUTE. 27 June 1872.

10th September 1872.

The Chancellor of the Exchequer submits to the Board that in order to secure that uniform effect be given to the Order in Council of 9th August 1872, on the subject of writers, intimation should be conveyed to the chiefs of departments that the Order in question contemplates—

(*a.*) The payment to every writer to whom it applies of the difference between his actual receipts up to the 9th August 1872, and what his receipts would have been had no alteration been made in his old scale, including his increments before 19th August 1871; and,

(*b.*) That he be paid from 9th August 1872, inclusive, at the rate to which his old scale, including his increments, would have brought him on the 19th August 1871, had no change been made in it upon that date.

My Lords approve.

Let a copy of this minute be sent to the heads of the various public departments, in order that they may give effect to the Order in Council in the manner explained above.

TREASURY MINUTE. 10 Sept. 1872.

13th September 1872.

The Lords Commissioners of Her Majesty's Treasury have received several applications from writers to be promoted, as vacancies occur, to the establishment of the department in which they have been serving, and such applicants have referred my Lords to the reply given by the Chancellor of the Exchequer to a question put by Mr. Otway in the

TREASURY MINUTE. 13 Sept. 1872.

---

* Extract from Treasury Minute of 14th June 1859—"With respect to cases of "abolition of office which may arise under clause 7 of 22 Vict. cap. 26, to persons "who shall have served 20 years and upwards, a period of 10 years shall be added "to their actual service in computing their retiring allowance under the circum-"stances described in the clause in question.

"To persons who shall have served under 20 years, and not less than 15 years, a "period of seven years shall be added.

"To persons who shall have served under 15 years, and not less than 10, a period "of five years shall be added.

"To persons who shall have served under 10 years, and not less than five, a "period of three years shall be added.

"To persons who shall have served less than five years an allowance shall be "awarded calculated at the rate of one sixtieth for each year of service, "with an addition of one year or one sixtieth.

"In consideration, however, of the very small allowances which would frequently "have to be granted in these latter cases, my Lords will . . . . . commute "such annual allowances for fixed payments calculated at five years purchase."

TREASURY MINUTE. 13 Sept. 1872.

House of Commons, on the 4th of August, relative to the position of writers employed in public departments.

Their Lordships learn from the Chancellor of the Exchequer that the statement alluded to in your report was of a much more limited character than the applicants' reference to it assumes.

The Chancellor of the Exchequer was not speaking of any general system whereby temporary writers were, as vacancies occur, to be converted into members of the permanent Civil Service, but of a particular class of cases, incident to periods of transition, where the work assigned to writers is discovered to be such as ought to be given to established clerks, and where writers, who have been doing it for some time in a satisfactory manner, are recommended by the heads of departments as fit for the clerkships which are to be created, and are able and willing to pass for admission into them a suitable test examination.

In all cases where either the department is included in Schedule A. of the Order in Council of 4th June 1870, or (as must generally be the case) the writer is over the age fixed for admission into the service, the Lords of the Treasury, supposing them to have consented to the increase of establishment, must further be applied to for their consent to the application of Clause VII. of the same Order to such cases.

Before giving such consent my Lords would look to see what reason any writer so recommended had had to expect any such advancement, and they would not be disposed to suspend the ordinary rules of admission into the department in favour of any writer who, besides satisfying the conditions stated above, had not also something to plead in the way of expectations either held out to him in express terms, or created and encouraged by the receipt of progressive wages. It would obviously be out of the question for the Government to withdraw from the public any portion of those offices which are now open to competition, to the great promotion of education and improvement of the Civil Service.

The Chancellor of the Exchequer was speaking of writers engaged on terms which are no longer continued, and of the means which occasional changes in the organization of departments offer of relieving such men.

It is evident that such a statement as this does not warrant individual writers in making application for promotion to vacancies, but is only an intimation to the heads of departments that whenever a writership has to be converted into a clerkship, there is an opportunity of considering the writer who occupies the post if at the time when he began to serve in the department the then existing rules were more in his favour than now.

Circular issued by the Lords of the Treasury to the heads of the various public departments with reference to the Order in Council of the 12th February 1876

Treasury Chambers, Whitehall,
29th February 1876.

TREASURY CIRCULAR. 29 Feb. 1876.

I AM directed by the Lords Commissioners of the Treasury to call your attention to the 12th clause of the Order in Council of the 12th instant further regulating Her Majesty's Civil Service.

My Lords think it advisable to give effect as soon as possible to the 12th clause, in all departments where there is an opportunity for promoting to clerkships of the new lower division writers who are qualified for such promotion by their age and standing, and are judged to be deserving of it by the heads of the departments in which they are serving.

It will be observed (clause 19) that "mere copying and routine work "done under direct supervision" is to continue to be assigned to persons engaged on the same conditions of service as have been heretofore in force for Civil Service writers. Although, therefore, clerkships are not to be created for the sake simply of providing means of promotion for writers who have no higher work than this to perform, yet no writers should be allowed to continue to perform higher work than this, and clerkships of the new lower division should at once be created to the extent that is necessary for performing all such higher work as is now assigned to writers.

TREASURY CIRCULAR. 29 Feb. 1876.

To take an example. Suppose that at the present time 12 writers are employed in a department, and that besides mere copying and routine work they are performing such a quantity of higher work as would, if separated from the rest, employ three clerks of the new lower division, in that case three such clerkships should at once be created, but before they are thrown open to competition the head of the department may, if he sees fit, select for promotion to them any writers actually serving in the department who fulfil the conditions of clause 12 and possess the necessary qualifications and merit. No writer can claim such promotion as of right. Clerkships not filled up by the promotion of writers will remain for the Civil Service Commissioners to fill up by open competition.

My Lords think it important to fix a limit within which all claims of existing writers for promotion under clause 12 must be settled, and with this view they have fixed 31st August next as the date beyond which they will decline to give their consent (required under clause 7 of the Order in Council of 4th June 1870) to the special admission of any such candidates.

It will, of course, be understood that, as the substitution of clerks of the lower division for writers involves an extension of the establishment, the first step to be taken is to submit a proposal to the Treasury stating precisely how many of such clerkships it is proposed to create at once, and why.

The more general substitution which Mr. Playfair's Commission contemplates of clerks of the lower division for the existing establishments is a further question which will gradually come under review as clause 4 of the recent Order in Council begins to operate. But the cases to which clause 12 refers constitute a special and temporary class, which, for its own sake, should be disposed of without delay, at the same time it affords an opportunity of beginning to put the Order in Council into force.

I have, &c.

Circular issued by the Lords of the Treasury to the Heads of the various public departments with reference to transfers of Clerks of the Lower Division from one department to another.

Treasury Chambers, Whitehall,
20th March 1877.

TREASURY CIRCULAR. 20 March 1877.

I AM directed by the Lords Commissioners of the Treasury to call your attention to the following notice, which is published in the "London Gazette" of 3rd November 1876 (p. 5858), viz. :—

"The Lords Commissioners of Her Majesty's Treasury give notice, that transfers of clerks of the lower division, appointed in pursuance of the Order of Her Majesty in Council dated the 12th day of February

TREASURY CIRCULAR. 20 March 1877.

1876, from one department to another of the Public Service require to be notified to the Treasury for previous approval, and also to the Civil Service Commissioners, in like manner as if such clerks had been appointed under the earlier conditions of the service, with this exception, that they will not be required to pass any further examination provided the situations to which they are transferred have been recognised by the Treasury as proper to be included in the lower division."

The Civil Service Commissioners have called the attention of my Lords to a case in which a transfer of clerks from one department to another, after being sanctioned by the Treasury, was carried into effect *before* notice was given to the Civil Service Commissioners. The Civil Service Commissioners, when such transfers are reported to them, call for the certificates of qualification held by the officers who are being transferred, in order to put upon them the proper endorsements.

The endorsed certificate is necessary to qualify the transferred officer to receive his salary in his new situation, pursuant to clause 2 of the Order in Council of 4th June 1870, and hence it follows that notice of all such transfers should be given to the Civil Service Commissioners before they are actually carried into effect.

I have, &c.

Circular issued by the Secretary, Civil Service Commission, to the Authorities of various Departments, 1876, with reference to the examination of Office keepers, Messengers, &c.

SIR,

Examination of office keepers, messengers, &c.

WITH reference to the correspondence by which the subjects of examination for the situations of office keeper, messenger, &c. in your Department were settled;

I am directed by the Civil Service Commissioners to acquaint you that the question having arisen in a recent case, it was agreed between the Commissioners and the Department concerned, with the approval of the Lords of the Treasury, that it was desirable that for situations of this nature sufficient arithmetic for the keeping of a petty cash book should be regarded as an essential qualification.

Under these circumstances I am to request that you will oblige the Commissioners by informing me whether there is any objection to this rule being applied in your Department to the situations above mentioned.*

I have, &c.

---

* It was subsequently settled in almost all cases that arithmetic should be one of the subjects of examination for situations of this class.

APPENDIX II.

REGULATIONS RESPECTING OPEN COMPETITIVE EXAMINATIONS FRAMED BY THE CIVIL SERVICE COMMISSIONERS, AND APPROVED BY THE COMMISSIONERS OF HER MAJESTY'S TREASURY, BETWEEN 1ST JANUARY 1878 AND 31ST DECEMBER 1878.

	PAGE
Temporary Copyists	24
Clerks, Solicitor's Office, General Post Office, Dublin	26
Clerks, Solicitors' Offices, Treasury, &c.	26
Supplementary Clerks, Solicitors' Offices, Treasury, &c.	27
Indexing and Abridging Clerks, Patent Office	27
Clerks, Solicitor's Office, Inland Revenue, Edinburgh	28
Clerks, Metropolitan Police Courts	28
Extract from Regulations—Apprentices in Her Majesty's Dockyards	29
Extract from Regulations—Engineer Students in Her Majesty's Dockyards	30

*** For the General Regulations respecting Open Competitive Examinations for Situations in the Civil Service, included in Schedule A. of the Order in Council of 4th June 1870, *see* p. 129.

APPENDIX II.

Temporary Copyists.

REGULATIONS RESPECTING OPEN COMPETITIVE EXAMINATIONS FRAMED BY THE CIVIL SERVICE COMMISSIONERS, AND APPROVED BY THE COMMISSIONERS OF HER MAJESTY'S TREASURY, BETWEEN 1ST JANUARY 1878 AND 31ST DECEMBER 1878.

REGULATIONS respecting TEMPORARY COPYISTS in PUBLIC DEPARTMENTS.

*** *Revised Regulations may at any time be issued, which will apply to every Copyist who may accept or renew an engagement after their publication in the London Gazette.*

1. A register of copyists for temporary employment in Public Departments will be kept by the Civil Service Commissioners.

2. This register will contain the names—

(*a.*) Of candidates who, after the ordinary competitions, have been placed on the list of successful competitors for clerkships of the Lower Division, or for situations of assistants of excise, but have not yet received appointments, *provided they signify their wish to the Civil Service Commissioners to be provisionally registered as copyists.*

Men clerks can only be registered as men copyists and boy clerks as boy copyists.

The appointment to permanent situations of candidates thus provisionally placed on the register of copyists will, in the case of clerks of the Lower Division, continue to take effect according to clause 9 of the Order in Council of 12th February 1876.

While they remain upon the register they will be subject to whatever regulations apply to other registered copyists.

(*b.*) Of candidates who, not having competed for clerkships of the Lower Division, or for situations of assistants of excise, or not being placed on the lists of successful competitors, have satisfied the Civil Service Commissioners that they are of good health and character, and that they are duly qualified under the following regulations (3 and 4).

3. The limits of age in the case of candidates not belonging to class (*a*) are:—

For men copyists—over 18.

For boy copyists—14 to 18.

4. The subjects of examination for candidates in class 2 (*b*) are:—

Men Copyists:

OBLIGATORY.*

1. Handwriting.
2. Orthography.
3. Copying manuscript.
4. Copying figures and tabular statements.

OPTIONAL.

5. Arithmetic.

Boy Copyists:

1. Handwriting.
2. Orthography.
3. Elementary arithmetic.

5. Examinations, for the purpose of testing the qualifications of candidates in the above-mentioned subjects, will be held by the Civil Service Commissioners from time to time as may be necessary, and a certain number, regulated by the probable demand from the Public Departments, of those who display the requisite amount of proficiency, will be placed upon the register kept by the Commissioners.

6. The fee payable by persons attending these examinations will be 5*s.* for men and 2*s.* 6*d.* for boys.

---

* Candidates should fully understand that only those who show themselves proficient in the obligatory subjects can be placed upon the register, and that those who do not pass in arithmetic will be excluded from employment where copyists are required for arithmetical work.

Temporary Copyists.

7. Registered copyists will be summoned for employment in any of the Public Departments as they are wanted. When not wanted, they will have no claim to employment. Refusing to serve when called upon, except for reasons satisfactory to the Civil Service Commissioners, they will be removed from the register. The order in which they may be employed, the Departments to which they may be assigned, and their retention generally on the register, will be determined by the Civil Service Commissioners; but they will be subject to the orders of the Departments in which they are serving during the time of their actual employment, and will be liable to dismissal from them by the authorities thereof, without notice, for inefficiency or misconduct.

8. Copyists may be engaged by the hour, day, or week, or by the piece. The engagement of all copyists, not engaged for a shorter period, will be by the week. Copyists engaged for a day or upwards will ordinarily be employed for the number of hours constituting the official day in the Department to which they are attached, but if they are required to give their services after official hours, they must do so, and they will be paid at the same rate, whether by the hour or by the piece, as in the official hours. A copyist refusing to work after official hours on these terms without an excuse satisfactory to the authorities of the Department will be liable to dismissal by them without notice.

9. Men copyists will be paid either at the rate of 10*d.* per hour, or at the rate of $1\frac{1}{2}d.$ for every 100 words well and correctly copied, as the authorities of the Department for which they are required may determine. Other rates for special kinds of work may be determined by the Civil Service Commissioners, with the previous approval of the Commissioners of the Treasury; but copyists, as a rule, are not meant to be employed upon any work except mere copying, or routine work under the direct supervision of established officers.

10. No service, however much it may happen to be prolonged, will confer any claim to superannuation or compensation allowance.

11. The pay of boy copyists will commence at the rate of 4*d.* per hour; an addition of $\frac{1}{2}d.$ per hour may be allowed by the Civil Service Commissioners at the end of each year of approved service. Should any boy copyists be engaged by the piece they will be paid at such rates as may be fixed by the Civil Service Commissioners, with the approval of the Lords Commissioners of the Treasury. Boy copyists will not be retained, as such, after they shall have reached the age of 19.

12. If a public holiday, on which the office is closed, fall within the period of a copyist's engagement, he may be paid in respect of it as for a working day. Copyists may, with the consent of the Department in which they are serving, or, if not at the time serving, with the consent of the Civil Service Commissioners, be allowed holidays, with pay, at the rate for the official day, in the proportion of one day for every 24 full days of actual and approved service previously rendered by them as registered copyists. No copyist shall be allowed to take more than 12 days' leave under these conditions, between the 1st day of January and the 31st day of December, both days inclusive, in any one year. In calculating the leave to be allowed in any given year, no service shall be counted before the 1st day of January of the preceding year.

13. Copyists who may fall ill while serving in any Department, and whose illness may be attested by medical certificate to the satisfaction of the authorities of such Department, may be allowed sick-leave, receiving three-fourths of the rate of pay for the official day; provided such copyists have been borne on the register one year or upwards, and provided that no copyist shall be paid for holidays and sick-leave, taken together, for more than 28 days within any one year, exclusive of public holidays.

14. Except in conformity with regulations 12 and 13, copyists will only receive pay for the hours, or parts of hours, during which they actually attend.

15. No person who has been trained, either wholly or partially, at the public expense, for the occupation of a teacher in schools in connexion with the Committee of Council for Education, or the Board of National Education, Ireland, is eligible for employment as a copyist, until the consent of those Departments, given in conformity with rules sanctioned by the Lords of the Treasury, has been notified to the Civil Service Commissioners. Persons employed in any branch of the public service, whether civil, naval, or military, will not be eligible, unless they shall have produced to the Civil Service Commissioners at or before the time of examination the written consent of the authorities under whom they may be serving.

16. Copyists are not intended to travel during an engagement, nor will they, as a rule, be required to accept engagements at a distance from their residence; but any copyist who may be ordered to travel will be allowed such reasonable and customary expenses as the Lords of the Treasury may in each case approve.

21st January 1878.

Clerk in Solicitor's Office, Post Office, Dublin.

SPECIAL REGULATIONS (supplementary to the General Regulations issued 8th April 1872, and amended by subsequent Notices in the LONDON GAZETTE) respecting OPEN COMPETITIVE EXAMINATIONS for the SITUATION of CLERK in the SOLICITOR'S OFFICE of the GENERAL POST OFFICE, DUBLIN.

N.B.—*These Regulations apply to the present Examination only.*

I. No candidate will be eligible whose age on the first day of the examination is less than 20 or more than 30.

II. No candidate will be eligible to compete who has not been, or is not qualified to be, admitted to practise as a solicitor in Ireland; and no candidate will be eligible for appointment until he has actually been so admitted.

III. The examination will be in the following subjects, viz.:—

Obligatory Subjects:

1. Handwriting.
2. Orthography.
3. Arithmetic (including Vulgar and Decimal Fractions).
4. English Composition.
5. Criminal Law, and Proceedings before Justices of the Peace in Ireland.
6. Law of Evidence.
7. Common Law Procedure and Practice.
8. Elements of Conveyancing.

Optional Subjects:

9. Geography.
10. English History.
11. Latin.
12. French or German.
13. Mercantile Book-keeping.
14. Equity and Practice of the Courts.
15. Bankruptcy and Practice of the Courts.

IV. A fee of 2*l.* will be required from each candidate attending the examination.

Civil Service Commission, S.W.,
4th March 1878.

Clerk in Solicitor's Office, Treasury, &c.

SPECIAL REGULATIONS (supplementary to the General Regulations issued 8th April 1872, and amended by subsequent Notices in the LONDON GAZETTE) respecting OPEN COMPETITIVE EXAMINATIONS for the SITUATION of CLERK in the SOLICITOR'S OFFICE of the TREASURY, POST OFFICE, INLAND REVENUE, and CUSTOMS DEPARTMENTS.

N.B.—*These Regulations are liable to alteration for future Examinations.*

I. No candidate will be eligible whose age on the first day of the examination is less than 20 or more than 30.

II. No candidate will be eligible who has not within the last five years had at least three years experience as a solicitor, or as an articled clerk in a solicitor's office.

III. The examination will be in the following subjects, viz.:—

Obligatory Subjects:

1. Handwriting and Orthography.
2. Arithmetic (including Vulgar and Decimal Fractions).
3. English Composition.
4. Criminal Law, and Proceedings before Justices of the Peace.
5. Law of Evidence.
6. Common Law Procedure and Practice.
7. Elements of Conveyancing.

Optional Subjects:

8. Geography.
9. English History.
10. Latin.
11. French or German.
12. Mercantile Book-keeping.
13. Equity and Practice of the Courts.
14. Bankruptcy and Practice of the Courts.

IV. A fee of 2*l.* will be required from each candidate attending the examination.

Civil Service Commission, S.W.,
26th April 1878.

Supplementary Clerks in Solicitor's Office, Treasury, &c.

SPECIAL REGULATIONS (supplementary to the General Regulations issued 8th April 1872, and amended by subsequent Notices in the LONDON GAZETTE) respecting OPEN COMPETITIVE EXAMINATIONS for the SITUATIONS of SUPPLEMENTARY CLERK in the SOLICITOR'S OFFICE of the TREASURY, UNPROFESSIONAL CLERK in SOLICITORS' OFFICES of the GENERAL POST OFFICE in LONDON and DUBLIN; and SUPPLEMENTARY CLERK in the SOLICITOR'S OFFICE, INLAND REVENUE DEPARTMENT.

N.B.—*These Regulations are liable to alteration for future Examinations.*

I. The limits of age for these situations are 18 and 30, and candidates must be of the prescribed age on the first day of the examination.

II. No candidate will be eligible who has not within the last five years served for at least two years as a clerk (not articled) in a solicitor's office.

III. The examination will be in the following subjects, viz.:—

1. Handwriting.
2. Orthography.
3. Arithmetic (to Vulgar and Decimal Fractions).
4. English Composition.

Candidates failing in any of the above-named subjects will not be eligible.

IV. A fee of 10*s.* will be required from each candidate attending the examination.

Civil Service Commission,
26th April 1878.

Indexing and Abridging Clerks, Patent Office.

SPECIAL REGULATIONS (supplementary to the General Regulations issued 8th April 1872, and amended by subsequent Notices in the LONDON GAZETTE) respecting OPEN COMPETITIVE EXAMINATIONS for INDEXING and ABRIDGING CLERKSHIPS in the PATENT OFFICE.

N.B.—*These Regulations are liable to alteration.*

1. The limits of age for these situations are 21 and 25, and candidates must be of the prescribed age on the first day of the competitive examination.

2. At the competitive examinations exercises will be set in the following subjects only:—

1. Précis.
2. Geometry (Elementary and Practical).
3. Mechanical Drawing.
4. Mechanics and Mechanism.
5. Chemistry.
6. Electricity and Magnetism.
7. Hydrostatics, Hydraulics, and Pneumatics.

Candidates must pass to the satisfaction of the Civil Service Commissioners in one of the subjects numbered 4 and 5 according to the nature of the situation vacant, *i.e.*, according as the duties to be performed render a knowledge of Mechanics and Mechanism or of Chemistry absolutely necessary. The remaining subjects are optional.

3. No candidate can be admitted to the competition who has not previously satisfied the Civil Service Commissioners that he possesses the requisite amount of proficiency in the following subjects:—

1. Handwriting.
2. Orthography.
3. Arithmetic (to Vulgar and Decimal Fractions).
4. English Composition.

With this view, preliminary examinations in these subjects will be held at such times and places as the Commissioners may appoint.

Application for permission to attend one of these preliminary examinations must be made in the writing of the candidate, at such times and in such manner as may be fixed by the Commissioners.

4. A fee of 1*l.* will be required from every candidate attending a preliminary examination, and a further fee of 3*l.* from every candidate who may be admitted to the competition.

Civil Service Commission, London, S.W.,
4th May 1878.

Clerks in Solicitor's Office, Inland Revenue, Edinburgh.

SPECIAL REGULATIONS (supplementary to the General Regulations issued 8th April 1872, and amended by subsequent Notices in the LONDON GAZETTE,) respecting OPEN COMPETITIVE EXAMINATIONS for the SITUATION of THIRD CLASS CLERK in the SOLICITOR'S OFFICE of the INLAND REVENUE DEPARTMENT, EDINBURGH.

N.B.—*These Regulations are liable to alteration for future Examinations.*

I. The limits of age for these situations are 18 and 24, and candidates must be of the prescribed age on the first day of the examination.

II. The examination will be in the following subjects, viz.:—

1. Handwriting.
2. Orthography.
3. Arithmetic.
4. Copying MS. (to test accuracy).
5. English Composition.
6. Geography.
7. Indexing or Docketing.
8. Digesting Returns into Summaries.
9. English History.
10. Book-keeping.
11. Latin.
12. Principles of Scotch Law. [The prominent parts of the leading subjects in the treatises of Bell or Erskine.]

III. A fee of 10*s.* will be required from each candidate attending the examination.

Civil Service Commission,
May 1878.

Clerks in Metropolitan Police Courts.

SPECIAL REGULATIONS (supplementary to the General Regulations issued 8th April 1872, and amended by subsequent Notices in the LONDON GAZETTE) respecting OPEN COMPETITIVE EXAMINATIONS for the SITUATION of CLERK in the METROPOLITAN POLICE COURTS.

N.B.—*These Regulations are liable to alteration for future Examinations.*

1. The limits of age for this situation are 20 and 30. Candidates must be of the prescribed age on the first day of the examination.

2. The examination will be in the following subjects, viz.:—

Obligatory:

1. Reading aloud.
2. Handwriting.
3. Orthography.
4. Arithmetic (including Vulgar and Decimal Fractions).
5. Copying imperfect manuscripts.
6. Indexing or Docketing.
7. Digesting Returns, &c. into Summaries.
8. English Composition.
9. Proceedings before Magistrates (Jervis's Acts).
10. Law of Evidence.
("Powell's Principles and Practice of the Law of Evidence," by Cutler and Griffin, Part I., chapters 1, 2, 3, 4, 5, 6, 7, 8, 12, 17; Part II., chapters 1, 2, 3, 4, and Part III., chapters 1, 2, 6.)
11. Book-keeping by Single Entry.

Candidates failing in any of the above subjects will not be eligible.

Optional:

1. Latin (translation into English, and Grammar).
2. French (translation from and into, and Oral Examination).
3. German (translation from and into, and Oral Examination).
4. Geography and English History.

Not more than one of these subjects can be taken up.

3. Application for permission to attend an examination must be made at such time and in such manner as the Commissioners may appoint.

4. A fee of 2*l.* will be required from each candidate attending the examination.

Civil Service Commission,
4th July 1878.

Extract from the Regulations respecting the Entry of Apprentices in Her Majesty's Dockyards.

Dockyard Apprentices, Admiralty.

1. Vacancies for appointments as apprentices to shipwrights and fitters in Her Majesty's dockyards at Chatham, Sheerness, Portsmouth, Devonport, and Pembroke are open to public competition.

2. The lists of candidates for these situations are kept at the Admiralty in London, and by the superintendents of the dockyards named in paragraph 1, to whom all applications must be sent in before the 1st of March in each year.

3. The candidates must not be less than 14 nor more than 15 years of age on the first day of the examination. Proof of age will be required by the production of a certificate of birth. A declaration before a magistrate, accompanied by a certificate of baptism, will be accepted in those cases only in which it is impossible to procure a certificate of birth. A certificate of baptism cannot be accepted under any other circumstances. The superintendent of the dockyard is to take particular care that no boy's name is forwarded to the Admiralty for examination unless his age is within the prescribed limits.

4. Candidates will be first required to satisfy the superintendents of the dockyards as regards their age, respectability, good character, and physical fitness before they can be considered eligible for entry into the dockyard. Candidates in or near London, and who elect to be examined in London, will be required to satisfy the Admiralty on the points named above. If these conditions are satisfactory, they will then be examined by the Civil Service Commissioners in educational subjects. All candidates must be children of British subjects.

5. Candidates will not be admitted for examination at the dockyards until they have been pronounced fit for Her Majesty's service by the medical officers of the yard. Candidates in or near London may be examined by the Medical Director General of the Navy at the Admiralty. The medical examination will be conducted in all respects in strict accordance with the instructions for examination of persons for admission into the naval service. Candidates should possess the following physical qualifications at the minimum age :—

Height	4 ft. 8 in.
Weight	90 lbs.
Girth of chest	26 ins.

but a deficiency in these requisites will not exclude candidates who may be pronounced by the medical officers to be generally calculated to make efficient workmen. All such cases, however, are to be specially noted in the lists sent to the Admiralty, and the grounds upon which such candidates have been admitted are to be fully stated. All candidates must produce certificates to the satisfaction of the examining medical officers that they have been re-vaccinated, or they must be re-vaccinated before they can be considered eligible for entry into the dockyard.

6. The examination will commence on the first Tuesday in May in each year, and will be held by the Civil Service Commissioners in London as well as at the several dockyards.

7. The following will be the subjects of examination, and the maximum number of marks for each subject :—

Arithmetic	350
Orthography	100
Handwriting	100
Grammar	100
English Composition	100
Geography	100
Euclid, First Three Books	150
Algebra (up to and including Quadratic Equations)	150
Total	1,150

8. Candidates who fail to pass in the first three subjects will be disqualified, and their other papers will not be examined. The candidates who display a competent knowledge of all the subjects named in paragraph 7 will be eligible for appointment in the various trades, according to their position on the examination lists at the several dockyards, and to the number of appointments which it may be decided to make that year.

9. Apprentices will be bound by indentures to serve for seven years, and no candidate will be entered unless some relative or friend is able and willing to undertake the duty of the second party to the indenture as to the support, &c., of the apprentice during his apprenticeship. Board wages will only be allowed in the case of boys whose fathers have died or been killed in service under the Admiralty, and

Dockyard Apprentices, Admiralty.

when it can be proved the family are in distressed circumstances, or in other very special cases.

10. On the expiration of their period of service apprentices will receive a certificate of their character and conduct, the progress they have made in their trade, and in the knowledge of the subjects prescribed for dockyard apprentices.

11. The pay of apprentices serving in the dockyards is as follows:—

	s.	d.	
First year	3	0	a week.
Second year	5	0	„
Third year	7	0	„
Fourth year	9	0	„
Fifth year	11	0	„
Sixth year	13	0	„
Seventh year	15	0	„

12. A limited number of apprentices who have passed five years at the dockyard will be selected annually by competitive examination for study at the Royal Naval College at Greenwich. They will remain there three sessions, passing the vacation each year between the 30th June and the 1st October at one of the dockyards.

13. Those selected for study at Greenwich must join with their parents or guardians in a bond for the sum of 250*l.* to serve under the Admiralty for seven years if required after the completion of their apprenticeship.

14. While at Greenwich, dockyard apprentices will be lodged, and will receive 1*s.* 6*d.* a day towards the mess. They will mess with the acting 2nd class assistant engineers.

They will receive pay as follows:—

	s.	d.	
Those in their first year at Greenwich	21	0	a week.
Second and third years	22	6	„

When at their own dockyards during the vacation they will receive their pay as above, but not the messing allowance. When at other dockyards the messing allowance will be granted.

15. If found well qualified at the completion of their course at Greenwich they may be sent to sea, in one of Her Majesty's ships, for one year, if the Lords Commissioners of the Admiralty think it desirable, and will then be appointed supernumerary draughtsmen, and employed temporarily as assistants to the foremen of the dockyards, or in any other post for which they may be considered fit. In cases where their Lordships do not consider it desirable to send them to sea, they will be at once appointed to situations as above at the several dockyards.

N.B.—The above regulations will be generally followed, but my Lords will modify them from time to time as may be considered desirable.

15th October 1878.

Engineer Students, Admiralty.

EXTRACT from the REGULATIONS respecting the ENTRY of ENGINEER STUDENTS in HER MAJESTY'S DOCKYARDS.

1. Vacancies for appointments as engineer students in the dockyards are open to public competition. The dockyard at which engineer students are entered each year will be fixed by their Lordships.

2. The list of candidates for these appointments will be kept at the Admiralty in London. All applications for the forms to be filled up by persons who wish to compete must be sent to the Secretary of the Admiralty on or after the first of January in each year, and care must be taken that the forms when filled up are returned to the Admiralty *before the first of March following*, as no notice will be taken of forms received after that date.

3. Candidates must not be less than 14 nor more than 16 years of age on the first day of the examination, and *no exception to these limits of age will be made in favour of any candidate.*

4. Proof of age will be required by the production of a certificate of birth. Evidence of respectability and good character must also be produced. All candidates must be children of British subjects.

5. In any exceptional case where it can be shown to the satisfaction of the Admiralty that it is impossible to procure a certificate of birth, my Lords will accept a certificate of baptism, accompanied by a declaration of the date of birth to be made before a magistrate by the parent or guardian of the candidate. A certificate of baptism cannot be accepted under any other circumstances.

6. Candidates are to understand clearly that they will be first required to satisfy the Admiralty as regards their age, respectability, good character, and physical fitness, before they can be considered eligible for entry into the dockyard, and if these conditions are satisfactory, they will then be examined by the Civil Service Commissioners in educational subjects. Engineer Students, Admiralty.

7. Candidates in or near London will be medically examined by the Medical Director-General of the Navy at the Admiralty. Those residing near one of Her Majesty's dockyards, or one of the first reserve ships, or drill ships of the Royal Naval Reserve, or the flagship at Queenstown, will be examined by the medical officers attached thereto. Special arrangements will be made, if necessary, on application, with reference to candidates from more distant localities. The medical examination will be conducted in all respects in strict accordance with the instructions for the examination of persons for admission into the naval service. All candidates at the time of their medical examination must produce certificates to the satisfaction of the examining officers that they have been re-vaccinated, or they must be re-vaccinated before they can be considered eligible for entry into the dockyard.

8. The examination will commence on the first Tuesday in May in each year, and will be held by the Civil Service Commissioners in London, Liverpool, Portsmouth, Devonport, Bristol, Leeds, Newcastle-on-Tyne, Edinburgh, Glasgow, Aberdeen, Dublin, Belfast, and Cork.

9. The following will be the subjects of examination, and the maximum number of marks for each subject :—

*Arithmetic			300
English—			
*Handwriting	40		
*Accuracy and intelligence in Writing from Dictation	60		
*Composition	100		
Grammar	150		
		350	
French—			
Translation into English	100		
Grammar	50		
		150	
Geography			100
Algebra (up to and including Quadratic Equations)			300
Geometry (the subjects of Books I. to IV. and Book VI. of Euclid's Elements, and the definitions of Book V.)			300
Total			1,500

Candidates will also be tested as to their ability to read aloud with clearness, distinctness, and accuracy, and without hesitation. Stammering, or any imperfection of utterance, will be regarded as a disqualification.

10. Candidates who fail to pass in the first four subjects (those marked with an asterisk), or in reading aloud, will be disqualified, and their other papers will not be examined. The candidates who obtain not less than 750 marks in the aggregate will be classed in one general list in order of merit, according to the number of marks gained, and will be eligible for appointment as engineer students in one of the dockyards, according to the number of appointments which it may be decided to make that year.

11. The candidates who obtain appointments will be entered as engineer students before the 1st July in each year, and must join with their parents or guardians in a bond for 300*l.* to enter, if required, into Her Majesty's Naval Service as assistant engineers, if at the expiration of their training they should obtain certificates of good conduct and efficiency for entry in that capacity. These bonds, and the indentures of apprenticeship, must be completed in all respects before the students join the dockyard.

12. The parents or guardians of all engineer students entered in future will be required to pay the sum of 25*l.* a year for each student during the first three years of his training.

13. The first payment of 25*l.* is to be made before the student is entered in the yard, and the second and third payments of 25*l.* each are to be made on or before the 30th day of June in each of the two succeeding years. The payments are to be made to the cashier of the yard to which the student is appointed. In case of failure of payment the student will be discharged.

14. Board and lodging will be provided for engineer students, and they will be required to reside in one of the dockyards or in a vessel adjacent thereto.

Engineer Students, Admiralty.

15. The weekly pay of engineer students during their training will be as follows, provided they are well reported on by the officers:—

First year	-	One shilling
Second „	-	Two shillings
Third „	-	Three „
Fourth „	-	Five „
Fifth „	-	Eight „
Sixth „	-	Ten „

a week.

16. Three weeks leave (18 working days) on full pay will be granted each year to all engineer students whose conduct and progress have been satisfactory. This leave is to be taken during the school vacations at Midsummer and Christmas.

17. Engineer students will be under the supervision of the Captain of the Steam Reserve and a staff of competent officers, and subject to such rules and regulations as their Lordships may deem necessary.

18. Special regulations will be made for engineer students in the dockyards, so as to make a distinction between them and the workmen.

19. Engineer students will remain for six years at one of the dockyards for practical training in the workshops, and to receive instruction in iron shipbuilding. While the engineer students are being instructed in iron shipbuilding they are to be under the direction of the chief constructor. They will attend the dockyard schools for such periods, and to pursue such studies as may from time to time be determined on; they will also pass a portion of their time in the drawing office. Means will be afforded them of acquiring the groundwork of the knowledge required by a naval engineer respecting the working of marine engines and boilers, including those repairs which can be carried out afloat, the practical use of the various instruments used in the engine-room, including the indicator, and of becoming generally acquainted with the duties of a naval engineer.

20. Engineer students will be examined once a year under the direction of the President of the Royal Naval College. They will be examined by the engineer officers of the Admiralty at the end of the fourth, fifth, and sixth years of their service as to their practical acquirements and knowledge of steam machinery. Two prizes will be given annually at each dockyard to the engineer students most highly reported on as regards their skill as workmen. Practical engineering will be considered an essential subject at examinations, and in the lists showing the results of examinations the numbers obtained in practical subjects will be shown distinct from those obtained in educational subjects. No engineer student will be granted a qualifying certificate for entry at the Royal Naval College unless he obtains at least 50 per cent. of the total number of marks for practical engineering on his final examination, and also displays a competent knowledge of the subjects taught in the dockyard schools.

21. The examination of the sixth year students is to be held in time for the necessary certificates to be forwarded to the Admiralty on or before the 23rd June in each year, and it will include tests of their skill as workmen. Those found qualified will, on the completion of their term of service at the dockyards, proceed to the Royal Naval College at Greenwich as acting assistant engineers on probation on the 1st October succeeding the examination, where they will pass through a course of higher instruction.

22. Those engineer students who fail to pass the examination at the end of their six years' service will be allowed to remain one year longer at the dockyards, and will then be re-examined, when, if they are unable to pass, they will cease to be eligible for the rank of naval engineer. The pay of a student during such year of probation will be the same as during the sixth year.

23. Engineer students will not be entered as acting assistant engineers until they have been pronounced fit for Her Majesty's naval service by the medical officers, and have learned to swim.

24. Acting assistant engineers will be provided with quarters while at Greenwich. During their first session they will be paid 6*s*. a day and 1*s*. 6*d*. a day towards the mess expenses. Those selected for further study will receive their full pay and 1*s*. 6*d*. a day towards the mess.

25. The period of study at Greenwich will be one session extending from the 1st October to the 30th June following. All will be examined under the direction of the President of the Royal Naval College on the completion of their course at Greenwich, and will receive certificates according to their merit, in three classes. Those who obtain first class certificates will receive commissions dated the same day as their acting appointments. Those who obtain second class certificates will receive commissions dated six months after the date of their acting appointments, and those who obtain third class certificates will receive commissions dated the day after their discharge from the Royal Naval College. The additional time given for first class

certificates and second class certificates will reckon in all respects as time served as assistant engineer. Engineer Students,

26. Two assistant engineers will be selected annually from those who take the highest place at the examination on the completion of their course at Greenwich, to pass through a further course of scientific instruction if they desire it. These two will be allowed to remain two more sessions at Greenwich, on the completion of which they will be sent to sea as assistant engineers, and after one year's service at sea they will be considered eligible to fill positions in the dockyards and at the Admiralty. Admiralty.

27. Those passing the second and third sessions at Greenwich will be attached during the vacations between the 30th June and 1st October to the dockyards or steam reserves, where they will be employed sketching machinery, attending trials of new and repaired engines, and gaining such professional information as will be most useful to them for the purposes of engine design.

28. No assistant engineer who has passed three sessions at Greenwich will be allowed to leave Her Majesty's Service within seven years of the completion of his term at Greenwich, unless he shall pay the sum of 500*l.* to defray the charges of his education. Such resignation to be subject in each case to their Lordships' approval.

Uniform, Books, Sea Chest, &c.

29. Engineer students are to be provided with—

1 uniform tunic
1 „ trowsers } blue cloth.
1 „ waistcoat
1 „ thick double-breasted warm overcoat.
1 „ cap, peak half turn down, with usual device of the civil branch.
2 working uniform suits of blue serge.
8 buttons placed by 4 to be worn on the breast of the tunic, and a single purple velvet stripe round the sleeve of the tunic.

Patterns of the several articles of uniform are kept and can be seen at the offices of the Naval Commanders-in-Chief at Sheerness, Portsmouth, and Devonport.

1 sea chest complete, with name in full painted on top.

	Ft.	Ins.
Length - - - - -	3	6
Breadth - - - - -	2	0
Height - - - - -	2	3

30. The above are to be provided at the expense of the engineer students, their parents or guardians, as well as all other articles of clothing and necessaries.

31. Copies of the authorised text books necessary for use in the dockyard schools will be supplied gratuitously to the engineer students, but all losses will have to be made good. The books will become the property of the engineer students when they leave school, free of charge.

Medical Examinations.

32. With a view to prevent parents and guardians from incurring the inconvenience and expense of preparing candidates for entry as engineer students in Her Majesty's dockyards who may be physically unfit for Her Majesty's Service, it is suggested that the candidates be submitted to examination by the medical adviser of the family, or any other qualified medical practitioner, to whom the following points may be submitted as those upon which they will, previous to their educational examination, be physically examined by naval medical officers.

33. It is to be understood that this private examination is merely suggested as a guide to parents and guardians, and to lessen the chances of disappointment, and that it is by no means intended to take the place of, or to influence in any way, the regular official physical examination.

34. A weak constitution, arising from imperfect development or weakness of the physical powers of the body, either hereditary or from chronic disease, wounds, or injuries.

35. Chronic eruptions on the skin or scalp.

36. Malformation of the head, with a dry, harsh, divergent state of the hair of the scalp, fracture or depression of the bones of the skull, disordered intellect, imbecility, epilepsy, paralysis, or impediment of speech.

37. Blindness or defective vision, as tested by Snellen's test types, in one or both eyes, fistula lachrymalis, and ptosis.

38. Impaired hearing, or discharge from one or both ears disease or thickening of the lining membrane of the external ear.

Engineer Students, Admiralty.

39. Disease of the bones of the nose or of its cartilages, and polypus.

40. Disease of the throat, palate, or tonsils; unsound teeth, offensive breath from constitutional causes, unhealthy gums, scrofulous diseases of the glands of the throat or neck, external cicatrices from scrofulous sores.

41. Functional or organic disease of the heart or blood vessels, deformity or contraction of the chest, flattening of the sub-clavicular regions, phthisis, hæmoptysis, bronchitis, dyspnœa, aphonia, chronic cough, or other symptoms of tubercular exudation into the pulmonary tissues.

42. Swelling or distension of the abdomen, undue obesity, disease or enlargement of the liver, spleen, or kidneys. Rupture, weakness or distension of the abdominal rings; vesical weakness, or incontinence.

43. The existence of any congenital defect, or of varicocele.

44. Any disease of or pertaining to the alimentary canal.

45. Paralysis, weakness, impaired motion, or contraction of the upper or lower extremities, from whatever cause; aneurism, a varicose state of the veins, especially of the leg. Bunions, distortion, malformation of the feet, or malposition of the fingers or toes.

46. Distortion of the spine, of the bones of the chest, or pelvis, from injury or constitutional defect.

N.B.—The above regulations will be generally followed, but my Lords will modify them from time to time as may be considered desirable.

18th November 1878.

Appendix III.

LIMITS OF AGE AND SUBJECTS OF EXAMINATION.

[*Corrected up to December* 31, 1878. *Additions and alterations made after this date and up to the time of going to press will be found stated on the last page.*]

General Notices.

1.—The Civil Service Commissioners can give no information as to salaries, duties, course of promotion, pensions, &c., except such as may be contained in published regulations and similar documents.

2.—The Commissioners cannot advise candidates as to their course of reading, nor can they recommend particular tutors or places of education. Except where otherwise stated in the scheme of examination, no particular text-books are prescribed or recommended.

3.—All exceptions which can be admitted to the ordinary limits of age are specified in the following pages: where no exceptions are specified, none are allowed.

4.—The Commissioners cannot undertake to answer inquiries relating to cases which are not officially before them for decision, nor can they decide, except in the cases of actual candidates, questions respecting the application of the rules contained in the following pages.

5.—Particular answers cannot be given to inquiries which are answered expressly, or by implication, in published regulations and similar documents.

6.—The Commissioners cannot undertake to send answers by telegraph notwithstanding that a reply may have been paid for.

7.—The Commissioners do not supply specimens of the examination papers used in any of their examinations, but copies of some of these papers are usually appended to the annual reports of the Commissioners,* and some are separately published from time to time, and may then be obtained through any bookseller.

8.—Notice of any Open Competitive Examinations which may be appointed to be held will be given by advertisement in some of the principal London and Provincial newspapers. The advertisements in the London papers will usually appear on *Thursdays*. The Commissioners can in no case record the names of intending candidates until a particular examination is announced, nor can they undertake to send a separate notice to any particular person.

---

* *See* Appendix VII.

EXPLANATION OF ABBREVIATIONS, &c.

*** The complete Regulations respecting situations marked "Sch. A." or "O. C." in this Abstract may be obtained on application.

[**SCH. A.**] Situations thus marked are included in "Schedule A." of the Order in Council of June 4, 1870, and are therefore open to competition under regulations framed or to be framed, in pursuance of Clause V. of that Order, by the Civil Service Commissioners, with the approval of the Lords of the Treasury. The "General Regulations" printed at p. 129 apply to all such competitions.

[**O. C.**] Situations thus marked are open to competition, independently of the clause above mentioned. Such competitions are not subject to the "General Regulations."

[**L. C.**] Situations thus marked are filled by "limited competition" among candidates nominated by the heads of the Departments to which they belong.

[**N.**] Situations thus marked are usually filled by nomination, subject to a qualifying examination only, but they may be offered for competition at the discretion of the head of the Department.

[**N. Cl. vii.**] For situations thus marked certificates are granted under Clause VII. of the Order in Council of the 4th June 1870, which empowers the Commissioners to dispense wholly or partially with examination on evidence satisfactory to them that the candidate possesses the requisite qualifications.

NOTE (*a*).—Some situations for which separate schemes of examination are here set down will probably be filled hereafter by clerks of the "Lower Division." *See* clauses 1–4 of the Order in Council of 12th February 1876 (p. 13).

TABLE OF RULES AND REGULATIONS.

SUBJECTS OF EXAMINATION AND LIMITS OF AGE.

*** In all cases where not otherwise ordered, candidates are required to be of the prescribed age on *the first day of their examination*. The manner in which the limits of age are understood by the Civil Service Commissioners is shown by the following example:—

If the rule is that persons must be between 17 and 20 years of age on the 1st of January in any year, a candidate born on the 1st January would be admitted on the 17th, and also on the 20th anniversary of his birth, but not on the day preceding the former, nor on the day succeeding the latter of these anniversaries.

	Limits of Age.	Fee for Examination.
OPEN COMPETITIVE EXAMINATIONS FOR CLERKSHIPS (CLASS I.) IN THE CIVIL SERVICE. [SCH. A.]†	18 and 24*	
PRELIMINARY EXAMINATION. 1. Handwriting. 2. Orthography. 3. Arithmetic (to Vulgar and Decimal Fractions). 4. English Composition.		1*l.*
COMPETITION:— Marks. English Composition (including Précis Writing) - 500 History of England (including that of the Laws and Constitution) - - - - 500 English Language and Literature - - 500 Language, Literature, and History of Greece - 750 " " " Rome - 750 " " " France - 375 " " " Germany - 375 " " " Italy - - 375 Mathematics (Pure and Mixed) - - - 1,250 Natural Science: that is (1) Chemistry, including Heat; (2) Electricity and Magnetism; (3) Geology and Mineralogy; (4) Zoology; (5) Botany 1,000 *** The total (1,000) marks may be obtained by adequate proficiency in any two or more of the five branches of science included under this head. Moral Sciences: that is, Logic, Mental and Moral Philosophy - - - - - 500 Jurisprudence - - - - - 375 Political Economy - - - - 375 Candidates will be at liberty to offer themselves for examination in any or all of these subjects. No subjects are obligatory.		5*l.*

* By the 4th of the General Regulations (*see* p. 129) it is provided that in reckoning age for competition the following allowances will be made, viz., (1) members of the military and naval services (whether commissioned or non-commissioned) may deduct from their actual age any time during which they have served; (2) persons who have served for two full consecutive years (*a*) in any Civil situation to which they were admitted with the certificate of the Civil Service Commissioners, (*b*) in the Royal Irish Constabulary, or (*c*) as registered copyists in connexion with the Civil Service, may deduct from their actual age any time not exceeding five years which they may have spent in such service. Similar provisions are contained in the Regulations applicable to Lower Division Clerkships.

† The following is a list of departments to which Class I. clerks have been assigned:—Civil Service Commission; Colonial Office; Ecclesiastical Commission; India Office (Correspondence Department); Lunacy Commission; Patent Office; Post Office (Secretary's Office, Grade I.); Record Office, England; Record Office, Ireland; Treasury; Inland Revenue (Assistant Surveyor of Taxes).

	Limits of Age.	Fee for Examination.
OPEN COMPETITIVE EXAMINATIONS FOR MEN CLERKSHIPS OF THE LOWER DIVISION IN THE CIVIL SERVICE.	17 and 20. *See* Note * on p. 37.	
PRELIMINARY EXAMINATION. 1. Handwriting. 2. Orthography. 3. Arithmetic (to Vulgar and Decimal Fractions).		15*s.*
COMPETITION:— Handwriting. Orthography. Arithmetic. Copying MS. (to test accuracy). English Composition. Geography. Indexing or Docketing. Digesting Returns into Summaries. English History. Book-keeping.		5*s.*
OPEN COMPETITIVE EXAMINATIONS FOR BOY CLERKSHIPS IN THE LOWER DIVISION OF THE CIVIL SERVICE. 1. Handwriting. 2. Orthography. 3. Arithmetic, including Vulgar and Decimal Fractions. 4. Copying MS. to test accuracy. 5. English composition. 6. Geography. No Candidate will be eligible who does not satisfy the Civil Service Commissioners of his competency in handwriting, orthography, and arithmetic.	15 and 17.	10*s.*
TEMPORARY MEN-COPYISTS IN PUBLIC DEPARTMENTS. *Obligatory.* 1. Handwriting. 2. Orthography. 3. Copying Manuscript. 4. Copying Figures and Tabular Statements. *Optional.* 5. Arithmetic.	over 18.	5*s.*
TEMPORARY BOY-COPYISTS IN PUBLIC DEPARTMENTS. 1. Handwriting. 2. Orthography. 3. Elementary Arithmetic.	14 and 18.	2*s.* 6*d.*

* The following is a list of the Departments to which Lower Division Clerks (men or boys) have been assigned:—Admiralty; Army Purchase Commission; Charitable Bequests Commission (Ireland); Charity Commission; Chief Secretary's Office, Ireland; Civil Service Commission; Colonial Office; Constabulary, Ireland, Inspector-General's Office; Customs; Dublin Metropolitan Police (Commissioners' Office); Dublin Metropolitan Police (Divisional Offices); Education Office; Exchequer and Audit Office; Fisheries Inspector's Office, Ireland; Friendly Societies Registry; Home Office; Inland Revenue; Judge Advocate General's Office; Local Government Board (England); Local Government Board (Ireland); Lunacy Commission, Scotland; Mint; National Education Office, Ireland; Patent Office; Paymaster-General's Office, including Chancery Pay Office; Post Office; Prisons Service (Ireland); Prisons Department, Scotland; Privy Council Office; Public Works Loan Office; Public Works Office, Ireland; Queen's and Lord Treasurer's Remembrancer's Office (Scotland); Reformatories' Office; Registrar-General's Office, England; Registrar-General's Office, Scotland; Registrar General's Office, Ireland; Science and Art Department; Seamen's Registry Office; Trade (Board of); Treasury; Veterinary Department; War Office; Office of Woods (Quit Rent Office, Dublin); Works (Office of.)

Department, and Qualifications required.	Limits of Age.	Fee for Examination.
TEMPORARY MEN-MESSENGERS IN GOVERNMENT DEPARTMENTS.		
1. Reading. 2. Writing.	over 20.	2*s.* 6*d.*
TEMPORARY BOY-MESSENGERS IN GOVERNMENT DEPARTMENTS.		
1. Reading. 2. Writing.	13 and 15.	1*s.*
ADMIRALTY.		
I. [O. C.] MEN AND BOY CLERKS OF THE LOWER DIVISION.		
II. [M.] DRAUGHTSMEN IN THE CONTROLLER'S DEPARTMENT. 1. Handwriting and Orthography. 2. Arithmetic, including Vulgar and Decimal Fractions. 3. Mensuration of Surfaces and Solids. 4. Algebra, including the Binomial Theorem and Logarithms. 5. Euclid (first four and sixth books). 6. Statics and Dynamics (Elementary). 7. Plane Trigonometry (Elementary). 8. Précis, or Digest of Papers or Correspondence. 9. Geometrical Drawing. 10. Practical Engineering. 11. Steam and the Steam Engine. 12. Engine Design and Calculations. 13. Skill and correctness in making Drawings and general calculations.	21 and 25.	
III. [SCH. A.] ARCHITECTURAL DRAUGHTSMEN IN THE DEPARTMENT OF THE DIRECTOR OF WORKS.	21 and 25. *See* Note * on p. 37.	
Part I.—Preliminary.		10*s.*
1. Handwriting. 2. Orthography. 3. Arithmetic (including Vulgar and Decimal Fractions).		
Part II.—Competitive.		3*l.*
1. Practical Geometry. 2. Algebra to Quadratic Equations, including Progressions and Logarithms. 3. Rudimentary Mechanics. 4. History and Styles of Architecture. 5. Drawings and Design of Architectural Works. 6. Drawings and Design of Architectural Ornament.		

Department, and Qualifications required.	Limits of Age.	Fee for Examination.
ADMIRALTY—*continued.*		
ARCHITECTURAL DRAUGHTSMEN—*cont.* 7. Perspective Drawing. 8. Architectural Water Colour Drawing. 9. Strength of Materials of Construction. 10. Use of Materials of Construction. 11. Details of Construction in Foundations, Masonry, Brickwork, Carpentry, Ironwork, Joinery, Plumbery, &c. 12. Details of Architectural Work. 13. Specifications for Architectural and Building Works. 14. Measurement of Quantities in Building Works. 15. Estimates of Cost of Building Works. 16. Any one Modern Language. Candidates must pass to the satisfaction of the Commissioners in the subjects numbered 1 to 15. The remaining subject is optional. Candidates will be required to show what preliminary training or technical education they have undergone to qualify themselves for a situation of this nature. Evidence on this point must be sent in at least a week before the date of the examination. If it prove primâ facie satisfactory, the Candidate will be admitted to examination, subject to such further inquiry as may be necessary.		
IV. [SCH. A.] ENGINEERING DRAUGHTSMEN IN THE DEPARTMENT OF THE DIRECTOR OF WORKS. *Part I.—Preliminary.* 1. Handwriting. 2. Orthography. 3. Arithmetic (including Vulgar and Decimal Fractions). *Part II.—Competitive.* 1. Practical Geometry. 2. Algebra to Quadratic Equations, including Progressions and Logarithms. 3. Rudimentary Mechanics. 4. Drawings and Design of Engineering Works. 5. Drawings and Design of Ironwork. 6. Drawings and Design of Ordinary Machinery. 7. Calculations of Stability and Strength of Structures. 8. Calculations (Graphic) of Strains on Braced Structures. 9. Calculations of Strength of Materials of Construction. 10. Calculations of Power and Work of Machines. 11. Use of Materials of Construction. 12. Details of Construction in Earthwork, Foundations, Brickwork, Masonry, Carpentry, &c. 13. Details of Construction in Ironwork. 14. Details of Construction in Hydraulic Engineering Works. 15. Specifications for Engineering Works. 16. Measurement of Quantities in Engineering Works. 17. Estimates of Cost in Engineering Works. 18. Levelling and Surveying. 19. Any one Modern Language. Candidates must pass to the satisfaction of the Commissioners in the subjects numbered 1 to 18. The remaining subject is optional. Candidates will be required to show what preliminary training or technical education they have undergone to	21 and 25. *See* Note * on p. 37.	10*s.* 3*l.*

Department, and Qualifications required.	Limits of Age.	Fee for Examination.
ADMIRALTY—*continued.*		
ENGINEERING DRAUGHTSMEN—*cont.* qualify themselves for a situation of this nature. Evidence on this point must be sent in at least a week before the date of the examination. If it prove primâ facie satisfactory, the Candidate will be admitted to examination, subject to such further inquiry as may be necessary.		
V. [SCH. A.] DRAUGHTSMEN IN THE HYDROGRAPHICAL DEPARTMENT. 1. Handwriting and Orthography. 2. Arithmetic (including Vulgar and Decimal Fractions). 3. Geography. 4. Practical Geometry (so far as relates to perpendiculars, parallels, the mode of dividing lines, and of determining a position from two or more angles). 5. Map and Chart Projection (*i.e.*, the principles of the projection of Mercator's chart; and the mode of computing the scale for a Mercator's chart of certain limits of latitude and longitude; and laying off these in degrees, &c.). 6. Topographical Plan-drawing (*i.e.*, the principles of topographical plan-drawing by scale and compass bearing; copying such plans by squares on the same, or reduced or enlarged scales; adapting them to altered relative positions of points. Also fair practical proficiency in topographical and perspective drawing with pencil, pen, and brush). 7. Translation from French, Spanish, or some other modern language. Candidates must pass to the satisfaction of the Civil Service Commissioners in all the first six subjects. They will also be required to show what preliminary training or technical education they have undergone to qualify them for a situation of this nature, and they must satisfy the Commissioners that they possess the special qualifications necessary for the office. These include particularly aptness in hydrographical chart drawing, and on this point the Commissioners will ask for a report from the Hydrographer of the Admiralty.	17 and 25. *See* Note * on p. 37.	1*l.*
VI. [SCH. A.] ACCOUNTANT CLERKS IN THE DEPARTMENT OF THE DIRECTOR OF ENGINEERING AND ARCHITECTURAL WORKS.	20 and 24. *See* Note * on p. 37.	
Part I.—Preliminary.		5*s.*
1. Handwriting. 2. Orthography. 3. Arithmetic (including Vulgar and Decimal Fractions).		
Part II.—Competitive.		1*l.*
1. English Composition. 2. Squaring Dimensions. 3. Knowledge of Materials. 4. Theory and Principles of Construction. 5. Architectural and Engineering Drawing (so far as necessary for reading plans and understanding their details, taking out quantities or measuring work and preparing specifications). 6. Estimating and Valuing.		

Department, and Qualifications required.	Limits of Age.	Fee for Examination.
ADMIRALTY—*continued.*		
ACCOUNTANT CLERKS—*cont.*		
7. Preparation of Builders' Accounts (including abstracting and getting into bill, pricing and examination). 8. Book-keeping by Double Entry. Candidates must show a satisfactory acquaintance with the first seven subjects.		
VII. [M.] MESSENGERS IN THE ADMIRALTY - -	21 and 40. In the case of seamen and marines, or persons who have been in the service of the Admiralty from the age of 40, the age of admission to be 45.	
1. Reading. 2. Writing from Dictation. 3. Arithmetic (elementary).		
VIII. [SCH. A.] JUNIOR ASSISTANTS IN THE ROYAL OBSERVATORY, GREENWICH.	18 and 25. *See* Note * on p. 37.	
Part I.—Preliminary.		10*s.*
1. Handwriting. 2. Orthography. 3. Arithmetic (to Vulgar and Decimal Fractions and Extraction of Square Root); the Use of Logarithms; the Use of the Signs + and − as applied to numbers.		
Part II.—Competitive.		1*l.*
1. Latin (translation). 2. French (translation). 3. Mathematics, viz.:— *a.* Euclid, Books I. to IV. *b.* Trigonometry as applied to plane triangles. *c.* Algebra, including simple and quadratic equations, involution, evolution, and surds.		
4. Astronomy:— *a.* The use of the globes. *b.* The names and positions of the principal stars. *c.* The proportions and dimensions of the orbits of the planets and their periodic times. *d.* The appearance and phases of the moon and planets, and the causes of the phases: their real and apparent movements.		
5. Optics:— *a.* The laws of reflexion and refraction. *b.* The theory of the prism. *c.* Chromatic dispersion and the spectrum. *d.* The formation of images by plane mirrors and single lenses. *e.* The theory of the eye. Candidates will be required to show a competent knowledge of each of these subjects.		
6. German (translation). 7. Mathematics, viz.:— *a.* The binomial theorem; De Moivre's theorem. *b.* Cubic equations; numerical equations. *c.* Spherical trigonometry, and its applications to Astronomy.		

Department, and Qualifications required.	Limits of Age.	Fee for Examination.
ADMIRALTY—*continued.*		
JUNIOR ASSISTANTS IN THE ROYAL OBSERVATORY, GREENWICH—*cont.* *d.* The differential calculus; including Taylor's theorem—small variations of plane and spherical triangles—fundamental differentials—fundamental integrals. *e.* Mechanics; including the parallelogram of forces—the mechanical powers—the centre of gravity—falling bodies—the pendulum. Candidates are not required to pass in subjects 6 and 7, but great weight will be attached to a knowledge of them. The successful Candidate will not be finally appointed unless on probation he shall satisfy the head of the Department as to his fitness in respect of the following, among other qualifications, viz. :— Manual dexterity in the use and adjustment of instrumental mechanism. Accuracy of eye in observation. Distinctness of ear in time-reference. Promptitude in decision. Punctuality contingent on variable circumstances.		
IX. [SCH. A.] JUNIOR ASSISTANTS FOR PHOTOGRAPHIC AND SPECTROSCOPIC OBSERVATIONS IN THE ROYAL OBSERVATORY, GREENWICH. *Part I.—Preliminary.* 1. Handwriting. 2. Orthography. 3. Arithmetic (to Vulgar and Decimal Fractions and Extraction of Square Root); the Use of Logarithms; the Use of the Signs + and − as applied to numbers.	18 and 25. *See* Note * on p. 37.	10*s.*
Part II.—Competitive. 1. Latin (translation). 2. French (translation). 3. Mathematics, viz. :— *a.* Euclid, Books I. to IV. *b.* Trigonometry as applied to plane triangles. *c.* Algebra, including simple and quadratic equations, involution, evolution, and surds. 4. Astronomy :— *a.* The use of the globes. *b.* The names and positions of the principal stars. *c.* The proportions and dimensions of the orbits of the planets and their periodic times. *d.* The appearance and phases of the moon and planets, and the causes of the phases: their real and apparent movements. 5. Optics :— *a.* The laws of reflexion and refraction. *b.* The theory of the prism. *c.* Chromatic dispersion and the spectrum. *d.* The formation of images by plane mirrors and single lenses. *e.* The theory of the eye. 6. Chemistry, Photography, and Spectroscopy. Candidates will be required to show a competent knowledge of each of these subjects.		1*l.*

Department, and Qualifications required.	Limits of Age.	Fee for Examination.
ADMIRALTY—*continued.*		
JUNIOR ASSISTANTS FOR PHOTOGRAPHIC AND SPECTROSCOPIC OBSERVATIONS—*cont.*		
OPTIONAL.		
7. German (translation). 8. Mathematics, viz.:— *a.* The binomial theorem; De Moivre's theorem. *b.* Cubic equations; numerical equations. *c.* Spherical trigonometry, and its applications to Astronomy. *d.* The differential calculus; including Taylor's theorem—small variations of plane and spherical triangles — fundamental differentials — fundamental integrals. *e.* Mechanics; including the parallelogram of forces —the mechanical powers—the centre of gravity—falling bodies—the pendulum. Candidates are not required to pass in subjects 7 and 8, but great weight will be attached to a knowledge of them.		
The successful Candidate will not be finally appointed unless on probation he shall satisfy the head of the Department as to his fitness in respect of the following, among other qualifications, viz.:— Manual dexterity in the use and adjustment of instrumental mechanism. Accuracy of eye in observation. Distinctness of ear in time-reference. Promptitude in decision. Punctuality, contingent on variable circumstances.		
X. [SCH. A.] CHIEF ASSISTANTS IN THE OBSERVATORY, CAPE OF GOOD HOPE.	18 and 25. *See* Note * on p. 37.	10
Part I.—Preliminary. 1. Handwriting. 2. Orthography. 3. Arithmetic (to Vulgar and Decimal Fractions and Extraction of Square Root); the Use of Logarithms; the Use of the Signs + and — as applied to numbers.		
Part II.—Competitive. 1. Latin (translation). 2. French (translation). 3. Mathematics, viz.:— *a.* Euclid, Books I. to IV. *b.* Trigonometry as applied to plane triangles. *c.* Algebra, including simple and quadratic equations, involution, evolution, and surds. 4. Astronomy:— *a.* The use of the globes. *b.* The names and positions of the principal stars. *c.* The proportions and dimensions of the orbits of the planets and their periodic times. *d.* The appearance and phases of the moon and planets, and the causes of the phases: their real and apparent movements. Candidates will be required to show a competent knowledge of each of these subjects.		11.

Department, and Qualifications required.	Limits of Age.	Fee for Examination.
ADMIRALTY—*continued.*		
SISTANTS, CAPE OF GOOD HOPE—*cont.*		
rman (translation). athematics, viz.:—		
1. The binomial theorem; De Moivre's theorem.		
2. Cubic equations; numerical equations.		
3. Spherical trigonometry, and its applications to Astronomy.		
4. The differential calculus; including Taylor's theorem—small variations of plane and spherical triangles—fundamental differentials—fundamental integrals.		
5. Mechanics; including the parallelogram of forces—the mechanical powers—the centre of gravity—falling bodies—the pendulum.		
6. Optics; including the laws of reflexion and refraction—the formation of images by plane mirrors and single lenses—the theory of the eye.		
ites are not required to pass in subjects 5 and 6, weight will be attached to a knowledge of them.		
ccessful Candidate will not be finally appointed probation he shall satisfy the head of the Depart- o his fitness in respect of the following, among ifications, viz.:—		
al dexterity in the use and adjustment of instrumental mechanism.		
racy of eye in observation.		
ictness of ear in time-reference.		
ptitude in decision.		
uality contingent on variable circumstances.		
E. A.] THIRD ASSISTANTS IN THE OBSERVATORY, PE OF GOOD HOPE.	17 and 20. *See* Note * on p. 37.	
lidate will be eligible who shall not have produced l Service Commissioners a week before the day mination a certificate from the Astronomer Royal, e head of a recognised Observatory, that he has reliminary training and possesses the technical necessary to qualify him for making obser-		
mination will be in the following subjects, viz.:— ndwriting and Orthography.		15*s.*
ithmetic (including Vulgar and Decimal Fractions).		
lculations of instrumental corrections, and umerical reductions of observations.		
tes failing in any of the above-named subjects eligible.		
E. A.] ASSISTANTS OR COMPUTERS IN THE NAUAL ALMANAC OFFICE.	18 and 25. *See* Note * on p. 37.	1*l.*
1. Handwriting and Orthography. 2. Arithmetic (including Vulgar and Decimal Fractions). 3. Algebra (including Quadratic Equations).		

Department, and Qualifications required.	Limits of Age.	Fee for Examination.
ADMIRALTY—*continued.*		
ASSISTANTS OR COMPUTERS IN THE NAUTICAL ALMANAC OFFICE—*cont.* 4. Logarithmic solution of plane and spherical triangles. 5. *Astronomical computations. * Candidates will be required to convert geocentric longitude and latitude into right ascension and declination, to find by the tables the hourly right ascension and declination of the Moon from her right ascension and declination at noon and midnight, and to compute, according to the method in the Appendix to the Nautical Almanac for 1836, the circumstances of an occultation of a star by the Moon.		
NAVAL HOSPITALS.		
XIII. [M. Cl. vii.] DISPENSERS IN H.M. NAVAL ESTABLISHMENTS. Candidates will be required to show that they possess at least the minor qualification of the Pharmaceutical Society, and for appointments in charge of stores, the major qualification.	20 and 25.	
XIV. [M.] MATRONS, STEWARDS OR BUTLERS, ASSISTANT OR UNDER STEWARDS, PORTERS, OR MESSENGERS, AND GARDENERS.† 1. Reading. 2. Handwriting and Spelling. 3. Arithmetic (Simple Addition and Subtraction).	23 and 45.‡	
XV. [M.] COOKS, ASSISTANT-COOKS, MALE ATTENDANTS ON LUNATICS, MALE NURSES OR ATTENDANTS ON THE SICK.† 1. Reading. 2. Handwriting. 3. Arithmetic (Simple Addition and Subtraction).	23 and 45.‡	
XVI. [M.] FEMALE ATTENDANTS ON LUNATICS, FEMALE NURSES OR ATTENDANTS ON THE SICK.† 1. Reading. 2. Handwriting. 3. Arithmetic (Simple Addition and Subtraction).	36 and 45.‡	
XVII. [M.] WARDMASTERS, DISPENSARY MEN, HOSPITAL PEONS (NATIVES), BARBERS, PLUMBERS AND OVERSEERS OF GAS, FOREMEN OF WASHING MACHINERY, ENGINE-DRIVERS, ASSISTANT ENGINE-DRIVERS, CARPENTERS, BOATMEN, PRINCIPAL OR ORDINARY LABOURERS EMPLOYED IN ANY CAPACITY, AND WATCHMEN. No Literary Examination.	21 and 45.‡	
Note.—The above regulations (XIV. to XVII.) as to limits of age and qualifications do not apply to situations filled in the ordinary course of promotion from among the members of the *Established* Wages Staff already certificated, nor to men borne on ships' books, or on the strength of Marine Divisions, who are detached for Hospital duties; but only to candidates for Civil Appointment and Pension.		

† Except in the case of Natives of Foreign Countries, who are specially exempted from literary examination.

‡ In reckoning their age, Pensioners from the Navy, Army, and Royal Marines, and persons who have served continuously for a period of not less than two years in hired capacities in Naval Hospitals and Marine Infirmaries, may deduct from their actual age any time not exceeding five years spent in those Services.

Department, and Qualifications required.	Limits of Age.	Fee for Examination.
ADMIRALTY—*continued.*		
R NAVAL ESTABLISHMENTS INCLUDING DOCKYARDS.		
CH. A.] CLERKS.—(Scheme not yet arranged.)		
H. A.] CLERKS IN MALTA DOCK AND VICTUALLING YARD.	16 and 20. "In reckoning their age members of the Royal Malta Fencible Artillery (whether commissioned or non-commissioned) will for the purpose of competition for this appointment, be considered to have on leaving their former service the same age as when they entered it, and for the same purpose, persons who have been employed for two full consecutive years in Malta Dock and Victualling Yard, may deduct from their actual age any time not exceeding five years which they may have spent in such employment."	
competition, *limited to natives of Malta, was held* '2 *under the following rules :—*		
Preliminary Examination.		
ndwriting. thography. ithmetic (to Vulgar and Decimal Fractions).		
Competitive Examination.		
	Marks.	
writing - - - -	400	
graphy - - - -	400	
netic - - - -	400	
ng MS. (to test accuracy) -	200	
ing or Docketing - -	200	
ding Returns into Summaries -	200	
sh Composition - -	200	
aphy - - - -	200	
sh History - - -	200	
keeping - - - -	200	
E. A.] ASSISTANT SCHOOLMASTERS IN DOCKIDS.	20 and 35. *See* Note * on p. 87.	1*l.*
ndwriting and Orthography. ithmetic and Mensuration. ummar and Analysis of Sentences. glish Composition. ysical and Political Geography of the World, pecially of England and Europe. glish History. clid (first four books), Book VI., and the first 21 ropositions of Book XI. gebra. ne Trigonometry. ferential and Integral Calculus (elementary), and lane Co-ordinate Geometry (elementary). e elementary principles of Mechanics and Hydroatics, not requiring the Differential Calculus.		
dates will also be competitively examined in the r subjects; and although it will not be necessary Candidate to have a knowledge of these latter a high value will be set on them :—		
ne Trigonometry (analytical), and Spherical rigonometry. ne Co-ordinate Geometry (more advanced), and nalytical Geometry of three dimensions. ferential and Integral Calculus (more advanced), nd the easier Differential Equations.		

Department, and Qualifications required.	Limits of Age.	Fee for Examination.
ADMIRALTY—*continued.*		
ASSISTANT SCHOOLMASTERS IN DOCKYARDS—*cont.* 15. Higher Mechanics and Hydrostatics. 16. Elementary Chemistry and Physics. No Candidate will be eligible who does not produce satisfactory proof of his ability and experience in teaching. Evidence on this point must be sent in at least a week before the date of the competition. If it prove primâ facie satisfactory, the Candidate will be admitted to compete, subject to such further inquiry as may be necessary. "In the case of a person who has been trained in one of H. M. Dockyard Schools, a certificate from the President of the Royal Naval College that the candidate possesses the requisite practical qualifications will be regarded by the Commissioners as satisfactory evidence." Engineer students and engineer officers of the R.N. are not eligible.		
XXI. [SCH. A.] SCHOOLMASTERS IN LEWES NAVAL PRISON.—(Scheme not yet arranged.)		
XXII. [SCH. A.] CLERKS OF THE WORKS.—(Scheme not yet arranged.)		
XXIII. [SCH. A.] FOREMEN OF WORKS IN A DOCKYARD. —(Scheme not yet arranged.)		
XXIV. [N. Cl. vii.] DISPENSERS IN H.M. NAVAL ESTABLISHMENTS. See *Naval Hospitals.*	20 and 25.	
XXV. [N. Cl. vii.] CURATOR OF NAVAL MUSEUM IN THE ROYAL NAVAL COLLEGE, GREENWICH. (No literary examination.)		
XXVI. [N.] STORE ISSUERS.—(Scheme not yet arranged.)		
XXVII. [N.] HIRED STORE ISSUERS OR STOREHOUSEMEN, ESQUIMALT NAVAL YARD. 1. Handwriting. 2. Arithmetic (elementary).	30 and 50.	
XXVIII. [N.] CHIEF WARDERS, PRINCIPAL WARDERS, WARDERS, ASSISTANT WARDERS, AND MESSENGERS AT LEWES NAVAL PRISON. 1. Reading. 2. Writing and Spelling. 3. Addition and Subtraction (Simple and of Money).	25 and 45.	
XXIX. [N.] MOUNTED COASTGUARD MEN - - 1. Reading. 2. Writing.	20 and 40	
XXX. [N.] FOREMEN OF FACTORIES, FOREMEN OF BOILERMAKERS. 1. Arithmetic (elementary). 2. The technical knowledge necessary for the particular situation vacant.	25 and 45.	
XXXI. [N.] TIMEKEEPERS AND ASSISTANT TIMEKEEPERS IN DOCKYARDS, AND SERGEANTS OF POLICE IN H.M. NAVAL ESTABLISHMENTS ABROAD. 1. Handwriting. 2. Arithmetic (first four rules).	21 and 35. Pensioned non-commissioned officers of marines are eligible up to any age.	
XXXII. [N.] LEADING MEN OF LABOURERS - - The first four rules of arithmetic, simple and compound.	21 and 45.	
XXXIII. [N.] ARTIFICERS AND WORKMEN - - (No Literary Examination.)	21 and 35. Excepting hired men, who are to be considered eligible until the age of 45, provided that when placed on the hired list their age did not exceed 35 years and that their employment has been continuous from that date.	

Department, and Qualifications required.			Limits of Age.	Fee for Examination
ADMIRALTY—*continued.*				
XXXIV. [M.] BUTCHERS IN VICTUALLING YARDS - No literary examination.			21 and 40. With extension to 45 in case of men borne on the Hired List from a time at which they were under 40.	
XXXV. [O. C.] ENGINEER STUDENTS† - -			14 and 16.	
		No. of Marks.		
*Arithmetic - - -		300		
English—				
*Handwriting - - - -	40			
*Accuracy and Intelligence in Writing from Dictation - - -	60			
*Composition - - - -	100			
Grammar - - - -	150			
		350		
French—				
Translation into English - -	100			
Grammar - - - -	50			
		150		
Geography - - - - -		100		
Algebra (up to and including Quadratic Equations) - - - -		300		
Geometry (the subjects of Books I. to IV. and Book VI. of Euclid's Elements, and the definitions of Book V.) - -		300		
Total - -		1,500		
XXXVI. [O. C.] DOCKYARD APPRENTICES.‡			14 and 15.	
		No. of Marks.		
1. Arithmetic - - - -		350		
2. Orthography - - -		100		
3. Handwriting - - -		100		
4. Grammar - - - -		100		
5. English Composition - -		100		
6. Geography - - -		100		
7. Euclid, first three books -		150		
8. Algebra, up to and inclusive of Quadratic Equations - - - -		150		

Candidates will also be tested as to their ability to read aloud with clearness, distinctness, and accuracy, and without hesitation. Stammering, or any imperfection of utterance, will be regarded as a disqualification.

Candidates who fail to pass in the first four subjects (those marked with an asterisk), or in reading aloud, will be disqualified, and their other papers will not be examined. The candidates who obtain not less than 750 marks in the aggregate, will be classed in one general list in order of merit, according to the number of marks gained, and will be eligible for appointment as engineer students in one of the dockyards, according to the number of appointments which it may be decided to make that year.

† The list of candidates for these appointments is kept at the Admiralty in London. All applications for the forms to be filled up by persons wishing to compete must be sent to the Secretary of the Admiralty before the 1st of March in each year.

‡ Lists of candidates desiring to be examined at the different dockyards are kept by the superintendents. Those candidates who desire to be examined in London should address their applications to the Secretary, Admiralty, London, S.W. All applications should be sent in before the 1st of March in each year.

Department, and Qualifications required.	Limits of Age.	Fee for Examination.
ADMIRALTY—*continued.*		
DOCKYARD APPRENTICES—*cont.*		
Candidates who fail to pass in the first three subjects will be disqualified, and their other papers will not be examined.		
XXXVII. [O. C.] VICTUALLING YARD APPRENTICES* -	13¾ and 15.	
	No. of Marks.	
1. Arithmetic - - - -	350	
2. Spelling - - - - -	100	
3. Handwriting - - - -	100	
Physical qualifications:—		
Height, weight, girth of chest, and strength -	200	
	750	
XXXVIII. SITUATIONS FILLED BY PROMOTION IN DOCKYARDS.†		
[M.] *Assistant to Admiralty Chemist.*	Under 45.	
1. Chemistry.		
2. Testing Government stores chemically.		
3. Electricity and Galvanism.		
OTHER SITUATIONS FILLED BY PROMOTION IN DOCKYARDS.†		
(1.) [L. C.] *Storehousemen (from Labourers and others of one Yard, and any other Persons that may be nominated).*		
	Marks.	
First four rules of Arithmetic, simple and compound, and a knowledge of weights and measures in common use - - - -	200	
(2.) [L. C.] *Timber Reducers, Timber Issuers (from Shipwrights of one Yard).*	Under 45.	
1. First four rules of Arithmetic, simple and compound, Rule of Three, Practice, Vulgar Fractions, Decimal Fractions, Duodecimals, and Mensuration of plane surfaces and solids -	200	
2. Practical shipbuilding - - - -	600	
(3.) [L. C.] *Leading Men of Labourers (when exclusively from established Labourers of one Yard).*	Under 45.	
First four rules of Arithmetic, simple and compound - - - - - -	200	
(4.) [L. C.] *Leading Men of Riggers (from Riggers of one Yard).*	Under 45.	
1. First four rules of Arithmetic, simple and compound - - - - -	200	
2. Questions relating to the various works performed by their department - - -	400	
(5.) [L. C.] *Leading Men of Spinners or Ropemakers (from Spinners or Ropemakers of one Yard).*	Under 45	
1. First four rules of Arithmetic, simple and compound - - - - -	200	
2. Questions relating to the various works performed by their department - - -	400	

* The list of candidates is kept by the Superintending Storekeepers of the Victualling Yards. All applications must be sent in before 1st May or 1st November.

† These examinations are held at the various dockyards, &c., under the superintendence of the Civil Service Commissioners. The papers in professional subjects are, however, prepared and valued at the Admiralty.

Department, and Qualifications required.	Limits of Age.	Fee for Examination.
ADMIRALTY—*continued.*		
SITUATIONS FILLED BY PROMOTION IN DOCKYARDS*—*cont.*		
Marks.		
(6.) [L. C.] *Leading Men of Block Mills or Metal Mills (from Workmen at the respective Mills of one Yard).*	Under 45.	
1. First four rules of Arithmetic, simple and compound, and Rule of Three - - - 200		
2. Questions relating to the various works performed by their respective departments - 400		
(7.) [L. C.] *Leading Men of Storehouses (from Storehousemen and others of one Yard, and any other Persons who may be nominated according to existing Rules).*	Under 45.	
First four rules of Arithmetic, simple and compound, a knowledge of weights and measures in common use, Rule of Three, and Practice - 200		
(8.) [L. C.] *Leading Men of Painters (from Painters of one Yard).*	Under 45.	
1. First four rules of Arithmetic, simple and compound, Rule of Three, and Practice - - 200		
2. Questions relating to the various works performed by their department - - - 400		
(9.) [L. C.] *Leading Men of Plumbers (from Plumbers of one Yard).*	Under 45.	
1. First four rules of Arithmetic, simple and compound, Rule of Three, and Duodecimals - 200		
2. Questions relating to the various works performed by their department - - - 400		
(10.) [L. C.] *Leading Men of Sailmakers (from Sailmakers of one Yard).*	Under 45.	
1. First four rules of Arithmetic, simple and compound, Rule of Three, Practice, and Mensuration of Surfaces - - - - 200		
2. Questions relating to the various works performed by their department - - - 400		
(11.) [L. C.] *Leading Men of Joiners (from Joiners of one Yard).*	Under 45.	
1. First four rules of Arithmetic, simple and compound, Rule of Three, Practice, and Duodecimals - - - - - 200		
2. Questions relating to the various works performed by their department - - - 400		
(12.) [L.C.] *Leading Men of Caulkers (from Caulkers of one Yard).*	Under 45.	
1. First four rules of Arithmetic, simple and compound, Rule of Three - - - 200		
2. Questions relating to the various works performed by their department - - - 400		
(13.) [L. C.] *Leading Men of Millwrights (from Millwrights of one Yard).*	Under 45.	
1. First four rules of Arithmetic, simple and compound, Rule of Three, Practice, Vulgar Fractions, Decimal Fractions, and Duodecimals - 200		
2. Questions relating to the various works performed by their department - - - 400		

* These examinations are held at the various dockyards, &c. under the superintendence of the Civil Service Commissioners. The papers in professional subjects are, however, prepared and valued at the Admiralty.

Department, and Qualifications required.	Marks.	Limits of Age.	Fee for Examination.
ADMIRALTY—*continued.*			
SITUATIONS FILLED BY PROMOTION IN DOCKYARDS*—*cont.*			
(14.) [L. C.] *Leading Men of Shipwrights (from Shipwrights, Timber Issuers, Timber Reducers of one Yard).*		Under 45.	
1. First four rules of Arithmetic, simple and compound, Rule of Three, Practice, Vulgar Fractions, Decimal Fractions, and Duodecimals -	200		
2. Questions in practical shipbuilding - -	600		
(15.) [L. C.] *Leading Men of Trades in the Steam Branch, viz., Boilermakers, Copper-smiths, Fitters, Founders, and Pattern Makers (from Workmen, hired or established, of the particular Trade of one Yard).*		Under 45.	
1. First four rules of Arithmetic, simple and compound, Rule of Three, Practice, Vulgar Fractions, Decimal Fractions, and Duodecimals -	200		
2. Questions relating to the various works performed by their respective departments -	600		
(16.) [L. C.] *Liners (from Shipwrights and Leading Men of ditto of one Yard).*		Under 45.	
1. First four rules of Arithmetic, simple and compound, Rule of Three, Practice, Vulgar Fractions, Decimal Fractions, and Duodecimals -	200		
2. Questions in practical shipbuilding. Also the lining of masts and spars - - -	600		
(17.) [L. C.] *Modellers (from Shipwrights of one Yard).*		Under 45.	
1. First four rules of Arithmetic, simple and compound, Rule of Three, Practice, Vulgar Fractions, Decimal Fractions, and Duodecimals -	200		
2. Questions in practical shipbuilding; shipdrawing, laying off, and calculation of displacement	400		
(18.) [L. C.] *Draughtsmen (from Shipwrights of one Yard).*		Under 45.	
1. First four rules of Arithmetic, simple and compound, Rule of Three, Practice, Vulgar Fractions, Decimal Fractions, and Duodecimals, with Mensuration of plane surfaces and solids	200		
2. Questions in practical shipbuilding, shipdrawing, laying off, and calculation of displacement	600		
(19.) [L. C.] *Mechanic Writers, including those of the Steam Branch Trades (from Workmen of various Trades of one Yard).*		Under 45.	
1. First four rules of Arithmetic, simple and compound, Rule of Three, Practice, Vulgar Fractions, Decimal Fractions, and Duodecimals, with Mensuration of plane surfaces and solids	300		
2. Same as for Leading Men of the various trades	300		
(20.) [L. C.] *Layers (from Leading Men of Ropemakers of all Yards).*		Under 50.	
1. First four rules of Arithmetic, simple and compound - - - - -	200		
2. Questions relating to ropemaking - -	400		
(21.) [L. C.] *Foremen of Storehouses (from Leading Men of Storehouses of one Yard, and Leading Men of Shipwrights of one Yard, if nominated by Storekeeping Officer).*		Under 50.	
First four rules of Arithmetic, simple and compound, a knowledge of weights and measures in common use, Rule of Three, Practice, and Vulgar and Decimal Fractions - -	300		

* These examinations are held at the various dockyards, &c., under the superintendence of the Civil Service Commissioners. The papers in professional subjects are, however, prepared and valued at the Admiralty.

Department, and Qualifications required.		Limits of Age.	Fee for Examination.
ADMIRALTY—*continued.*			
Situations filled by Promotion in Dockyards*—*cont.*			
	Marks.		
(22.) [L. C.] *Foremen of Riggers (from Leading Men of Riggers of all Yards).*		Under 50.	
1. First four rules of Arithmetic, simple and compound, Rule of Three, and Practice - -	240		
2. Questions relating to the various works performed by their department - -	420		
(23.) [L. C.] *Foremen of Sailmakers (from Leading Men of Sailmakers of all Yards).*		Under 50.	
1. First four rules of Arithmetic, simple and compound, Rule of Three, Practice, Vulgar Fractions, and Mensuration of surfaces -	240		
2. Questions relating to the various works performed by their department - - -	420		
(24.) [L. C.] *Foremen of Smiths (from 1st, 2nd, and 3rd Class Smiths of all Yards).*		Under 50.	
1. First four rules of Arithmetic, simple and compound, Rule of Three, Practice, Vulgar and Decimal Fractions - - - -	240		
2. Questions relating to the various works performed by their department - - -	600		
(25.) [L. C.] *Foremen of Millwrights, Fitters, also Engineers and Millwrights at Devonport (from Leading Men of Factory, Boiler-makers, &c., of all Yards, and such other Persons as may be nominated).*		Under 45 years if hired, provided the candidate was under 35 years of age when first entered on the hired list, and that his service has been continuous. (Under 50 if already on the establishment.)	
1. First four rules of Arithmetic, simple and compound, Rule of Three, Practice, Vulgar and Decimal Fractions - - - -	240		
2. Questions relating to the various works performed by their respective departments -	600		
(26.) [L. C.] *Foremen of Joiners (from Leading Men of Joiners of all Yards).*		Under 50.	
1. First four rules of Arithmetic, simple and compound, Rule of Three, Practice, Vulgar and Decimal Fractions, Duodecimals, and Mensuration of plane surfaces and of solids -	240		
2. Questions relating to the various works performed by their departments - -	420		
(27.) [L. C.] *Foremen of Caulkers (from Leading Men of Caulkers of all Yards).*		Under 50.	
1. First four rules of Arithmetic, simple and compound, Rule of Three, Practice, Vulgar and Decimal Fractions, Duodecimals, and Mensuration of plane surfaces and of solids -	240		
2. Questions relating to the various works performed by their departments - -	420		
(28.) [L. C.] *Foremen of the Yard (from Leading Men, Liners, Draughtsmen, Modellers of all Yards).*		Under 50.	
1. First four rules of Arithmetic, simple and compound, Rule of Three, Practice, Vulgar and Decimal Fractions, Duodecimals, and Men-			

* These examinations are held at the various dockyards, &c., under the superintendence of the Civil Service Commissioners. The papers in professional subjects are, however, prepared and valued at the Admiralty.

Department, and Qualifications required.	Limits of Age.	Fee for Examination.
ADMIRALTY—*continued.*		
SITUATIONS FILLED BY PROMOTION IN DOCKYARDS*—*cont.*		
Marks.		
suration of plane surfaces and of solids, together with Algebra to Simple Equations, and the first three books of Euclid, with deductions therefrom - - - 300		
2. Practical Shipbuilding, Laying off, and Calculation of Displacements - - - 600		
(29.) [L. C.] *Foremen of Ropemakers or Spinning Machines (from Layers of all Yards).*	Under 50.	
1. First four rules of Arithmetic, simple and compound, Rule of Three, and Practice - - 240		
2. Questions relating to the various works performed by their department - - - 420		
(30.) [L. C.] *Master Ropemakers (from Layers and Foremen of Ropemakers).*	Under 50.	
1. Rule of Three, Practice, Vulgar and Decimal Fractions, and Duodecimals - - - 300		
2. Questions relating to the trade - - 450		
(31.) [L. C.] *Master Smiths (from Foremen of Smiths of all Yards).*	Under 50.	
1. First four rules of Arithmetic, simple and compound, Rule of Three, Practice, Vulgar and Decimal Fractions, Duodecimals, and Mensuration of surfaces and solids - - 300		
2. Questions relating to the trade, including the quality and manufacture of iron, and the building, survey, and repair of iron ships - 600		
(32.) [L. C.] *Assistant Master Shipwrights (from Foremen of the Yard of all Yards).*	Under 50.	
1. First four rules of Arithmetic, simple and compound, Rule of Three, Practice, Vulgar and Decimal Fractions, Duodecimals, Mensuration of surfaces and solids, Algebra to Quadratic Equations, first six books of Euclid and deductions therefrom, Elementary Mechanics, and Hydrostatics - - - - 1,000		
2. Practical Shipbuilding, Laying off, and Calculation of Displacement, and the Elements of Ship-Design - - - - 1,500		
(33.) [L. C.] VICTUALLING YARD—*Masters, Foremen, and Leading Men of Coopers (from Coopers).*	Under 50.	
1. Writing, first four rules of Arithmetic, simple and compound, Rule of Three, Practice, Vulgar and Decimal Fractions.		
2. Conversion of timber and gauging of casks.		
(34.) [L. C.] VICTUALLING YARD.—*Masters and Leading Men of Millers (from Millers).*	Under 50.	
1. Writing, first four rules of Arithmetic, simple and compound, and Rule of Three.		
2. A knowledge of the various grains used in the service; miscellaneous questions relating to the trade.		
(35.) [L. C.] VICTUALLING YARD.—*Masters and Leading Men of Bakers (from Bakers).*	Under 50.	
1. Writing, first four rules of Arithmetic, simple and compound, and Rule of Three.		
2. A knowledge of the quality of flour; miscellaneous questions relating to the trade.		

* These examinations are held at the various dockyards, &c., under the superintendence of the Civil Service Commissioners. The papers in professional subjects are, however, prepared and valued at the Admiralty.

partment, and Qualifications required.	Limits of Age.	Fee for Exami-nation.
ADMIRALTY—*continued.*		
FILLED BY PROMOTION IN DOCKYARDS*—		
] VICTUALLING YARD.—*Foremen of Stores and ng Men of Stores (from Leading Men of Stores orehousemen).* first four rules of Arithmetic, simple and und, Rule of Three, Practice, Vulgar and al Fractions.	Under 50.	
] VICTUALLING YARD.— *Storehousemen and ng Men of Labourers (from Mechanics or rers).* first four rules of Arithmetic, simple and und.	Under 50.	
PPOINTMENTS TO THE ROYAL MARINES.		
ry Lieutenants in the Royal Marine Artillery. n will be offered to the Successful Candidates r of merit at the Open Competitive Examina-or admission to the Royal Military Academy, ich, taking place in July of each year.		
ts in the Royal Marine Light Infantry. n will be offered to the Successful Candidates r of merit at the Open Competitive Examina-or admission to the Royal Military College, irst. The examinations will take place twice in the months of July and December.		
IRALTY COURT (IRELAND).		
IN REGISTRY, CLERKS IN MARSHAL'S OFFICE, ERKS IN COURT.† ses in Handwriting and Orthography. netic (elementary). ng. rison of copies with originals. h Composition. lerks in Court) Shorthand.	17 and 35. With an extension of five years in favour of persons who have been in the Public Service continuously from a time at which they were under 35.	
Y PURCHASE COMMISSION.		
ER DIVISION CLERKS.		
RUPTCY COURT (ENGLAND).		
LERKS IN THE OFFICE OF THE COMPTROLLER RUPTCY.—(Appointments before the Order ncil of 12 Feb. 1876 were made under Scheme s II.)		

inations are held at the various dockyards, &c., under the superintendence of the mmissioners. The papers in professional subjects are, however, prepared and valued r.

Department, and Qualifications required.	Limits of Age.	Fee for Examination.
BANKRUPTCY COURT (IRELAND).		
[M.] Clerks or Assistants (*a*) - - - - 1. Handwriting and Orthography. 2. Arithmetic (including Vulgar and Decimal Fractions). 3. English Composition. 4. Book-keeping and Accounts. 5. Geography of the United Kingdom.	18 and 30	
BANKRUPTCY (SCOTLAND).		
I. [M.] Clerks in Office of Accountant - - 1. Handwriting. 2. Orthography. 3. Arithmetic (including Vulgar and Decimal Fractions). 4. English Composition.	17 and 26. With an extension of five years in favour of persons who have served in the Department from a time when they were within the ordinary limits.	
BRITISH MUSEUM.		
I. [L. C.] Assistants - - - - - 1. Writing from Dictation. 2. Orthography. 3. Arithmetic (including Vulgar and Decimal Fractions). 4. English Composition. 5. Précis. 6. Geography. 7. English History, from the Conquest to the end of the eighteenth century (or, as alternative papers, Euclid, Algebra). 8. Translation from one Ancient and one Modern Language. 9. Any other subject or subjects which the Principal Trustees may in any case prescribe.	18 and 30.	
II. [M.] Messengers - - - - -	18 and 40.	
[M.] Attendants - - - - - 1. Writing from Dictation. 2. Arithmetic (first two rules, simple and compound).	18 and 30.	
BROADMOOR CRIMINAL LUNATIC ASYLUM.		
I. [M.] Clerks, Clerks of the Works -	18 and 40.*	
[M.] Bailiffs and Gardeners - - - 1. Writing from Dictation. 2. Arithmetic (including the Rule of Three and Practice, and the Arithmetical Tables).	24 and 40.*†	
II. [M.] Schoolmasters - - - - - 1. Handwriting and Orthography. 2. Reading. 3. Arithmetic (including Vulgar and Decimal Fractions). 4. Grammar and English Language. 5. Religious Knowledge (the Bible). 6. School Management.	21 and 40.*	

(*a*) *See* note on p. 36.

* Any candidate presenting himself within one month after attaining the prescribed age will be eligible for examination.

† Candidates who have been discharged from the army to be eligible while under 45, provided their service commenced while they were under 40, and has been continuous.

Department, and Qualifications required.	Limits of Age.	Fee for Examination.
MOOR CRIMINAL LUNATIC ASYLUM—*cont.*		
SCHOOLMASTERS—*cont.*		
Two at least of the following, at the option of the Candidate:—		
a.) English History;		
b.) Geography;		
c.) Elements of Geometry, or of some branch of Mathematics;		
d.) Latin.*		
] STEWARDS, AND ASSISTANT STOREKEEPERS -	25 and 42.†	
Handwriting and Orthography.		
Arithmetic (including Vulgar Fractions).		
Book-keeping (elementary).		
] MATRONS - - - - - -	25 and 40.†	
Writing and Orthography.		
Reading.		
Arithmetic (first four rules, simple and compound, and the Arithmetical Tables).		
Elementary Grammar.		
CHIEF ATTENDANTS, PRINCIPAL ATTENDANTS -	20 and 40.† With same exception as for subordinate officers (male). *See note* ‡ below.	
Reading.		
Writing.		
Arithmetic (simple Addition and Subtraction).		
] ENGINEERS - - - - - -	24 and 40.† Candidates who have been discharged from the Army to be eligible while under 45, provided their service commenced while they were under 40, and has been continuous. Persons who have been continuously employed as carpenters, &c. from a period at which they were under 40 years, may be eligible up to 50.	
Handwriting and Orthography.		
Arithmetic (elementary).		
.] SUBORDINATE OFFICERS AND ATTENDANTS (MALE).	20 and 40.†‡ ‡ An exception to be made in favour of those who have served in the Army, or as attendants in hospitals, or as clerks of the works, or foremen of the works, or storekeeper in the Convict Service. Such candidates to be eligible while under 45, provided their service commenced while they were under 40, and has been continuous.	
Reading.		
Writing.		
M.] SUBORDINATE SERVANTS AND ATTENDANTS (FEMALE).	20 and 36.†	
Reading.		
Writing.		
L GROUNDS, OFFICE OF INSPECTOR OF.		
L.] CLERKS. (Appointments before the Order in Council of 12 Feb. 1875 were made under the Scheme for Class II.)		
ANCERY, SCOTLAND (OFFICE OF DIRECTOR OF).		
FIRST AND SECOND CLERKS (*a*) - - -	21 and 25. Assistant Clerks (permanent or temporary) are to be considered eligible whatever may be their ages, provided they were under 25 when first employed and have served continuously.	
Writing from Dictation.		
Arithmetic (elementary).		
Book-keeping by Single Entry.		
English Composition.		
Latin Translation.		
Scotch Law and Conveyancing.		

ualifying test is translation into English.
andidate presenting himself within one month after attaining the prescribed age will be r examination.
ote on p. 36.

Department, and Qualifications required.	Limits of Age.	Fee for Examination.
CHANCERY, SCOTLAND (OFFICE OF DIRECTOR OF)—*cont.*		
FIRST AND SECOND CLERKS—*cont.*		
7. The power of reading and writing the Engrossing Hand used in Chancery; the power of reading the older volumes of the records; and a general knowledge of the Writs and Extracts issued from Chancery.		
II. [M.] PERMANENT ASSISTANT CLERKS (*a*) - -	18 and 30. Except in the case of those who have previously served as Temporary Clerks.	
1. Handwriting and Orthography.		
2. Arithmetic.		
3. English Composition.		
4. Latin (slight elementary knowledge).		
5. The power of reading and writing the Engrossing Hand used in Chancery, and the power of reading the older volumes of the Records.		
CHARITABLE BEQUESTS COMMISSION (IRELAND).		
I. [O. C.] LOWER DIVISION CLERKS.		
II. [M.] MESSENGER AND OFFICE KEEPER - -	20 and 40. An extension to 45 will be allowed in favour of all persons who may have been discharged from the Army, provided their service commenced when they were under 40 and has been continuous.	
1. Writing from Dictation.		
2. Arithmetic (elementary).		
CHARITY COMMISSION.		
I. [SCH. A.] CLERKS* - - - -	19 and 30. *See* note * on p. 37.	1*l.*
Obligatory Subjects.		
1. Handwriting.		
2. Orthography.		
3. Arithmetic (including Vulgar and Decimal Fractions).		
4. English Composition.		
5. Précis Writing.		
6. The principles of Law and Equity having relation especially to Charitable and Public Trusts.		
7. Procedure and Practice in Courts of Law and Equity.		
8. Elements of Conveyancing.		
Optional Subjects.		
9. Geography.		
10. English History.		
11. Latin.		
II. [O. C.] LOWER DIVISION CLERKS.		
III. [M.] MESSENGERS - - - - -	21 and 35.	
1. Handwriting and spelling.		
2. Arithmetic (elementary).		
CHELSEA HOSPITAL.		
I. [L. C.] CLERKS AND TEMPORARY CLERKS (*a*) -	17 and 25. An extension to 30 will be allowed in favour of those who having been employed as Temporary Clerks while under the age of 25 have served continuously.	
1. Writing from Dictation.		
2. Arithmetic (including Vulgar and Decimal Fractions).		
3. Book-keeping by Single Entry.		
4. English Composition.		
5. Précis.		
6. One Dead or Modern Foreign Language.†		
II. [M. Cl. vii.] DISPENSERS.‡ To be appointed under Clause VII. of the Order in Council of 4 June 1870.		

(*a*) *See* note on p. 36.
* These rules are under revision.
† The qualifying test is translation into English.
‡ Must be borne on the "Medical Register."

artment, and Qualifications required.	Limits of Age.	Fee for Examination.
CHELSEA HOSPITAL—*cont.*		
OMEN (NURSES, &c.) - - - -	23 and 40	
g.		
g.		
ietic (simple Addition and Subtraction).		
GANISTS - - - - -	25 and 40.	
g.		
riting (including moderate proficiency in ing).		
ietic (first four rules, simple, and compound).		
and Singing (sufficient for the purpose of ng the Organ at Church Service, and of teach- nd conducting a choir in simple Psalmody).		
CRETARY'S OFFICE (IRELAND).		
Clerks. (Scheme not yet arranged.)		
OWER DIVISION CLERKS.		
PERINTENDENTS OF MESSENGERS - -	20 and 35.*	
SSENGERS AND EXTRA MESSENGERS -	19 and 35.*	
g from Dictation.		
ietic (elementary).		
USEMAIDS AT IRISH OFFICE - -	23 and 35.	
g.		
g.		
TEMPORALITIES COMMISSION (IRELAND).		
KS (a) - - - - -	17 and 30.	
ses to test Handwriting and Orthography.		
ietic (including Vulgar and Decimal Frac-).		
ICE KEEPERS AND MESSENGERS - -	20 and 50.	
g.		
g.		
ietic (elementary).		
IL SERVICE COMMISSION.		
Clerks. (Scheme for Class I.)		
OWER DIVISION CLERKS.		
TICE KEEPERS AND MESSENGERS - -	21 and 35. For candidates who have been previously in the Public Service the maximum limit shall be	
riting and Orthography.		
ietic (elementary).		
nsidered as extended to five years beyond the ordinary limit, providing the ndidate was, when he first entered the Service, under the maximum limit fixed the situation to which he seeks admittance, and has since served continuously.		
MPORARY PORTERS - - - -	21 and 50.	
g.		
g.		
ntary Arithmetic.		
OURERS - - - - -	21 and 30.	
g.		
g.		

ate presenting himself within one month after attaining the prescribed age will be mination.
on p. 36.

Department, and Qualifications required.	Limits of Age.	Fee for Examination.
COLLECTOR GENERAL OF RATES, DUBLIN (OFFICE OF).		
[**M.**] CLERKS 1. Handwriting and Orthography. 2. Arithmetic (including Vulgar and Decimal Fractions and per-centages). 3. English Composition.	18 and 26.	
COLONIAL OFFICE.		
I. [**SCH. A.**] CLERKS. (Scheme for Class I.)		
II. [**O. C.**] LOWER DIVISION CLERKS.		
III. [**L. C.**] WRITERS IN CEYLON, HONG KONG CADETS, AND STRAITS SETTLEMENTS CADETS. A.—*Obligatory.* 1. Exercises designed to test Handwriting and Orthography. 2. Arithmetic (including Vulgar and Decimal Fractions). 3. Latin, and one of the following languages:—Greek, French, German, Italian.* 4. English Composition, including Précis Writing. B.—*Optional.* 5. Pure and Mixed Mathematics. 6. Ancient or Modern History, and Geography. 7. Elements of Constitutional and International Law and Political Economy. 8. Geology, Civil Engineering, and Surveying. Every candidate must show a competent knowledge of the first four subjects, and may select any two of the optional subjects.	20 and 23.	
IV. [**O. C.**] SUPERNUMERARIES IN THE PUBLIC WORKS DEPARTMENT OF CEYLON. 1. Handwriting and Orthography. 2. Arithmetic (including Vulgar and Decimal Fractions). 3. English Composition. 4. Practical Geometry. 5. Algebra to Quadratic Equations. 6. Practical Trigonometry (Heights and Distances). 7. Taking out Quantities and Estimating. 8. Chain Surveying and Levelling. 9. Plan Drawing and Tracing. No person will be eligible who has not served a pupilage of three years in the office of, or on works conducted by, a member of the Institute of Civil Engineers who was at the time in active practice.	20 and 25.	3*l.*
V. [**M.**] PORTERS, EXTRA PORTERS, AND LIBRARY MESSENGERS. 1. Reading. 2. Writing from Dictation. 3. Arithmetic (first four rules).	21 and 35.	
GIBRALTAR CIVIL ESTABLISHMENTS.		
I. [**L. C.**] ESTABLISHED CLERKS. Scheme for the competitive part of the examination for Lower Division Clerkships (*see* p. 60).		

* The qualifying test is translation into English.

Department, and Qualifications required.	Limits of Age.	Fee for Examination.
COLONIAL OFFICE—*continued.*		
GIBRALTAR CIVIL ESTABLISHMENTS—*cont.*		
II. [L. C.] SUPPLEMENTARY CLERKS. 1. Handwriting and Orthography. 2. Arithmetic (including Vulgar and Decimal Fractions). 3. English Composition of a simple character.		
COMMONS, HOUSE OF.		
DEPARTMENT OF THE SPEAKER.		
I. [M.] CLERKS IN THE VOTE OFFICE (*a*) - - 1. Handwriting and Orthography. 2. Arithmetic (including Vulgar and Decimal Fractions). 3. English Composition. 4. Book-keeping by Single Entry.	19 and 25.	
DEPARTMENT OF THE CLERK OF THE HOUSE.		
II. [M.] CLERKS AND SUPERNUMERARY CLERKS - 1. Handwriting and Orthography. 2. The power of accurate comparison of Copies with Originals. 3. Arithmetic (including Vulgar and Decimal Fractions). 4. English Composition. 5. History of England, and of the Constitution. 6. Latin or French.* 7. (For COMMITTEE CLERKS) the Elements of the Law of Evidence.	19 and 25. For Candidates who have previously been in the Public Service as Temporary Clerks or otherwise the maximum limit shall be extended to 30, provided the Candidate was under 25 when he entered the service, and has served continuously.	
III. [M.] ACCOUNTANTS - - - - - 1. Handwriting and Orthography. 2. Arithmetic (including Vulgar and Decimal Fractions). 3. English Composition. 4. Book-keeping by Double Entry.	25 and 30. Except in the case of a person already in the public service, when the maximum limit may be extended to 35.	
IV. [M.] SUPERINTENDENTS OF COPYING DEPARTMENT - 1. Reading. 2. Writing. 3. Arithmetic (elementary).	20 and 40.	
V. [M.] OFFICE MESSENGERS - - - - 1. Reading. 2. Writing (including moderate correctness of Spelling). 3. Arithmetic (elementary).	25 and 40.	
DEPARTMENT OF THE SERGEANT-AT-ARMS.		
VI. [M.] EXTRA MESSENGERS, ATTENDANTS IN THE OFFICE OF THE EXAMINERS OF PRIVATE BILLS, ATTENDANTS ON THE OFFICE OF CHAIRMAN OF WAYS AND MEANS. 1. Reading and Writing. 2. Arithmetic (elementary).	25 and 40.	
VII. [M.] ATTENDANTS IN THE LOBBY - - - 1. Reading. 2. Writing. 3. Arithmetic (elementary).	21 and 40.	
VIII. [M.] PORTERS - - - - - 1. Reading. 2. Writing (including a moderate proficiency in Spelling). 3. Elementary Arithmetic.	21 and 35.	

(*a*) *See* note on p. 36.
* The qualifying test is translation into English.

Department, and Qualifications required.	Limits of Age.	Fee for Examination.
COMMONS, HOUSE OF—*cont.*		
IX. [M.] PORTERS IN THE MEMBERS' WAITING ROOM - [No literary examination.]	21 and 40.	
CONSTABULARY (ROYAL IRISH).		
I. [O. C.] INSPECTOR GENERAL'S OFFICE. LOWER DIVISION CLERKS.		
II. [M.] INSPECTOR GENERAL'S OFFICE. MESSENGERS 1. Writing from Dictation. 2. Arithmetic (elementary).	20 and 35. Any Candidate presenting himself within one month after attaining the prescribed age will be eligible for examination.	
III. [L. C.] CADETS OF CONSTABULARY - -	21 and 26. If a candidate can show specially qualifying service as an officer in the Army, Navy, or in a Police Force, he may be admitted up to the age of 28.	

	Maximum of Marks.
Arithmetic - - - - -	150
Separate Addition - - - -	50
Orthography - - - - -	150
Handwriting - - - - -	150
Intelligence in Dictation and Orthographical paper - - - - -	100
English Composition, including Epistolary Correspondence - - - - -	200
Précis - - - - - -	150
Geography, especially that of the British Isles -	150
British History - - - - -	200
Latin * - - - - - -	200
Criminal Law:—	
Stephen's Commentaries on the Laws of England, Vol. I., Introduction, Book I.; Book II., Introductory chapter, entitled, "As to property in general;" Vol. IV., Book VI., chapters 1 to 16, omitting chapters 7 and 8	150
Law of Evidence:—	
Digest of the Law of Evidence, by Sir James Fitzjames Stephen - - - -	150
Total - - -	1,800

IV. [L. C.] *Constables for Promotion to the rank of Head Constables.*	
1. Arithmetic, the first four rules (simple and compound), Proportion, Vulgar and Decimal Fractions - - -	170
2. Separate compound addition - -	30
3. Geography of the British Isles - -	100
4. Composition - - - -	150
5. Handwriting - - - -	100
6. Orthography - - - -	100
†7. Police duties (written examination) -	100
†8. Finance regulations (written examination)	50
†9. General intelligence at *viva voce* examination in Police duties - - -	200
Total - - -	1,000

* The qualifying test is translation into English.
† The examination in subjects 7, 8, and 9 will be conducted in the Royal Irish Constabulary Office by a board of superior officers of the force.

and Qualifications required.	Limits of Age.	Fee for Examination.
ARY (ROYAL IRISH)—*cont.*		
ils to obtain one-third of the marks the subjects or whose total marks are aximum number (1,000) will be dis-		
NCLOSURE, AND TITHE OMMISSION.		
cheme under consideration.)		
RECORD KEEPERS - - - -	18 and 25.	
Dictation.	For temporary clerks and other candidates who have previously been in the Public Service the maximum limit shall be extended to 30, provided the candidate was under 25 when he entered the service and has served continuously	
cluding Vulgar and Decimal Frac-		
s.		
URAL SURVEYORS.—(Scheme under		
T DRAUGHTSMEN.—(Scheme under		
URVEYORS - - - - -	— and 35.	
Dictation.	With an extension to 40 in favour of persons who have been continuously employed in the Ordnance Survey Department from a time at which they were under 35. Temporary assistants are eligible for appointment on the establishment at any age, provided they were appointed when within the ordinary limits and have since served continuously.	
cluding Vulgar and Decimal Frac-		
s.		
g.		
R ASSISTANTS IN THE SURVEY DE-		
cheme under consideration.)		
RS - - - - - -	20 and 35.	
Dictation.	The limit may be extended to 40 in the case of persons who have been previously employed in the Civil Service, provided that they have served continuously from a period at which they were within the ordinary limits.	
mentary).		
S JUDGMENTS REGISTRY.		
—(Scheme not yet arranged.)		
RVEYORS (IRELAND).	26 and 40.	
petition under 25 & 26 Vict. c. 106.]		
PART I.	Maximum of Marks.	
g Geometry, Trigonometry, l and Integral Calculus, and - - - - -	100	
r, including Statics and Dy- , and Hydraulics, Pneumatics, s a source of Power - -	100	

Department, and Qualifications required.	Limits of Age.	Fee for Examination.

COUNTY SURVEYORS (IRELAND)—*continued.*

	Maximum of Marks.
Experimental Science, including Inorganic Chemistry, Heat, Electricity, and Magnetism - -	100
Geology and Mineralogy - - - -	40
(No candidate will be eligible who does not show some proficiency under one at least of the heads included in Part I.)	
Part II.	
Strength and other Properties of Materials, and the Calculation of Strains - - - -	100
(A.) Railway and Canal Engineering - -	140
(B.) Marine Engineering, including Harbour, Dock, Sea, and Reclamation Works - -	140
(C.) Hydraulic Engineering, including Water Supply, Sewage, and Irrigation - - -	140
(D.) County Works, including Architecture, Roads, Drainage, and River Works - - -	140
	1,000

*** Each of the groups lettered A., B., C., D., to include Designs, Estimates, Specifications, and the mechanical contrivances connected with it; and candidates will be required to show that they have been engaged in the practice of their profession on adequate works for a sufficient time, or have had in some other way satisfactory opportunities of becoming acquainted with the practice of their profession in some one of the branches thus indicated.

CRIMINAL LAW ACCOUNTS (OFFICE OF EXAMINERS OF).

I. [**SCH. A.**] Clerks.—(Scheme not yet arranged.)

II. [**N.**] Messengers - - - - - - 21 and 40.

1. Reading.
2. Writing and Spelling.
3. Arithmetic sufficient for the keeping of a petty cash book.

CROWN OFFICE (SCOTLAND).

[**N.**] Second Clerks. (Scheme not yet arranged.)

An appointment has been made under Clause VII. of the O. in C. of 4 June 1870.

CUSTOMS.

I. [**SCH. A.**] Clerks in the Solicitor's Office.—(Same as in Treasury, see p. 120.)

II. [**SCH. A.**] Other Clerks.

Appointments before the Order in Council of 12 Feb. 1876 were made under Scheme for Class II.

III. [**SCH. A.**] Draughtsmen for Tonnage.—(Scheme not yet arranged.)

partment, and Qualifications required.	Limits of Age.	Fee for Examination.
CUSTOMS—*continued.*		
].] Outdoor Officers - - -	19 and 25.	15*s.*
Marks.	*See* note * on p. 37.	
writing - - - - - 200		
graphy - - - - - 200		
metic (to Vulgar and Decimal Frac-) - - - - 300		
sh Composition - - - - 200		
SSENGERS - - - - -	20 and 35.*†‡	
USEKEEPERS - - - - -	25 and 45.*†	
ng.		
g.		
metic (the first four rules).		
ATERMEN OR BOATMEN, WATCHMEN, HOUSE ERS AT DUBLIN, AND QUARANTINE MARINERS.	20 and 30.*†‡	
JARANTINE BOYS - - - -	14 and 16.*†	
ng.		
g.		
EDS REGISTRY, IRELAND.		
.] Clerks, Transcribers.—(Appointments the Order in Council of 12 Feb. 1876 were nder Scheme for Class II.)		
vii.] Temporary Clerks - - -	20 and 30.	
vriting and Orthography.		
metic (including Vulgar and Decimal Frac- s).		
ng MS.		
USEKEEPERS - - - - -	25 and 45.	
ng.		
g.		
metic sufficient for the keeping of a petty cash .		
RTERS - - - - -	20 and 40.	
(No Literary Examination.)		
DS REGISTRY, MIDDLESEX.		
(Nothing fixed.)		

te presenting himself within one month after attaining the prescribed age will be dmation.

ed officer may be appointed to a second situation whatever his age, provided that at first appointment to the service he was eligible under the Regulations then in force uation.

rs promoted to the establishment to be admitted up to the age of 40 years, provided mployed in the Customs before they reached the maximum age, and have been em- han six months in each year. No person will be admitted who shall have attained e, although removed from another Public Department.

Department, and Qualifications required.	Limits of Age.	Fee for Examination.
DUBLIN METROPOLITAN POLICE.		
I. [O. C.] COMMISSIONERS' OFFICE. LOWER DIVISION CLERKS.		
II. RECEIVER'S OFFICE.—(Scheme not yet arranged.)		
III. [O. C.] DIVISIONAL OFFICES. LOWER DIVISION CLERKS.		
IV. [M.] MESSENGERS 1. Writing from Dictation. 2. Arithmetic (elementary).	20 and 35.*	
DUNDRUM CENTRAL CRIMINAL LUNATIC ASYLUM.		
I. [M.] CLERKS (*a*) 1. Writing from Dictation. 2. Arithmetic (first four rules and Vulgar Fractions). 3. Account Keeping.	18 to 25.*† Persons already in the Public Service to be regarded as eligible, provided their service has been continuous from a time at which they were within the ordinary limits.	
II. [M.] STOREKEEPERS (Same as for Clerks.)	25 to 40.*†	
III. [M.] STEWARDS AND GARDENERS 1. Reading. 2. Writing and Spelling. 3. Arithmetic sufficient for the keeping of a petty-cash book.	30 and 40.	
IV. [M.] ASSISTANT STOREKEEPERS	20 and 40.*†	
[M.] MATRONS, ASSISTANT MATRONS 1. Reading. 2. Writing. 3. Arithmetic (elementary).	20 and 40.*† A person originally appointed an attendant may be promoted to one of these situations, provided she was within the limits of age prescribed at the time of her original appointment.	
V. [M.] ATTENDANTS (MALE AND FEMALE), COOKS, GARDENERS, HEAD LAUNDRESS, KITCHENMAIDS. 1. Reading. 2. Writing.	20 and 40.*†	
VI. [M.] NIGHT WATCHMEN 1. Reading. 2. Writing.	23 and 44.*	

(*a*) *See* note on p. 36.

* Any candidate presenting himself within one month after attaining the prescribed age will be eligible for examination.

† Any person employed in a prison under the control of the Lord Lieutenant may be transferred to another such prison at any age, provided he has served continuously in an established capacity from a time at which he was within the ordinary limits.

Department, and Qualifications required.	Limits of Age.	Fee for Examination.
ECCLESIASTICAL COMMISSION.		
I. [SCH. A.] CLERKS. (Scheme for Class I.)		
II. [SCH. A.] SUPPLEMENTARY CLERKS.—(Appointments before the Order in Council of 12 Feb. 1876 were made under Scheme for Class II.)		
III. [M.] OFFICE KEEPERS - - - -	25 and 45.	
[M.] MESSENGERS AND PORTERS - - - 1. Handwriting and Orthography. 2. Arithmetic (elementary).	21 and 35. Persons employed as Extra Porters from a time at which their age did not exceed 35 years will be eligible as porters.	
EDUCATION DEPARTMENT.		
I. [SCH. A.] ACCOUNTANTS.—(Scheme not yet arranged.)		
II. [O. C.] LOWER DIVISION CLERKS.		
III. [M.] INSPECTOR'S ASSISTANTS - - - 1. Reading. 2. Handwriting and Orthography. 3. Arithmetic (including Practice, Bills of Parcels, Proportion, and Vulgar and Decimal Fractions). 4. Elementary Grammar (to be tested by Composition). The examination to be based on Standards 5 and 6 of the current Code.*	22 and 35.	
EXCHEQUER AND AUDIT DEPARTMENT.		
I. [SCH. A.] CLERKS. (Scheme not yet arranged.)		
II. [O. C.] LOWER DIVISION CLERKS.		
III. [M.] MESSENGERS AND LIBRARY PORTERS - - 1. Reading. 2. Writing from Dictation. 3. Arithmetic (elementary).	21 and 35.	
IV. [M.] HOUSEKEEPERS - - - - - 1. Reading. 2. Writing. 3. Arithmetic (sufficient for the keeping of a Petty Cash Book).	25 and 45.	

* The Code is "revised annually, the character of the examination for the post of Inspector's assistant, is, therefore, liable to change from year to year."

Department, and Qualifications required.	Limits of Age.	Fee for Examination.
EXCHEQUER OFFICE (SCOTLAND). *See* Queen's and Lord Treasurer's Remembrancer's Office, Scotland.		
FACTORY AND WORKSHOPS INSPECTORS' DEPARTMENT.		
[M.] INSPECTORS - - - - - - 1. Handwriting. 2. Spelling. 3. Arithmetic (including Vulgar and Decimal Fractions). 4. English Composition. 5. Précis. 6. Political Economy. 7. Mathematics, *i.e.*, Euclid (VI. Books), Algebra (to Binomial Theorem), Plane Trigonometry (to solution of Triangles). 8. Latin. 9. Greek. 10. French. 11. German. 12. Italian. 13. Any one of the six branches of Mechanical Philosophy, *i.e.*, (*a.*) Statics, (*b.*) Dynamics, (*c.*) Hydrostatics, (*d.*) Hydraulics, (*e.*) Pneumatics, and (*f.*) Heat regarded as a source of power. Candidates must pass to the satisfaction of the Civil Service Commissioners in all the first five subjects, and in three at least of the remaining subjects.	21 and 30.*	
II. [SCH. A.] CLERKS. (Appointments before the Order in Council of 12 Feb. 1876 were made under Scheme for Class II.)		
III. [M.] MESSENGERS - - - - - 1. Reading. 2. Writing from Dictation. 3. Arithmetic (elementary).	20 and 50.	
FISHERIES BOARD, SCOTLAND.		
I. [M.] CLERKS(*a*) - - - - - 1. Handwriting and Orthography. 2. Arithmetic (first four rules, and Rule of Three). 3. Book-keeping by Single Entry. 4. Correspondence.	17 and 25.	

* In reckoning age, the following allowances will be made, viz., (1) Members of the Military and Naval Services may deduct from their actual age any time during which they have served; (2) persons who have served for two full consecutive years in any Civil situation to which they were admitted with the Certificate of the Civil Service Commissioners may deduct from their actual age any time, not exceeding five years, which they may have spent in such service.

(*a*) *See* note on p. 36.

ıment, and Qualifications required.	Limits of Age.	Fee for Examination.
)ARD, SCOTLAND—*continued*.		
.r Officers - - - - -	21 and 35.	
ng and Orthography. e (the first four rules, and Cask Mensura-		
idance.		
ers - - - - - -	21 and 40.	
, OFFICE OF INSPECTORS OF (IRELAND).		
Division Clerks.		
FOREIGN OFFICE.		
ıks - - - - - -	18 and 24. As regards those who have not a home in London or in the immediate vicinity the age should be between 20 years complete and 24 years complete.	
phy and Handwriting. c, including Vulgar and Decimal Frac-		
lomposition. iting. Translation from and into French, Writing ietation, and Conversation).		
ntelligence.		
Translation from and into, Writing, Speak- Reading MS.). ıy and History of Europe from 1783 to 1847 e. lonal History of England — Hallam and		
(Euclid, Books I. to IV.). Greek. Spanish.		
ıks in Chief Clerk's Department(*a*) -	18 to 24.	
designed to test Handwriting, Accuracy of ation, and Orthography. ic (including Vulgar and Decimal Fractions Principles of Exchange). ıy (a general knowledge). ping by Double Entry (an elementary know-		
translation).		

(*a*) *See* note on p. 36.

Department, and Qualifications required.	Limits of Age.	Fee for Examination.
FOREIGN OFFICE—*continued.*		
III. [M.] Assistant Book-keepers in Chief Clerk's Department.(*a*) 1. Writing from Dictation. 2. Arithmetic (including Vulgar and Decimal Fractions). 3. Arithmetic (Purchase of Stock, and Exchange). 4. Book-keeping. 5. English Composition. 6. Précis. 7. One dead or modern Language.	18 and 26. With an extension in favour of persons who have been previously employed as Clerks in Chief Clerk's Department.	
IV. [M.] Attachés in the Diplomatic Service* - 1. Orthography. 2. Handwriting. 3. Précis writing. 4. Latin Grammar, translating and parsing a portion of some good classical Latin author, and giving the derivation of words.† 5. The first four rules of arithmetic, and decimal fractions, as given in Colenso's arithmetic. 6. Euclid (Book I.). 7. Geography. 8. French grammar, and the power of conversing fluently in the French language on ordinary topics: translation from French into English and from English into French. 9. A general knowledge of the constitutional history of England (to be acquired from Blackstone's "Commentaries," (Kerr's edition, 1862), and Hallam's "Constitutional History of England"). 10. A general knowledge of the Political History of Europe and of the United States of North America, from the Treaty of Paris, in 1815, to the Treaty of Villafranca, in 1860, comprising an acquaintance with the most important international transactions during that period. 11. A general knowledge of political economy, to be acquired from Adam Smith's "Wealth of Nations," and Mill's "Political Economy." 12. General intelligence, as evinced by the manner in which they acquit themselves under examination, and specifically by the quickness they may show in seizing the points in papers read by them or read over to them once or twice.	20 and 26.	

(*a*) *See* note on p. 36.

* Candidates who, after statutable residence, have taken a degree in one of the Universities of the United Kingdom, will be exempted from examination in all subjects, except handwriting, précis, and French.

† Candidates who have passed the first public examination in classics at one of the Universities in Great Britain or Ireland, or at the Royal Academy at Woolwich, or one of the public examinations for the Army or Navy, will be exempted from being examined in Latin; but candidates claiming this exemption must, on going up for examination, exhibit to the Civil Service Commissioners a certificate from the duly constituted authorities or others under whom they have been examined, that they have passed the first public examination in classics, in whatever manner that examination may have been conducted, and to whatever point directed.

ırtment, and Qualifications required.	Limits of Age.	Fee for Examination.
OREIGN OFFICE—*continued.*		
RETARIES.		
ɔretaries who desire a certificate of having ly passed an examination in public law (see of the Regulations for H. M. Diplomatic Ser-. 16th December 1872), will be required to mpetent general knowledge of the ordinary obligations of sovereign states in time of of belligerents and neutrals in war.		
ill also be expected to be able to give an —		
e nature and authority of international law. e sources from which it is derived, the lead-ng authorities (British and Foreign) on the ubject, and the manner of referring to and pplying those authorities. e political constitution of the several States, nd Unions of States, in Europe and America, o far as the constitution of each may affect its nternational relations. e status, duties, and privileges of public inisters, and diplomatic agents. e general principles of the law of nationality nd of domicil.		
ɔks recommended are Wheaton's *Elements of al Law*; Heffter, *Das Europäische Völker-Gegenwart*, either in the original German or nch translation of Jules Bergson, and for (5) *Treatise on Private International Law*, Chap-, III., with the Naturalization Acts, 33 Vict. 35 & 36 Vict. c. 39.		
NSLATORS TO MISSIONS - - -	25 and 35.	
in Translations from and into that language ɜse languages upon which the candidate is ed to be employed.		
REIGN SERVICE MESSENGERS - -	25 and 35.	
etic (first four rules). French, German, or Italian (conversational edge). nust be able to ride and competent to per-ɔn horseback. s British subjects.		
ERKS IN CHANCERY OF LEGATION, TEHRAN; ES TO LEGATION, TANGIER.	18 and 40.	
iting and Orthography. etic (including Vulgar and Decimal Frac-.		
SULS AND VICE-CONSULS - - - Composition and Writing from Dictation. (written and spoken).* nguage of the port at which the candidate e appointed to reside.†* (*cont.*)	25 and 50.	

or appointment as Second Vice-Consul at New York was examined in Nos. 1, 4, and 8 only.
requirement a knowledge of German may be taken for appointments to ports in ; of Spanish or Portuguese, as may be determined by the Secretary of State, for ports , Morocco, South America, and Central America; and of Italian for ports in Italy, gypt, and other ports in the Black Sea, and Mediterranean except those in Morocco

Department, and Qualifications required.	Limits of Age.	Fee for Examination.
FOREIGN OFFICE—*continued.*		
CONSULS AND VICE-CONSULS—*cont.*		
4. British Mercantile and Commercial Law. [Text Book, Smith's Compendium of Mercantile Law, Book II. chap. 1 to 4, Book III. chap. 1 to 4, and 7.]		
5. Arithmetic (including Vulgar and Decimal Fractions).		
X. [O. C.] STUDENT INTERPRETERS IN CHINA, JAPAN, AND SIAM.	18 and 24.	
Obligatory:		
1. Handwriting and Orthography.		
2. Arithmetic (including Vulgar and Decimal Fractions).		
3. English Composition.		
Optional:		
4. Précis.		
5. Geography.		
6. Euclid (Books I. to IV.).		
7. Latin.		
8. French.		
9. German.		
10. The elements of Civil and Criminal Law; the Text Books being Smith's Mercantile Law, and Archbold's Pleading and Evidence in Crimina Cases. Candidates must be unmarried and must be British subjects.		
XI. [O. C.] STUDENT DRAGOMANS - - -	18 and 24.	
Obligatory:		
1. Reading, Handwriting, and Orthography.		
2. Arithmetic (including Vulgar and Decimal Fractions).		
3. English Composition.		
4. French.		
5. Latin.		
Optional:		
1. Ancient Greek.		
2. Italian.		
3. German.		
Candidates must be natural born subjects of Her Majesty.		
XII. [M. Cl. vii.] SHIPPING CLERKS AT SHANGHAE. (Appointments to be made under Clause VII. of the Order in Council of 4th June 1870.)		
XIII. [M.] CLERKS IN MIXED COMMISSION COURTS -	18 and 24.	
1. Handwriting and Orthography.		
2. Précis.		
3. French (copying and translation).		
XIV. [M.] CONSULAR CLERKS IN CHINA, JAPAN, AND SIAM	17 and 40.	
[M.] CLERKS IN SUPREME COURT, SHANGHAE -	17 and 50.	
1. Handwriting and Orthography.		
2. Arithmetic (including Vulgar and Decimal Fractions)		
3. One Foreign Language* (speaking, translating, and copying).		

* For Consular Clerks at Constantinople, French has been prescribed.

Department, and Qualifications required.	Limits of Age.	Fee for Examination.
FOREIGN OFFICE—*continued.*		
XV. [M.] HOME SERVICE MESSENGERS; OFFICE-KEEPERS; OFFICE PORTERS; DOOR PORTERS; EXTRA MESSENGERS AT MISSIONS ABROAD; CHIEF USHER TO THE SUPREME COURT, SHANGHAE; AND OTHERS EMPLOYED IN SUBORDINATE CAPACITIES. 1. Reading. 2. Writing from Dictation. 3. Arithmetic (first four rules). Candidates must be British subjects.	17 and 40.	
XVI. [M.] HOUSEKEEPERS - - - -	— and 50.	
1. Reading. 2. Writing from Dictation. 3. Arithmetic (sufficient for simple accounts).		
XVII. [M.] CONSTABLES OR GAOLERS TO H.M. CONSULS AND VICE-CONSULS AT TREATY PORTS IN CHINA AND JAPAN, DRAGOMANS, MOONSHEES, AND GHOLAMS. 1. Reading. 2. Writing. 3. Addition and Subtraction (simple and compound).	20 and 35. With exception up to 45 in the case of persons who have served continuously in the army or navy from a period at which they were under 35.	
XVIII. [M.] EUROPEAN GUARDS AT THE LEGATIONS IN CHINA AND JAPAN. [No literary examination.]	20 and 45.	
FOUR COURTS MARSHALSEA (IRELAND).		
(Same as for Prisons Service, Ireland.)		
FRIENDLY SOCIETIES' REGISTRY.		
I. [M.] CHIEF CLERKS AND ASSISTANT REGISTRARS -	25 and 35.	
1. Handwriting and Orthography. 2. Arithmetic (including Vulgar and Decimal Fractions). 3. English Composition. 4. Law relating to Friendly Societies.		
II. [O. C.] LOWER DIVISION CLERKS.		
III. [M.] MESSENGERS - - - - -	21 and 35.	
1. Reading. 2. Writing and Orthography. 3. Elementary Arithmetic.		

Department, and Qualifications required.	Limits of Age.	Fee for Examination.
HABITUAL CRIMINALS REGISTRY (IRELAND).		
[M.] Clerks (*a*) - - - - - - 1. Handwriting and Orthography. 2. Arithmetic (elementary).	18 and 35.	
HIGH COURT OF JUSTICE (ENGLAND).		
CHANCERY DIVISION.*		
I. [M.] Clerks in Crown Office (*a*) - - 1. Handwriting (including German text and engrossing hand) and Orthography. 2. Arithmetic (elementary). 3. English Composition.	20 to 26.	
QUEEN'S BENCH DIVISION.		
I. [M.] Clerks (*a*) - - - - - 1. Exercises designed to test Handwriting and Orthography. 2. Writing from Dictation or transcribing written documents. 3. Comparison of Copies with Originals. 4. Arithmetic - - - - } 5. English History - - - } elementary. 6. Geography - - - - } 7. Latin or French, at option of candidate }	18 and 30.	
II. [M.] Housekeepers - - - - - 1. Reading. 2. Writing.	25 and 40.	
III. [M.] Messengers (Pleas side) - - - 1. Handwriting and Orthography.	16 and 30.	
IV. [M.] Messengers (Crown Office) - - 1. Reading. 2. Writing.	20 and 45. Except in the case of pensioners from the army or navy, who may be appointed if under 50.	
COMMON PLEAS DIVISION.		
[M.] Clerks (*a*) - - - - - - 1. Exercises designed to test Handwriting and Orthography. 2. Writing from Dictation or transcribing written documents. 3. Comparison of Copies with Originals. 4. Arithmetic - - - - } 5. English History - - - } elementary. 6. Geography - - - - } 7. Latin or French, at option of candidate }	18 and 30.	

(*a*) *See* note on p. 36.

* These rules are under revision.

tment, and Qualifications required.	Limits of Age.	Fee for Examination.
' OF JUSTICE (ENGLAND)—*continued.*		
EXCHEQUER DIVISION.		
:s (*a*) - - - - - -	18 and 30. An extension of five years will be allowed in favour of persons who have served continuously in any Public Department from a period at which they were within the limits of age ordinarily prescribed.	
s designed to test Handwriting and Ortho-		
from Dictation or transcribing written docu-		
son of Copies with Originals.		
tic - - - - } elementary.		
History - - - }		
hy - - - - }		
French, at option of candidate }		
ENGERS IN MASTERS' OFFICE - -	20 and 35.	
iting.		
aphy.		
tic (elementary).		
AND DIVORCE AND ADMIRALTY DIVISION.		
S IN PROBATE AND DIVORCE REGISTRY.(*a*)	18 and 25.	
s to test Handwriting and Orthography.		
tic (including Vulgar and Decimal Frac-		
;.		
son of Copies with Originals.		
Composition.		
hy.		
History (the leading points).		
ion from Latin or a Foreign Language.		
TANT CLERK IN COURT (PROBATE AND :).	25 and 40.	
ting and Orthography.		
ɔd.		
le Copying.		
tic (Elementary).		
.son of Copies with Originals.		
OPYING CLERKS IN PROBATE AND DIVORCE Y.	16 and 25.	
ting and Orthography.		
le copying.		
tic (elementary).		
son of Copies with Originals.		
ORARY COPYING CLERKS IN PROBATE AND REGISTRY.	16 and 40.	
ERS AND MESSENGERS (PROBATE AND).	17 and 36. Persons already in the Public Service are eligible as messengers up to any age, provided they have served continuously from a period at which they were under 36.	
from Dictation.		
tic (elementary).		

(*a*) *See* note on p. 36.

Department, and Qualifications required.	Limits of Age.	Fee for Examination.
HIGH COURT OF JUSTICE (ENGLAND)—*continued.*		
VI. [M.] PORTERS (PROBATE AND DIVORCE) - - 1. Reading. 2. Writing.	17 and 36.	
VII. [M.] CLERKS IN ADMIRALTY REGISTRY (*a*) - - 1. Handwriting and Orthography. 2. Transcribing. 3. Arithmetic (including Vulgar and Decimal Fractions). 4. English Composition. 5. Précis. 6. One of the following subjects: (*a.*) Latin or a Modern Language.* (*b.*) The leading points of English or Modern History. (*c.*) Geography. (*d.*) Algebra, Euclid, or any branch of Mathematics or Science.	17 and 35.	
VIII. [M.] CLERKS IN ADMIRALTY MARSHAL'S OFFICE - 1. Handwriting and Orthography. 2. Transcribing. 3. Arithmetic (the first four rules, Practice, and the Rule of Three). 4. Grammatical structure of sentences of a simple character.	17 and 30.	
IX. [M.] MESSENGERS IN ADMIRALTY MARSHAL'S OFFICE.	20 and 35.†	
[M.] USHERS - - - - - - 1. Writing from Dictation. 2. Arithmetic (Elementary).	20 and 40.	
X. [M.] SUPERINTENDENTS OF SHIPKEEPERS, AND SHIPKEEPERS (ADMIRALTY). 1. Reading. 2. Writing.	20 and 40. If previously employed as shipkeeper a person may be appointed up to 45, provided he was under 40 when first employed. The permanent shipkeeper may be promoted to be superintendent of shipkeepers even though above the age of 40.	

HIGH COURT OF JUSTICE (IRELAND).

CHANCERY DIVISION.

[O. C.] JUNIOR CLERKS. (Scheme not yet arranged.)

QUEEN'S BENCH DIVISION.

[O. C.] JUNIOR CLERKS. (Scheme not yet arranged.)

(*a*) *See* note on p. 36. * The qualifying test is translation into English.
† Candidates may deduct 5 years from their actual age if they have served in the Royal Navy continuously for that period.

Department, and Qualifications required.	Limits of Age.	Fee for Examination.
HIGH COURT OF JUSTICE (IRELAND)—*continued.*		
COMMON PLEAS DIVISION.		
[O. C.] JUNIOR CLERKS. (Scheme not yet arranged.)		
EXCHEQUER DIVISION.		
[O. C.] JUNIOR CLERKS. (Scheme not yet arranged.)		
PROBATE AND MATRIMONIAL DIVISION.		
I. [O. C.] JUNIOR CLERKS. (Scheme not yet arranged.)		
II. [M.] MESSENGERS, OFFICE KEEPERS, HOUSEKEEPERS, PORTERS, TEMPORARY PORTERS, &c. 1. Reading. 2. Writing.	21 and 38.	
HOME OFFICE.		
I. [SCH. A.] CLERKS. (Scheme not yet arranged.)		
II. [O. C.] LOWER DIVISION CLERKS.		
III. [SCH. A.] ACCOUNTANTS. (Scheme not yet arranged.)		
IV. [SCH. A.] SECRETARIES TO THE LIEUTENANT GOVERNOR OF GUERNSEY. (Scheme not yet arranged.)		
V. [M.] OFFICE KEEPERS - - - -	30 and 45.	
[M.] MESSENGERS - - - - -	20 and 40. For Queen's Messengers the limit is to be 50 in the case of persons nominated by way of promotion, having entered the Home Office while within the limits, and served continuously.	
1. Reading. 2. Writing from Dictation. 3. Arithmetic (elementary).		
VI. [M.] DOOR-KEEPERS, OFFICE PORTERS, AND PORTERS 1. Reading. 2. Writing.	20 and 40.	
INDIA AUDIT OFFICE.		
I. [O.C.] CLERKS (SUPERIOR CLASS) - - -	18 and 22.	3*l.*
1. Handwriting and Orthography. 2. Arithmetic (including Vulgar and Decimal Fractions). (*Special importance will be attached to rapidity of working.*) 3. English Composition. 4. Book-keeping. 5. The weights, measures, and currencies of the principal commercial nations of the world. 6. Geography (especially Asiatic Geography).		

Department, and Qualifications required.	Limits of Age.	Fee for Examination.
INDIA AUDIT OFFICE—*continued.*		
CLERKS (SUPERIOR CLASS)—*cont.*		
7. Latin (translation from and into). 8. Euclid, Books 1, 2, 3, 4, and 6. 9. Algebra, up to and including the Binomial Theorem. 10. French or German (translation from and into, and speaking). No candidate will be eligible who does not satisfy the Civil Service Commissioners in the first six subjects.		
II. [O.C.] CLERKS (LOWER DIVISION) - - -	16 and 20.	10s.
Preliminary Examination. 1. Handwriting. 2. Orthography. 3. Arithmetic (to Vulgar and Decimal Fractions).		
Competitive Examination. 1. Handwriting. 2. Orthography. 3. Arithmetic. 4. Copying MS. (to test accuracy). 5. Indexing or Docketing. 6. Digesting Returns into Summaries. 7. English Composition. 8. Geography. 9. English History. 10. Book-keeping. Candidates will be at liberty to offer themselves for examination in any or all of these subjects. No subjects are obligatory.		1*l.*
INDIA CIVIL SERVICE.		
The Examination will take place only in the following branches of knowledge:—	17 and 19. For the year 1880. "Above 17 on the 1st of June and under 19 from the 1st Jan." At subsequent competitions above 17 and under 19 on 1st June of the year in which the competition is held.	5*l.*

	Marks.
English Composition - - - -	800
History of England (including a period selected by the candidate) - - - -	300
English Literature (including books selected by the candidate) - - - -	300
Greek - - - - - -	600
Latin - - - - - -	800
French - - - - - -	500
German - - - - -	500
Italian - - - - - -	400
Mathematics (pure and mixed) - -	1,000
Natural Science, that is, the elements of any two of the following sciences, viz.:— Chemistry, 500; Electricity and Magnetism, 300; Experimental Laws of Heat and Light, 300; Mechanical Philosophy, with outlines of Astronomy, 300.	
Logic - - - - - -	300
Elements of Political Economy - -	300
Sanskrit - - - - -	500
Arabic - - - - - -	500

Candidates are at liberty to name any or all of these branches of knowledge. No subjects are obligatory.

Department, and Qualifications required.	Limits of Age.	Fee for Examination.
INDIA FOREST DEPARTMENT. (Appointments are made by competition among candidates nominated by the Secretary of State.) 1. English writing from Dictation and English Composition. 2. Arithmetic in all its branches. 3. Algebra, up to and including the Binomial Theorem. 4. Geometry (Euclid, Books I.–IV. and VI.) and Plane Trigonometry. 5. Freehand Drawing. 6. Surveying, Land measuring, Plan drawing, and the use and adjustment of Instruments. 7. A good colloquial knowlege of French or German,* to be tested partly by dictation, with the facility of translating from one of these languages. A preference will be given to those candidates who, in addition to the above, show proficiency in translation into French or German,* and in the elements of Mechanics and Physics, Chemistry, Botany, Geology, and Mineralogy. No candidate should apply who cannot ride.	17 and 21.	
(ROYAL) INDIAN ENGINEERING COLLEGE. (Appointments made by open competition.) (1.) English (Composition, History, and Literature) - - - - - 750 (2.) Mathematics (pure and mixed) - - 2,500 (3.) Latin (translation from and into) - - 1,000 (4.) Greek ditto ditto - - 1,000 (5.) French (translation from and into, and dictation) - - - - - 750 (6.) German ditto ditto ditto 750 (7.†) Inorganic chemistry - - - 700 (8.†) Heat and light - - - - 700 (9.†) Electricity and magnetism - - 700 (10.†) Geology and physical geography - - 700 (11.) Mechanical drawing of geometrical figures, plane and solid, use and construction of scales, perspective - - - 500 (12.) Freehand (figure and landscape) drawing - 500 Marks assigned. Of these subjects two will be compulsory, viz. :— (1.) English Composition to the extent of a candidate's being able to write grammatically and with correct spelling. An exercise will also be given in writing English from dictation. (2.) The following branches of mathematics, viz., Arithmetic, Algebra, Geometry (first four and sixth books of Euclid), Mensuration, Plane Trigonometry, and the elements of Statics and Dynamics, in each of which the candidate will be required to show competent proficiency. A deduction of 200 marks will be made from the marks gained by a candidate in each subject at the competitive examination, except Mathematics, in which there will be	17 and 20. (On 1st day of July.)	

* German was omitted from the list of subjects for the competition of November 1876 and 1877, as the candidates selected on those occasions were to proceed to France for training.
† No candidate may take up more than three out of these four subjects.

Department, and Qualifications required.	Limits of Age.	Fee for Examination.
(ROYAL) INDIAN ENGINEERING COLLEGE—*cont.*		
no deduction, and Mechanical Drawing, in which only 100 marks will be deducted. But a part or the whole of such deduction may be remitted in cases of special proficiency exhibited in any subject. *English Subjects for* 1879. *Shakespeare* - Macbeth. As you like it. *Bacon* - - Essays. *Milton* - - Paradise Lost, Books I. and II. *Pope* - - Essay on Man. *Macaulay* - Essay on Warren Hastings. Biography of Wm. Pitt (the younger). The examination in English History will be limited to the period A.D. 1800 to A.D. 1827 (inclusive), with special reference to the war in the Peninsula.		
INDIAN TELEGRAPH DEPARTMENT. (Appointments made by limited competition among candidates nominated by the Secretary of State for India.) The scheme of examination is the same as that for the Royal Indian Engineering College. (*See* above.)	17 and 20 on 1st of July.	
INDIA OFFICE.		
I. [SCH. A.] CLERKS. (Scheme for Class I.)		
II. [L. C.] CLERKS IN THE POLITICAL DEPARTMENT - 1. Handwriting and Orthography. 2. Arithmetic. 3. English Composition. 4. French. 5. History of England (including that of her possessions in the East) and Geography. 6. General intelligence. 7. Latin.* *Optional.* 1. German. 2. Italian.	18 and 24.	
III. [SCH. A.] CLERKS OF THE SUPERIOR CLASS IN THE ACCOUNTS AND STORES BRANCHES. 1. Handwriting and Orthography. 2. Arithmetic (including Vulgar and Decimal Fractions). N.B.—*Special importance will be attached to rapidity of working.* 3. English Composition. 4. Book-keeping. 5. The weights, measures, and currencies of the principal commercial nations of the world. 6. Geography (especially Asiatic Geography). 7. Latin (translation from and into). 8. Euclid, Books 1, 2, 3, 4, and 6. 9. Algebra, up to and including the Binomial Theorem. 10. French or German (translation from and into, and speaking). No candidate will be eligible who does not satisfy the Civil Service Commissioners in the first six subjects.	18 and 22. *See* note * on p. 87.	3*l.*

* The qualifying test is translation into English.

and Qualifications required.	Limits of Ag
OFFICE—*continued.*	
KEEPERS - - - -	16 and 20.
inary Examination.	*See* note * on p.
Vulgar and Decimal Fractions).	
Competition.	
d Orthography.	
o test accuracy).	
ocketing.	
ns into Summaries.	
ition.	
.	
be at liberty to offer themselves for or all of these subjects. No sub-	
s IN REGISTRY BRANCH. (Appoint- rder in Council of 12 Feb. 1876 me for Class II.)	
RS, OFFICE PORTERS, AND MES-	18 and 35. Unless already i Service in some capacity.
l Orthography. nentary).	
IN STORE DEPARTMENT - -	18 and 35.
ND REVENUE.	
. (Scheme for Class I.)	
s CLERKS IN THE SOLICITOR'S OF- (Same as for Clerks in Solicitor's *see* p. 129, II.)	
CLERK IN THE SOLICITOR'S OFFICE. easury, *see* p. 120, III.)	
o CLASS CLERK IN THE SOLICITOR'S BURGH.	18 and 24. *See* note* on p.
o test accuracy).	
ition.	
keting.	
as into Summaries.	
.	
otch Law. (The prominent parts of ubjects in the treatises of Bell or	

Department, and Qualifications required.	Limits of Age.	Fee for Examination.
INLAND REVENUE—*continued.*		
IV. [O. C.] Lower Division Clerks. Candidates for the Accountant and Comptroller General's Office are required to have passed in the course of the competition a satisfactory examination in Book-keeping by Double Entry.		
V. [SCH. A.] Assistant Surveyors of Taxes. (Scheme for Class I.) Appointments to vacancies are made subject to a test examination in book-keeping to be passed before the termination of probation.		
VI. [SCH. A.] Practical Mechanicians in the Stamping Office.	**24 and 30.**	
Part I.—Preliminary Examination. 1. Handwriting. 2. Orthography. 3. Arithmetic (to Vulgar and Decimal Fractions).	*See* note, * p. 37.	10*s.*
Part II.—Competitive Examination. 1. Arithmetic and elementary Algebra and Geometry. 2. Mechanical Engineering. 3. Metallurgy (elementary). 4. The strength and properties of Materials and Calculation of Strains. 5. Drawing Machinery to scale and by the eye. Candidates will be required to show a competent knowledge of each of these subjects. No candidate will be eligible who has not passed with credit through the various branches of a Mechanical Engineer's establishment, and satisfactory evidence on this point will be required.		1*l.*
VII. [SCH. A.] Second Class Assistants of Excise. (A.) *Obligatory:* Marks. 1. Handwriting - - - - 400 2. Orthography - - - - 400 3. Arithmetic (to Vulgar and Decimal Fractions) - - - - - 400 4. English Composition - - - 400 (B.) *Optional:* 5. Higher Arithmetic, including Mensuration, Square and Cube Root, &c. - - 400 6. Geography, especially that of the British Isles - - - - - 400 Candidates must be unmarried and without family.	**19 and 22.** On the first day of the month in which the examination is held. *See* note,* p. 37.	1*l.*
VIII. [W.] Warehousemen, Stampers, Packers, Warehouse Porters, Binders, Office Keepers, Messengers, Porters at Glasgow, and Will Keepers or Sorters. 1. Reading. 2. Writing from Dictation. 3. Arithmetic (elementary).	**20 and 35.*†** Stampers and warehousemen selected from among the machine boys must be over 16. Warehousemen promoted from junior warehousemen are eligible from 17 years of age.	

* A person nominated to this Department who has previously and up to the time of such nomination been in continuous employment of the Government, may be admitted, whatever his age, provided he has served from a time at which he was within the limits of age for the situation to which it is proposed to appoint him.

† Any candidate presenting himself within one month after attaining the prescribed age will be eligible for examination.

Department, and Qualifications required.	Limits of Age.	Fee for Examination.
LANCASTER, DUCHY OF.		
[L. C.] CLERKS - - - - - -	18 and 25.	
1. Handwriting and Orthography. 2. Writing from Dictation and Copying Manuscripts (to test accuracy). 3. Indexing, Docketing, and Précis writing. 4. English Composition. 5. English History. 6. Geography of England. 7. Arithmetic (including Vulgar and Decimal Fractions). 8. Bookkeeping. 9. One of the following— Latin.† Greek.† French.† Mathematics. A branch of Science.		
LAND REGISTRY OFFICE.		
[M.] HOUSEKEEPERS - - - - -	25 and 45.	
1. Reading. 2. Writing. 3. Elementary Arithmetic, sufficient for the keeping of a petty cash book.		
LANDED ESTATES RECORD OFFICE (IRELAND).		
I. [L. C.] CLERKS (*a*) - - - - -	18 and 22.	
(*t*) 1. Writing from Dictation. (*t*) 2. Arithmetic (including Vulgar and Decimal Fractions). (*t*) 3. Surveying. (*t*) 4. Bookkeeping. (*t*) 5. English Composition. 6. Précis. 7. Geography. 8. Irish and English History. (*t*) 9. Latin.† (*t*) 10. French.† Candidates will be required to pass a preliminary examination in the subjects marked (*t*).		
II. [M.] MESSENGERS - - - - -	20 and 35.	
1. Writing from Dictation. 2. Arithmetic (elementary).		
LAND REVENUE RECORD OFFICE.		
I. [SCH. A.] DEPUTY KEEPERS. An appointment has been made under Clause VII. of the Order in Council of 4th June 1870.		

(*a*) *See* note on p. 36.
† The qualifying test is translation into English.

Department, and Qualifications required.	Limits of Age.	Fee for Examination.
ID REVENUE RECORD OFFICE—*continued*.		
ICE. A.] Assistant Keepers. (Appointments before Order in Council of 12 Feb. 1876 made under Scheme for Class II.)		
.] Office Keepers - - - - -	21 and 40.	
Reading.		
Writing from Dictation.		
Arithmetic (elementary).		
LAW COURTS (SCOTLAND).		
HIGH COURT OF JUSTICIARY.		
Assistant Clerks - - - - - -	25 and 35.	
Reading.		
Handwriting.		
Orthography.		
Arithmetic (first four rules).		
Geography of Scotland (especially of its legal divisions).		
Scotch Law, including:—		
1. Elementary principles of Criminal Law.		
2. Knowledge of law terms and phrases.		
3. History and Practice of the Justiciary Court.		
FICE OF ACCOUNTANT IN BANKRUPTCY.		
Clerk - - - - - - - -	17 and 26. With an extension of five years in favour of persons who have served in the Department from a time when they were within the ordinary limits.	
Handwriting.		
Orthography.		
Arithmetic (including Vulgar and Decimal Fractions).		
English Composition.		
LOAN FUND BOARD (IRELAND).		
.] Senior Clerks (*a*) - - - - -	19 and 35.†	
.] Clerks (*a*) - - - - - -	18 and 25.† In the case of persons who have previously been employed in the Public Service the limit is to be 40, provided the candidate has served continuously, and was first employed while under 25.	
. Writing from Dictation.		
. Arithmetic (including Vulgar and Decimal Fractions).		
. Précis.		
.] Messengers - - - - - -	18 and 35.†	
. Writing from Dictation.		
. Arithmetic (elementary).		
IAL GOVERNMENT BOARD (ENGLAND).		
. C.] Lower Division Clerks.		

See note on p. 36.
† candidate presenting himself within one month after attaining the prescribed age will be for examination.

Department, and Qualifications required.	Limits of Age.	Fee for Examination.
LOCAL GOVERNMENT BOARD (ENGLAND)—*continued.*		
II. [M.] MESSENGERS 1. Reading. 2. Writing. 3. Spelling. 4. First four rules of Arithmetic (simple and compound).	18 and 40.	
III. [M.] TEMPORARY MESSENGERS 1. Reading. 2. Writing. 3. First four rules of Arithmetic (simple and compound).	18 and 45.	
IV. [M.] HALL PORTERS 1. Reading manuscript and print. 2. Writing. 3. Arithmetic (sufficient for the keeping of a petty cash book).	21 and 40.	
LOCAL GOVERNMENT BOARD (IRELAND).		
I. [M.] AUDITORS OF UNION ACCOUNTS 1. Handwriting and Orthography. 2. Copying. 3. Arithmetic (including Vulgar and Decimal Fractions). 4. English Composition. 5. Précis. 6. Geography of the British Islands. 7. Book-keeping by Double Entry. 8. Irish Poor Law.	28 and 50.	
II. [O. C.] LOWER DIVISION CLERKS.		
III. [M.] MESSENGERS 1. Reading. 2. Writing. 3. Arithmetic (elementary).	18 and 35.	
LONDON GAZETTE OFFICE.		
I. [SCH. A.] CLERKS. (Appointments before the Order in Council of 12 Feb. 1876 were made under Scheme for Class II.)		
II. [M.] INDEX MAKERS 1. Reading. 2. Writing. 3. Arithmetic (elementary). 4. Indexing.	18 and 45.	
III. [M.] WAREHOUSEMEN 1. Reading. 2. Writing. 3. Arithmetic (elementary).	— and 45.	

partment, and Qualifications required.	Limits of Age.	Fee for Examination.
LONDON UNIVERSITY.		
ISTANT CLERKS TO THE SENATE (*a*) - - writing, and power to copy correctly in Eng-, French, Latin, Greek, and Mathematics. ng from Dictation. metic (including Vulgar and Decimal Fractions). sh Composition (especially epistolary). e. unt-keeping.	25 and 35.	
SUPPLEMENTAL CLERKS (*a*) - - - *y Examination:* writing and Orthography. ng. metic (first four rules). *Technical Examination:* ing from MSS. osition. sh Language. metic (Vulgar and Decimal Fractions, Aver-, and Plain Accounts). *amination* (to take place when candidates are e result of the other); Latin, French, Algebra Equations, Euclid (Book I.), Modern Geogra-ish History, or the elements of some one	18 and 24.	
FFICE KEEPERS - - - - - writing and Spelling. metic (elementary). ng down from memory the substance of matter ly communicated.	30 and 40.	
ESSENGERS - - - - - writing. ing. metic (elementary).	16 and 30.	
Y MESSENGERS - - - - ng a written paper. ng. ing. metic (the first four rules).	13 and 18.	
ORTERS AND LABOURERS - - - ing. ng.	21 and 35.	
HOUSEMAIDS AND ASSISTANT HOUSEMAIDS - ary examination.)	17 and 35.	
OCATE OF SCOTLAND (OFFICE OF).		
E KEEPERS AND MESSENGERS - - ng. ng from Dictation. metic (first four rules).	25 and 40.	

(*a*) *See* note on p. 86.

Department, and Qualifications required.	Limits of Age.	Fee for Examination.
LORDS, HOUSE OF.		
DEPARTMENT OF THE LORD CHANCELLOR.		
I. [M.] MESSENGER IN CROWN OFFICE 1. Writing. 2. Spelling. 3. Arithmetic (elementary).	21 and 35. With an extension up to 40 in the case of pensioners from the Army or Navy, and of persons who have served continuously in the Civil Service from a time at which they were under 35.	
DEPARTMENT OF THE CLERK OF THE PARLIAMENTS.		
I. [M.] CLERKS 1. Writing (very clear, and similar to that adopted by the Foreign Office) and Orthography. 2. Power of accurate comparison with originals. 3. Arithmetic (including Vulgar and Decimal Fractions). 4. English Composition. 5. History of England and of the Constitution. 6. Latin translation and French (translation from and into, writing from dictation, and speaking).	18 and 25. With an extension to 30 in the case of any candidates who may have served continuously in some other branch of the Public Service, provided they were under 25 when they were admitted.	
II. [M.] SUMMONING OFFICERS 1. Handwriting and Orthography. 2. Arithmetic (first four rules). 3. Book-keeping by Double Entry. 4. Correspondence.	21 and 35.	
III. [M.] MESSENGERS	21 and 35. With an extension to 45 in the case of persons continuously employed in the Civil Service from a time at which they were below 35.	
[M.] TEMPORARY MESSENGERS 1. Handwriting and Orthography. 2. Arithmetic (first four rules).	18 and 40.	
DEPARTMENT OF THE LORD GREAT CHAMBERLAIN.		
IV. [M.] CLERKS, RESIDENT SUPERINTENDENTS 1. Handwriting and Orthography. 2. Elementary Arithmetic. 3. English Composition.	25 and 45.	
V. [M.] HOUSEKEEPERS IN THE HOUSE OF LORDS	25 and 45. With an exception in favour of persons continuously employed in the Civil Service from a time at which they were below 45.	
[M.] HOUSEKEEPERS IN THE LORD GREAT CHAMBERLAIN'S OFFICE.	20 and 35. With an extension to 45 in the case of persons appointed also to the situation of housekeeper in the Crown Office.	
[M.] HOUSEKEEPERS IN THE CROWN OFFICE 1. Reading. 2. Writing. 3. Addition and Subtraction (simple and compound).	25 and 45.	
VI. [M.] MESSENGER 1. Reading aloud. 2. Writing. 3. Spelling. 4. Arithmetic (the first four rules).	20 and 35. With an exception up to any age in favour of discharged soldiers and policemen.	

, and Qualifications required.	Limits of Age.	Fee for Examination.
, HOUSE OF—*continued.*		
THE USHER OF THE BLACK		
PERS AND MESSENGERS - -	21 and 35.	
rithmetic.		
BOARD (SCOTLAND).		
- - - - -	16 and 25.	
nd Orthography.		
cluding Vulgar and Decimal Fractions).		
e.		
by Single Entry.		
MMISSION (ENGLAND).		
ts. (Scheme for Class I.)		
DIVISION CLERKS.		
DS - - - - -	20 and 30.	
ND MESSENGERS - - -	21 and 35.	
Dictation.		
rst four rules).		
NGERS - - - -	15 and 16.	
e first four rules).		
UMS, IRELAND (OFFICE OF SPECTORS OF).		
ts. (Scheme not yet arranged.)		
S AND TEMPORARY MESSENGERS -	20 and 35.	
Dictation.		
ementary).		
POLICE (COMMISSIONERS' OFFICE).		
- - - - -	18 and 25.	
nd Orthography.		
cluding Vulgar and Decimal Frac-		
osition.		
y.		
aphy.		
nch Translation.		
n *Police Constables for Promotion*		
s *or Third Class Inspectors; Tem-*		
s to be Permanent Sergeants.		
Dictation.		
rt of circumstances of supposed acci-		
rence.		
otation, and Compound Addition.		

(a) *See* note on p. 36.

Department, and Qualifications required.	Limits of Age.	Fee for Examination.
METROPOLITAN POLICE (COMMISSIONERS' OFFICE)—*continued.*		
III. [M.] *Sergeants for Promotion to be Inspectors; Third Class Inspectors for Promotion to be Second Class Inspectors; and Temporary Inspectors to be Permanent Inspectors.* 1. Reading. 2. Writing from Dictation. 3. Ordinary English Composition, including Punctuation. 4. Arithmetic, first four Rules, simple and compound. 5. Writing a report of case on which directions are given to a sergeant or constable, stating what the directions are. 6. A supposed statement of facts will be made on which a charge may be received or refused; the sergeant is to receive and enter same on a Charge Sheet, or to refuse to receive the charge (according to his judgment), and enter same on Refused Charge Sheet.		
IV. [M.] *Inspectors for Promotion to be Superintendents.* 1. Reading. 2. Writing from Dictation. 3. Ordinary English Composition, including Punctuation. 4. Arithmetic, first four rules, Reduction and Proportion. 5. To make out a Morning State, the strength of Division and variations being supplied. 6. To make out an estimate for Divisional Pay from the numbers on Morning State. 7. To abstract from a set of papers to be supplied the leading points of a case necessary to be brought under the notice of Commissioner, and embody the same in a Special Report.		
METROPOLITAN POLICE COURTS.		
I. [SCH. A.] CLERKS - - - - - -	20 and 30. *See* note * on p. 37.	2*l.*
Obligatory Subjects. 1. Reading aloud. 2. Handwriting. 3. Orthography. 4. Arithmetic (including Vulgar and Decimal Fractions). 5. Copying imperfect manuscripts. 6. Indexing or Docketing. 7. Digesting Returns, &c. into Summaries. 8. English Composition. 9. Proceedings before Magistrates (Jervis's Acts). 10. Law of Evidence. ("Powell's Principles and Practice of the Law of Evidence," by Cutler and Griffin, Part I., chapters 1, 2, 3, 4, 5, 6, 7, 8, 12, 17; Part II., chapters 1, 2, 3, 4, and Part III., chapters 1, 2, 6.) 11. Book-keeping by Single Entry. Candidates failing in any of the above subjects will not be eligible.		

Department, and Qualifications required.	Limits of Age.	Fee for Examination.
METROPOLITAN POLICE COURTS—*continued.*		
CLERKS—*cont.*		
Optional Subjects. 1. Latin (translation into English, and Grammar). 2. French (translation from and into, and Oral Examination). 3. German (translation from and into, and Oral Examination). 4. Geography and English History. Not more than one of these subjects can be taken up.		
II. [M.] ASSISTANT CLERKS AND USHERS - -	30 and 40. Persons appointed ushers whilst under 40 will be eligible for appointment as Assistant Clerks up to 55.	
1. Reading. 2. Writing from dictation. 3. Copying letters. 4. Elementary Arithmetic.		
III. [M.] OFFICE-KEEPERS AND GAOLERS - -	30 and 50.	
[M.] MESSENGERS AND DOOR-KEEPERS - -	25 and 39.	
1. Reading. 2. Writing.		
METROPOLITAN POLICE (RECEIVER'S OFFICE).		
I. [M.] CLERKS - - - - - -	18 and 35.	
1. Handwriting and Orthography. 2. Arithmetic (including Vulgar and Decimal Fractions). 3. English Composition. 4. Book-keeping by Double Entry. 5. English History. 6. English Geography. 7. Précis. The subjects numbered 5, 6, and 7, are not obligatory.		
II. [M.] STOREKEEPERS - - - - -	30 and 45.	
[M.] ASSISTANT STOREKEEPERS - - -	25 and 35.	
1. Handwriting and Orthography. 2. Arithmetic (elementary). 3. Knowledge of the value and quality of Cloth, and the practical duties of a Tailor.		
[M.] ASSISTANT CLERKS OF WORKS - -	20 and 30.	
1. Handwriting and Orthography. 2. Arithmetic (including Vulgar and Decimal Fractions). 3. Theory of Construction. 4. Knowledge of Materials. 5. Designs and Specifications. 6. Measuring, estimating, and valuing works. 7. Drawing in detail.		
III. [M.] ASSISTANT CLERKS - - - -	18 and 25.	
1. Handwriting and Orthography. 2. Arithmetic (including Vulgar and Decimal Fractions). 3. Book-keeping.		
IV. [M.] OFFICE KEEPERS - - - -	30 and 45.	
1. Handwriting and Orthography. 2. Arithmetic (elementary).		

Department, and Qualifications required.	Limits of Age.	Fee for Examination.
METROPOLITAN POLICE (RECEIVER'S OFFICE)—*continued.*		
V. [W.] Inspectors of Coals, &c., and Soap, &c. - 1. Handwriting and Orthography. 2. Arithmetic (elementary). 3. Quality and value of the several articles which they have respectively to examine. The knowledge on these subjects to be thorough. 4. Composition of Reports stating results of Inspections.	30 and 45.	

MILITARY ENTRANCE EXAMINATIONS.

I. [O. C.] Examinations for Admission to the Royal Military Academy, Woolwich.

The Regulations are under revision; when settled they may be obtained on application.

II. [O. C.] Examinations for Admission to the Royal Military College, Sandhurst.

The Regulations are under revision; when settled they may be obtained on application.

III. [M.] Examinations of Lieutenants of Militia nominated for Commissions in the Army.

Subalterns of Militia who have previously passed a qualifying Examination in the subjects for the Royal Military College, Sandhurst, compete among themselves in military subjects for Commissions in the Army.

IV. [L. C.] Examinations for Entrance to the Royal Malta Fencible Artillery.

The subjects, &c. are as follows:

Subjects.	Marks.		
	Maximum.	Minimum allowed to Count.	Required for Qualification.
*English - - -	4,800	800	800
†Mathematics - -	3,600	600	200
French - - -	1,200	200	—
Italian - - -	1,200	200	—
General history (modern)	1,200	200	—
Geography - - -	1,200	200	—
‡Fortification (permanent)	1,200	200	—
Experimental sciences -	1,200	200	—
§Drawing - - -	600	100	—

Of the above subjects English and Arithmetic alone must necessarily be taken up. The rest are voluntary.

* Eight hundred marks in English must be obtained.

† Two hundred marks in arithmetic must be obtained.

‡ Fortification will be confined to Vauban's system, with attack and defence of the same.

§ Drawing will be confined to freehand copying from examples.

An aggregate total of 1,800 on all the subjects taken up will be necessary for qualification.

Department, and Qualifications required.	Limits of Age.	Fee for Examination.
MILITARY PRISONS DEPARTMENT.		
[M.] SCHOOLMASTER WARDERS, WARDERS, AND ASSISTANT WARDERS IN THE DEPARTMENT OF THE INSPECTOR GENERAL OF MILITARY PRISONS. 1. Reading. 2. Writing. 3. Arithmetic (simple Addition and Subtraction).	25 and 45. For Assistant Warder at Barbadoes 25 to 48.	
I. [M.] NIGHT WATCHMEN AND OTHER SUBORDINATE PRISON OFFICERS IN THE DEPARTMENT OF THE INSPECTOR GENERAL OF MILITARY PRISONS (INCLUDING COOKS, GATEKEEPERS, AND MESSENGERS). 1. Reading and writing simple words.	25 and 45.	
MINES, INSPECTORS OF.		
I. [M.] INSPECTORS OF COAL MINES. 1. Handwriting. 2. Orthography. 3. Arithmetic, including Vulgar and Decimal Fractions. 4. English Composition. 5. Theoretical and practical acquaintance with Coal Mines and Mining. 6. A knowledge of Metalliferous Mines. No person will be qualified as a candidate who has not, within five years previous to his application, been employed for two years underground in a coal mine.	28 and 35.	
MINT.		
I. [O. C.] LOWER DIVISION CLERKS.	16 and 20.	
II. [M. Cl. vii.] ASSISTANT ASSAYERS (appointments made under Clause VII. of the Order in Council).	16 and 30.	
III. [SCH. A.] RESIDENT ENGRAVERS. (Scheme not yet arranged.)		
IV. [M.] FOREMEN OF PRESS ROOM, FOREMEN OF DIE DEPARTMENT. 1. Handwriting and Orthography. 2. Arithmetic (including Vulgar and Decimal Fractions). 3. English Composition.	25 and 45.	
V. [M.] BALANCE MECHANICIANS. (Appointments have been made under Clause VII. of the Order in Council of 4th June 1870.)	25 and 50.	
VI. [M.] ARTIFICERS, OFFICE-KEEPERS - - -	17 and 40.	
[M.] CHEMISTS' ATTENDANTS, WORKMEN IN THE MELTING DEPARTMENT, ASSISTANT FIREMEN IN THE ASSAY DEPARTMENT.	17 and 35.	
[M.] PACKERS, TELLERS - - -	17 and 35. With an extension to 40 if they have served for six months in each year from a time when they were under 35.	
[M.] MESSENGERS - - - - -	17 and 35.*	
[M.] VISITORS' MESSENGERS - - - - - 1. Reading. 2. Writing. 3. Arithmetic (elementary).	17 and 40.*	

* With an extension to 46 in the case of pensioners from the army or navy.

Department, and Qualifications required.	Limits of Age.	Fee for Examination.
MINT—*cont.*		
VII. [M.] Boys 1. Reading. 2. Writing from Dictation. 3. Arithmetic (elementary).	10 and 16.	
VIII. [M. Cl. vii.] Assayers (Sydney and Melbourne). (To be appointed without examination under Clause VII. of the Order in Council of 4 June 1870, the qualifications being wholly professional.)	21 and 45.	
IX. [M. Cl. vii.] Junior Clerks (Sydney and Melbourne). (Appointments to be made under Clause VII. of the Order in Council of 4 June 1870 after open competition in the colonies, the examination to be conducted by the authorities of the respective Universities.)	16 and 20.	
X. [M.] Assistant Clerk and Storekeeper (Sydney)	17 and 35.	
[M.] Foremen (Sydney and Melbourne)	25 and 45.	
1. Handwriting. 2. Orthography. 3. Elementary Arithmetic.		
XI. [M. Cl. vii.] Weighers and Balance Mechanicians (Sydney).		
[M. Cl. vii.] Balance Mechanicians (Melbourne). (To be appointed without examination under Clause VII. of the Order in Council of 4 June 1870, the qualifications being wholly professional.)	25 and 50.	
XII. [M.] Messengers and Office Keepers (Sydney and Melbourne).	25 and 40.	
[M.] Housekeeper (Sydney)	25 and 40.	
[M.] Gauger (Melbourne)	25 and 40.	
[M.] Messenger (Melbourne)	25 and 40.	
[M.] Artificers (Sydney)	17 and 40.	
[M.] Workmen (Sydney)	17 and 35.	
[M.] Boys (Sydney) 1. Handwriting. 2. Orthography. 3. Elementary Arithmetic.	10 and 16.	
NATIONAL DEBT OFFICE.		
I. [SCH. A.] Clerks. (Appointments before the Order in Council of 12 Feb. 1876 were made under Scheme for Class II.)		
II. [M.] Messengers 1. Reading. 2. Writing. 3. Arithmetic (elementary).	25 and 40.	

Department, and Qualifications required.	Limits of Age.	Fee for Examination.
NATIONAL EDUCATION OFFICE (IRELAND).		
I. [L. C.] INSPECTORS OF SCHOOLS	**23 and 34.** Except in the case of National Teachers eligible to compete, who are admissible up to 39 years of age.	
1. English—	Marks.	Marks.
Penmanship, Orthography, English Composition, Grammar and Language — obligatory	200, 200, 300, 300	
English Literature (optional)	500	
		1,500
Literature to consist of Bacon's Essays; some of Edmund Burke's Works—American Taxation, Conciliation with America, and Address to the Electors of Bristol; Macaulay—*Essays on Clive and Hastings; Shakespeare—Hamlet and As You Like It; Milton—Sonnets, L'Allegro, Il Penseroso, Comus, and Books I. and II. of Paradise Lost.		
* The Essays and Plays may be changed from year to year.		
2. Geography (obligatory)—		
Sullivan's "Geography Generalized"		500
3. History (optional)—		
English, Greece (Smith's), Rome (Liddell's)		600
4. Elementary Mathematics (obligatory)—		
Arithmetic	600	
Euclid, 1st, 2nd, 3rd, and 6th Books	400	
Algebra, including Quadratic Equations	400	
Trigonometry, to solution of Plane Triangles only	300	
		1,700
Higher Mathematics (optional)—		
Spherical Trigonometry, Theory of Equations, Elements of Differential and Integral Calculus		600
5. Physical Science (obligatory)—		
Mechanics, with any two of the following subjects — Hydrostatics, Pneumatics, Optics, Heat, Electricity		600
6. Logic (optional)—		
Walker, omitting chapters on Induction and Fallacies; and Whately's Easy Lessons on Reasoning		300
7. Political Economy (optional)—		
Adam Smith's Wealth of Nations, Books I., II., III., and V., with either of the following:—J. S. Mill, Books I., II., III., and V.; or Fawcett's Manual, Book I.; Book II., Chapters 3, 4, 5; Book III., Chapters 1, 2, 5, 6, and 8		300
8. (1.)* Latin—		
Livy, Books I., II., and III.; Sallust; Virgil, Books I., II., and III. of Æneid; Horace, The Odes (not to include their metrical construction)		500
Latin Prose Composition is optional.		

Department, and Qualifications required.	Limits of Age.	Fee for Examination.
NATIONAL EDUCATION OFFICE (IRELAND)—*continued.*		
INSPECTORS OF SCHOOLS—*cont.*		
(2.)* Greek— Xenophon, Book I. of Anabasis or Cyropædia; two Books of the Iliad, and a Book of Herodotus - - - - - 500		
(3.)* French— Translation, Composition, Oral Questions - 500		
* A candidate *may* take these three languages, but *must* take at least two of them.		
Latin and Greek: An extended course (optional) 600		
(4.) German (optional) - - - 500		
(5.) Italian (optional) - - - 500		
9. Education (obligatory)— Tracts of Ascham, Milton, and Locke; Joyce's Handbook of School Management; Robinson's Manual of Method and Organisation - - - - - 400		
II. [L.C.] INSPECTORS' ASSISTANTS - - -	23 and 30.	
1. Penmanship.		
2. Orthography.		
3. English Composition.		
4. Grammar.		
5. Literature as contained in the Commissioners' lesson books.		
6. Geography— Sullivan's Geography generalized, including chapters on History.		
7. Elementary Mathematics— Arithmetic, Euclid, 1st, 2nd, 3rd, and 6th Books; Algebra, including Quadratic Equations; Trigonometry, to Solution of Plane Triangles.		
8. Physical Science— Mechanics, with any two of the following subjects, Hydrostatics, Pneumatics, Optics, Heat, Electricity.		
9. Easy lessons on Reasoning.		
10. Easy lessons on Money Matters.		
11. Joyce's Handbook on School Management.		
III. [O. C.] LOWER DIVISION CLERKS.		
IV. [M.] HOUSEKEEPERS, MATRONS - - -	20 and 40.	
1. Reading.		
2. Writing (including a moderate proficiency in Spelling).		
3. Arithmetic (elementary).		
V. [M.] ASSISTANT MESSENGERS - - -	20 and 35. With extension to 40 in the case of persons who have served in the Department continuously from a time at which they were under 35 years of age.	
1. Reading.		
2. Writing.		
3. Arithmetic (elementary).		
NATIONAL GALLERY.		
I. [M.] ATTENDANTS OR CURATORS, PORTERS, AND ASSISTANTS.	21 and 40.	
1. Reading.		
2. Writing.		
II. [M.] MESSENGERS - - - - -	21 and 40.	
1. Reading.		
2. Writing.		
3. Arithmetic (elementary).		
III. [M.] FEMALE SERVANTS - - - -	20 and 40.	
[No literary examination.]		

Department, and Qualifications required.	Limits of Age.	Fee for Examination.
NATIONAL GALLERY (IRELAND).		
[M.] PORTERS 1. Reading. 2. Writing. 3. Arithmetic (Addition and Subtraction, simple and compound).	21 and 40.	
NATIONAL GALLERY (SCOTLAND).		
I. [M.] DOORKEEPERS 1. Reading. 2. Writing. 3. Arithmetic (sufficient for the keeping of a petty cash book).	21 and 40.	
II. [M.] OUT-DOOR PORTERS 1. Reading. 2. Writing.	21 and 40.	
NATIONAL PORTRAIT GALLERY.		
[M.] PORTERS 1. Writing from Dictation. 2. Arithmetic (elementary).	20 and 35. With an extension of five years in the case of persons previously employed in the Public Service.	
PARLIAMENTARY COUNSEL (OFFICE OF).		
I. [M.] CLERKS (*a*) 1. Reading. 2. Writing. 3. Arithmetic (elementary).	18 and 30.	
II. [M.] MESSENGERS 1. Handwriting and Orthography. 2. Arithmetic (elementary).	14 and 18.	
PATENT OFFICE.		
I. [SCH. A.] CLERK TO THE COMMISSIONERS OF THE PATENTS, SUPERINTENDENTS OF THE PATENT OFFICE MUSEUM, REGISTRARS OF DESIGNS AND REGISTRARS OF TRADE MARKS.† Appointments have been made under Cl. VII. of the Order in Council of the 4th June 1870.		
II. [SCH. A.] CLERKS. (Scheme for Class I.)		
III. [SCH. A.] ASSISTANTS TO CURATOR.—(Scheme not yet arranged.)		
IV. [SCH. A.] INDEXING AND ABRIDGING CLERKS *Preliminary Examination.* 1. Handwriting. 2. Orthography. 3. Arithmetic (to Vulgar and Decimal Fractions). 4. English Composition. *Competitive Examination.* 1. Précis. 2. Geometry (elementary and practical). 3. Mechanical Drawing. 4. Mechanics and Mechanism. 5. Chemistry. 6. Electricity and Magnetism. 7. Hydrostatics, Hydraulics, and Pneumatics. Candidates must pass to the satisfaction of the Civil Service Commissioners in one of the subjects numbered 4 and 5 according to the nature of the situation vacant, *i.e.*, according as the duties to be performed render a	21 and 25. *See* note * on p. 37.	1*l.*

(*a*) *See* note on p. 36.

† These rules are under revision.

Department, and Qualifications required.	Limits of Age.	Fee for Examination.
PATENT OFFICE—*continued.*		
INDEXING AND ABRIDGING CLERKS—*continued.* knowledge of Mechanics and Mechanism or of Chemistry absolutely necessary. The remaining subjects are optional.		
V. [O. C.] LOWER DIVISION CLERKS.		
VI. [SCH. A.] KEEPERS OF THE MANCHESTER OFFICE OF THE TRADE MARKS REGISTRY.* An Appointment has been made under Clause VII. of the Order in Council of the 4th June 1870.	30 and 50.	
VII. [M.] MESSENGERS, WAREHOUSEMEN, AND ATTENDANTS IN MUSEUM.* 1. Reading. 2. Writing from Dictation. 3. Arithmetic (the first four rules, simple).	18 and 40.	
VIII. [M.] PATTERN MAKERS, ASSISTANT MACHINISTS* - 1. Handwriting. 2. Orthography. 3. Arithmetic (elementary).	18 and 40.	
PAYMASTER-GENERAL'S OFFICE.		
I. [SCH. A.] CLERKS. (Scheme not yet arranged.)		
II. [O. C.] LOWER DIVISION CLERKS.		
III. [M.] OFFICE KEEPERS - - - - -	30 and 40.	
[M.] MESSENGERS - - - - -	20 and 35.	
1. Writing from Dictation. 2. Arithmetic (first four rules, and, in the case of Office-keepers, Proportion).	Persons are to be considered eligible who have passed the superior limit of age, provided they originally entered the Public Service at an age within the prescribed limits, and have since served continuously.	
PETTY BAG OFFICE.		
[M.] JUNIOR TEMPORARY CLERKS - - - 1. Handwriting and Orthography. 2. Arithmetic (elementary). 3. Reading. 4. Engrossing (not including German Text or Old English).	17 and 25.	
PETTY SESSIONS CLERKS, IRELAND (OFFICE OF REGISTRAR OF).		
[M.] CLERKS. 1. Handwriting and Orthography. 2. Arithmetic (including Vulgar and Decimal Fractions). 3. Book-keeping by Double Entry. 4. English Composition. 5. Geography.		
POST OFFICE.		
I. [SCH. A.] CLERKS (HIGHER DIVISION), LONDON. (Scheme for Class I.)		
II. [O. C.] MEN CLERKS (LOWER DIVISION). BOY CLERKS (LOWER DIVISION).		
III. [SCH. A.] PROFESSIONAL CLERK IN SOLICITOR'S OFFICE, DUBLIN. (Scheme as for Clerks in the Solicitor's Office, Treasury) (*see* Scheme II. p. 86.)		

* These rules are under revision.

Department, and Qualifications required.	Limits of Age.	Fee for Examination.
POST OFFICE—*continued.*		
IV. [O. C.] PAPER KEEPER IN SECRETARY'S OFFICE, LONDON, EDINBURGH, AND DUBLIN. 1. Exercises designed to test Handwriting. 2. Writing from Dictation. 3. Arithmetic (elementary).	17 to 20.	5*s.*
V. [L. C.] OFFICERS IN CHARGE OF MAILS TO INDIA - 1. Exercises in Handwriting and Orthography. 2. English Composition. 3. Arithmetic (elementary). 4. Geography. 5. French, Italian, and German conversation.	25 to 35.	
VI. [L. C.] FEMALE CLERKS (*Metropolitan Offices*) - 1. Handwriting and Orthography. 2. English Grammar and Composition. 3. Arithmetic (including Vulgar and Decimal Fractions). 4. Geography.	17 to 20.	
VII. [L. C.] RETURNERS OF LETTERS (Female Staff) IN METROPOLITAN OFFICES.	17 to 20.	
[L. C.] COUNTERWOMEN IN METROPOLITAN OFFICES 1. Exercises designed to test Handwriting. 2. Writing from Dictation. 3. Arithmetic (elementary).	20 to 30.	
VIII. [M.] POSTMASTERS (*Provincial*) whose whole time is occupied in the performance of official duties.	21 to 50.	
[M.] CLERKS (*Provincial*) - - - -	17 to 25.	
[M.] BOY CLERKS (*Provincial*) - - -	15 to 17.	
[M.] TELEGRAPH LEARNERS (*Metropolitan and Provincial*). 1. Writing from Dictation. 2. Handwriting. 3. Arithmetic (easy sums in the first four rules).	14 to 18. with extension to 24 in the case of skilled hands.	
IX. [M.] HOUSEKEEPER (*London*) - - -	25 to 45.	
[M.] MARINE MAIL GUARDS - - -	20 to 25.	
[M.] LETTER CARRIERS (*London*) - -	17 to 20.	
[M.] LETTER CARRIERS (*other than London*) -	17 to 30.	
[M.] BOYS, OTHER THAN BOY CLERKS -	14 to 17.	
[M.] PORTERS (*Metropolitan or Provincial*) -	20 to 30.	
[M.] LINEMEN AND MECHANICS (*Metropolitan or Provincial*). 1. Writing tolerably a few lines. 2. Reading manuscript. 3. Addition (simple and compound).	17 to 30. with extension to 35 in the case of skilled hands.	

NOTES.

The maximum limit of age is to be extended to 45 in the case of Country Letter Carrier, Porter, and Skilled Lineman or Mechanic, who may be in receipt of a pension whether civil, naval, or military.

Persons previously employed in the Public Service, or in that of any of the Telegraph Companies absorbed into the Post Office, will be eligible as to age for appointment to any situation other than Clerk in the Metropolitan Offices or Officer in charge of Mails to India, provided their age, when they were first employed, did not exceed the superior limit of age attached at that time to the situation to which they seek to be appointed, and provided also that such employment has been continuous.

GENERAL UNIVERSITY MICHIGAN

Department, and Qualifications required.	Limits of Age.	Fee for Examination.
PRISONS DEPARTMENT (ENGLAND).		
I. [M.] CLERKS, STEWARDS, AND STOREKEEPERS IN PRISONS. 1. Handwriting. 2. Orthography. 3. Arithmetic (including Vulgar and Decimal Fractions). 4. Copying MS. 5. English Composition. 6. Indexing and Docketing. 7. Book-keeping. 8. Digesting Returns into Summaries. Candidates must pass in the first three subjects, and in three at least of the remaining subjects.	20 and 30.	
II. [M.] SCHOOLMASTERS - - -

Department, and Qualifications required.	Limits of Age.	Fee for Examination.
PRISONS DEPARTMENT (ENGLAND)—*continued.*		
IV. [M.] Deputy Superintendents of Female Convict Prisons. 1. Writing and Orthography. 2. Reading. 3. Arithmetic (first four Rules, Simple and Compound, and the Arithmetical Tables). 4. Elementary Grammar.	25 and 40.*	
V. [M.] Lady Scripture Readers - - -	25 and 40.*	
[M.] Scripture Readers - - - - 1. Handwriting and Orthography. 2. Reading. 3. Religious Knowledge (the Bible). 4. Intelligence in communicating knowledge.	24 and 40.* Candidates who have been discharged from the Army to be eligible as scripture readers while under 45, provided their service commenced while they were under 40, and has been continuous.	
VI. [M.] Compounders - - - - -	24 and 40.*	
1. Reading. 2. Writing and Orthography. 3. Arithmetic (including the Arithmetical Tables, Reduction, Practice, and Vulgar and Decimal Fractions). Appointments may be made under clause VII. of the Order in Council of 4 June 1870 in the case of persons who have passed the major or the minor examination of the Pharmaceutical Society.		
VII. [M.] Farm Bailiffs - - - -	24 and 40.* Candidates who have been discharged from the Army to be eligible while under 45, provided their service commenced while they were under 40, and has been continuous.	
VIII. [M.] Engineers, Clerks of Works, and Foremen of Works. 1. Handwriting and Orthography. 2. Arithmetic (Elementary).	24 and 40.* Candidates who have been discharged from the Army to be eligible while under 45, provided their service commenced while they were under 40, and has been continuous. Persons who have been continuously employed as carpenters, &c., from a period at which they were under 40 years, may be eligible for engineer and foreman of works up to 50.	
IX. [M.] Stewards' Porters, Manufacturers' Porters. 1. Reading. 2. Writing. 3. Arithmetic sufficient for the keeping of a petty cash book.	24 and 42.*†	

* The maximum limit of age may be extended in favour of all persons who may have served continuously in a permanent capacity in the Prisons Department from a time when they were under the maximum limit.

† An exception to be made in favour of those who have served either in this or other Departments of the Public Service, such candidates to be eligible while under 45 years of age, provided their service commenced while they were under the superior limits and has been continuous.

Department, and Qualifications required.	Limits of Age.	Fee for Examination.
PRISONS DEPARTMENT (ENGLAND)—*continued.*		
X. [**M.**] ASSISTANT MESSENGERS - - - -	**14 and 20.**	
1. Reading. 2. Writing and Spelling. 3. Arithmetic (simple Addition and Subtraction).		
XI. [**M.**] MATRONS AND ASSISTANT MATRONS - -	**28 and 40.***	
[**M.**] SUBORDINATE OFFICERS IN PRISONS, DIVISION I.	**24 and 42.†**	
(Instructing Warders, Assistant Warders, Infirmary Nurses, Trades Warders, Messengers in Directors' Office and in Prisons, Artisans, Locomotive Engineers and Fitters, Boiler Makers, Engine Drivers, Foremen of Platelayers, Gasmen.) 1. Reading. 2. Writing. 3. Arithmetic (simple Addition and Subtraction).		
XII. [**M.**] SUBORDINATE OFFICERS IN PRISONS, DIVISION II.	**24 and 42.†**	
(Civil Guards, Night-Watchmen, Stokers, Labourers, Assistant Mechanics, Dairywomen, and Assistant Gasmen.) 1. Reading. 2. Writing.		
XIII. [**M.**] WATER POLICE CONSTABLES (Western Australia). 1. Reading. 2. Writing.	**24 and 40.‡**	
PRISONS (ENGLAND), SURVEYOR-GENERAL'S OFFICE.		
I. [**SCH. A.**] CLERK AND DRAUGHTSMAN - -	**21 and 35.**	10*s.*
Part I.—Preliminary.	*See* note *, p. 37.	
1. Handwriting. 2. Orthography. 3. Arithmetic (to Vulgar and Decimal Fractions).		
Part II.—Competitive.		1*l.*
1. Theory of Construction (Engineering and Architectural). 2. Knowledge of Materials (Engineering and Architectural). 3. Designs and Specifications (Engineering and Architectural). 4. Estimating and Valuing (Engineering and Architectural). 5. Drawing (Engineering and Architectural).		

* The maximum limit of age may be extended in favour of all persons who may have served continuously in a permanent capacity in the Prisons Department from a time when they were under the maximum limit.

† An exception to be made in favour of those who have served either in this or other Departments of the Public Service, such candidates to be eligible while under 45 years of age, provided their service commenced while they were under the superior limits and has been continuous.

‡ The limits to be extended in the case of persons who have been continuously employed in any of the Government prisons.

Department, and Qualifications required.	Limits of Age.	Fee for Examination.
PRISONS DEPARTMENT (ENGLAND)—*continued.* Candidates will be required to show what preliminary training or technical education they have undergone to qualify themselves for a situation of this nature, and they must produce evidence on this point as well as of their industry and steadiness, before they can be admitted to the examination. If this evidence should be *primâ facie* satisfactory, applicants will be allowed to compete, but further proof will, if necessary, be required from the successful candidates.		
PRISONS BOARD (IRELAND).		
I. [O C.] Office of the Directors.—Lower Division Clerks.		
II. Clerks in Prisons. (Scheme not yet arranged.)		
III. [M.] Office Keeper (Directors' Office) -	23 and 42.*†	
[M.] Messengers in the Office of the Directors 1. Reading. 2. Writing. 3. Arithmetic sufficient for the keeping of a petty cash book.	20 and 35.*†	
IV. [M.] Assistant Schoolmasters and Assistant School-mistresses. 1. Arithmetic (including Vulgar and Decimal Fractions). 2. English Grammar. 3. Geography. 4. History. 5. School Management.	24 and 42.*†	
V. [M.] Clerks in the Convict Prisons - - 1. Writing from Dictation. 2. Arithmetic (including the Rule of Three, Practice, and the Arithmetical Tables).	18 and 40.*†	
VI. [M.] Stewards and Accounting Clerks - - 1. Handwriting and Orthography. 2. Arithmetic (including Vulgar and Decimal Fractions). 3. Book-keeping (elementary).	25 and 42.*†	
VII. [M.] Stewards' Clerks - - - - 1. Reading. 2. Handwriting and Orthography. 3. Arithmetic (including Vulgar and Decimal Fractions).	18 and 40.*†	
VIII. [M.] Subordinate Officers (Male), Hatchmen, Warders, Messengers, Night Watchmen, Trades' Warders, and Temporary Trades' Warders.	20 and 42.*†‡	
[M.] Subordinate Officers (Female), Assistant Matrons and Hospital Nurses. 1. Reading. 2. Writing. 3. Arithmetic (simple Addition and Subtraction).	20 and 40.*†	

* Any candidate presenting himself within one month after attaining the prescribed age will be eligible for examination.

† The maximum limit of age may be extended in favour of a person already in the Convict Service, and any person employed in a prison under the control of the Lord Lieutenant may be transferred to another such prison at any age, provided in each case that he has served in an established capacity from a time at which he was within the ordinary limits.

‡ With extension to 45 in favour of persons who have served in the Army or Navy.

Department, and Qualifications required.	Limits of Age.	Fee for Examination.
PRISON DEPARTMENT (SCOTLAND).		
I. [O. C.] Lower Division Clerks.		
[M.] Draughtsmen - - - - -	**20 and 45.**	
1. Handwriting and orthography. 2. Arithmetic (to Vulgar Fractions). 3. Elementary and Constructive Architectural Drawing. 4. Elementary Knowledge of Building Construction.		
II. [M.] Clerks in Prisons - - - -	**18 and 40.**	
1. Writing from Dictation. 2. Arithmetic (including the Rule of Three and Practice, and the Arithmetical Tables).		
III. [M.] Stewards in Prisons.	**25 and 40.**	
1. Handwriting and Orthography. 2. Arithmetic (including Vulgar Fractions). 3. Bookkeeping (elementary).		
IV. [M.] Female Teachers - - - -	**22 and 40.**	
1. Handwriting and Orthography. 2. Reading. 3. Arithmetic (including Rule of Three and Practice). 4. Elementary Grammar. 5. Religious Knowledge (the Bible). 6. School Management. 7. Geography (elementary). Certificated Teachers may be appointed without examination under Clause VII. of the Order in Council of 4th June 1870.		
V. [M.] Male Teachers - - - - -	**20 and 40.**	
1. Handwriting and Orthography. 2. Reading. 3. Arithmetic (including Vulgar and Decimal Fractions). 4. Grammar and English Language. 5. Religious Knowledge (the Bible). 6. School Management. 7. Two, at least, of the following, at the option of the Candidate :—(*a.*) English History; (*b.*) Geography; (*c.*) Elements of Geometry, or of some branch of Mathematics; (*d.*) Latin. Certificated Teachers may be appointed without examination under Clause VII. of the Order in Council of 4th June 1870.		
VI. [M.] Scripture Readers - - - -	**25 and 40.**	
1. Handwriting and Orthography. 2. Reading. 3. Religious Knowledge (the Bible). 4. Intelligence in communicating Knowledge.		
VII. [M.] Female Warders - - - -	**22 and 36.**	
1. Handwriting and Orthography. 2. Arithmetic (simple Addition and Subtraction).		

Department, and Qualifications required.	Limits of Age.	Fee for Examination.
PRISONS BOARD (SCOTLAND)—*continued.*		
VIII. [M.] MALE WARDERS, AND SUPERINTENDENTS OF LUNATIC DEPARTMENTS.	22 and 40. May be extended to 45 in the case of one who, while under 40 years of age, entered and continued in service in the Army, or as an hospital attendant, or a prison officer.	
[M.] MESSENGERS IN COMMISSIONERS' OFFICE 1. Reading. 2. Writing and Spelling. 3. Arithmetic (sufficient for the keeping of a petty cash book).	17 and 30.	
IX. [M.] STEWARDS' PORTERS, MANUFACTURERS' PORTERS, AND MESSENGERS IN PRISONS. 1. Reading. 2. Writing. 3. Arithmetic (sufficient for the keeping of a petty cash book).	22 and 40. May be extended in favour of all persons who have served continuously in a permanent capacity in the prison service from a time when they were under the maximum limit.	
PRIVY COUNCIL OFFICE.		
I. [SCH. A.] CLERKS. (Scheme not yet arranged.)		
II. [SCH. A.] CHIEF CLERKS IN THE JUDICIAL DEPARTMENT. An Appointment has been made under Clause VII. of the Order in Council of the 4th June 1870.		
III. [M.] THIRD CLERKS (TEMPORARY) IN THE JUDICIAL DEPARTMENT. 1. Handwriting and Orthography. 2. Reading aloud. 3. Arithmetic (enough for ordinary accounts). 4. The elements of Legal Practice. 5. French (translation into English). 6. Shorthand. Candidates should either be students of one of the Inns of Court, or have been in an attorney's office, or in some other public office.	23 and 30.	
IV. [O. C.] LOWER DIVISION CLERKS.		
V. [M.] COUNCIL CHAMBER KEEPERS, MESSENGERS, AND OFFICE PORTERS, AND DOOR PORTERS. 1. Reading. 2. Writing. 3. Arithmetic (elementary).	21 and 40.	
PRIVY SEAL OFFICE.		
[M.] MESSENGERS 1. Reading. 2. Writing. 3. Arithmetic (elementary).	21 and 41.	
PUBLIC WORKS LOAN OFFICE.		
I. [O. C.] LOWER DIVISION CLERKS.		
II. [M.] MESSENGERS AND PORTERS 1. Reading. 2. Writing. 3. Arithmetic (first four rules).	24 and 40.	

Department, and Qualifications required.	Limits of Age.	Fee for Examination.
PUBLIC WORKS OFFICE (IRELAND).		
I. [SCH. A.] ASSISTANT COMMISSIONERS - - An appointment has been made under Clause VII. of the Order in Council of 4th June 1870.		
II. [SCH. A.] ASSISTANT ENGINEERS - - - 1. Handwriting. 2. Orthography. 3. English Composition. 4. Arithmetic (including Vulgar and Decimal Fractions). 5. Algebra to Quadratic Equations. 6. Geometry. 7. Plane Trigonometry. 8. Hydrostatics, Hydrodynamics, and Hydraulics. 9. Levelling and Surveying, including the adjustment of the instruments and the plotting the Surveys and Sections. 10. Drawing, including the preparation of working drawings in detail. 11. Taking out quantities, and preparing estimates and specifications from drawings. 12. The various machines used in Engineering works, and the working of them. 13. Knowledge of the qualities, uses, modes of testing, and strength of Materials. 14. Engineering works, including the construction of roads, railways, canals, harbours, docks, piers, and breakwaters; drainage of marsh lands, reclamation from the sea, and drainage and water supply of towns. Candidates failing in any of the above subjects will not be eligible. Candidates will be required to show what preliminary training they have undergone to qualify them for the situation, and that they have been employed for at least five years in the capacity of Engineer or of resident Engineer on works of magnitude.	26 and 35. *See* note * on p. 37.	3*l.*
III. [SCH. A.] CLERKS OF WORKS - - - 1. Handwriting. 2. Orthography. 3. English Composition. 4. Arithmetic (to Vulgar and Decimal Fractions). 5. Geometrical Drawing. 6. Freehand Sketching in outline. 7. Knowledge of Materials. 8. Designing simple Buildings, with Specification and Estimate, and working drawings of details of Carpenters' and Masons' Work. 9. Taking out quantities from plans, measuring and valuing buildings. 10. Surveying, and levelling, and valuing lands. Candidates failing in any of the above subjects will not be eligible. Candidates must have been employed for at least five years in the superintendence of buildings, and will be required to produce satisfactory proof of their efficiency and practical knowledge.	25 and 30. *See* note * on p. 37.	2*l.*

Department, and Qualifications required.	Limits of Age.	Fee for Examination.
PUBLIC WORKS OFFICE (IRELAND)—*continued.*		
IV. [O. C.] LOWER DIVISION CLERKS.		
V. [SCH. A.] FURNITURE CLERKS - - -	25 and 35. See note * on p. 37.	10*s.*
Part I.—Preliminary.		
1. Handwriting. 2. Orthography. 3. Arithmetic (to Vulgar and Decimal Fractions).		
Part II.—Competitive.		1*l.*
1. Knowledge of furniture, fittings, &c. (Candidates must be competent practically to superintend the supply and repairs of all articles of furniture and fittings, &c. which may possibly be required in public buildings and royal palaces.) 2. Estimating. (They must be able to frame estimates of the probable cost of such supply and repairs.) 3. Drawing. (They must be competent to prepare working drawings and sketches showing the design and construction of all articles of furniture, of book-cases, presses, cupboards, and other fittings.) The competition will be decided partly by the number of marks given for answers, written or oral, to questions on the above-mentioned subjects, and partly by such testimony as the Commissioners may obtain from persons of practical experience as to the relative fitness of the candidates. Candidates will be required to show what preliminary training or technical education they have undergone to qualify themselves for a situation of this nature, and they must satisfy the Civil Service Commissioners that they possess the special qualifications for the office.		
VI. [SCH. A.] CLERKS IN THE DEPARTMENT OF THE SOLICITOR.	18 and 30. See note * on p. 37.	10*s.*
Obligatory Subjects.		
1. Handwriting. 2. Orthography. 3. Arithmetic (including Vulgar & Decimal Fractions). 4. English Composition. 5. Criminal Law, and Proceedings before Justices of the Peace. 6. Law of Evidence. 7. Common Law Procedure and Practice. 8. Elements of Conveyancing. The examination in the subjects numbered 5, 6, 7, and 8 will be of an elementary character.		
Optional Subjects.		
9. Geography. 10. English History. 11. Latin. 12. French or German.		

Department, and Qualifications required.	Limits of Age.	Fee for Examination.
PUBLIC WORKS OFFICE (IRELAND)—*continued.*		
13. Mercantile Book-keeping. 14. Equity and Practice of the Courts. 15. Bankruptcy and Practice of the Courts. Candidates will be required to show what preliminary training or technical education they have undergone to qualify themselves for a situation of this nature. No candidate will be eligible who is not serving, or has not within two years been serving, as a clerk (not articled) in a solicitor's office.		
VII. [SCH. A.] ESTIMATING CLERKS IN THE ARCHITECT'S BRANCH. 1. Handwriting. 2. Orthography. 3. Arithmetic (to Vulgar and Decimal Fractions). 4. The requisite technical knowledge, including an acquaintance with the terms and processes of building, such as to enable the candidate to prepare and examine building accounts. Candidates failing in any of the above-named subjects will not be eligible. Candidates will be required to show what preliminary training or technical education they have undergone to qualify themselves for a situation of this nature, and they must satisfy the Civil Service Commissioners on this point before they can be admitted to the Examination.	22 and 30. *See* note * on p. 37.	1*l.*
VIII. [SCH. A.] EXAMINING CLERKS IN THE ARCHITECT'S BRANCH. (Appointments before the Order in Council of 12 Feb. 1876 were made under Scheme for Class II.) The knowledge of the technical duties upon which persons appointed are to be employed must be acquired in the Architect's Office, and the appointments must be held subject to a certificate of efficiency at the end of six months.		
IX. [SCH. A.] SUPERINTENDENTS OF WORKS AT KINGSTOWN HARBOUR. (An appointment has been made under Clause VII. of the Order in Council of 4th June 1870.)		
X. [M.] BAILIFFS IN PHŒNIX PARK - - - 1. Reading. 2. Writing. 3. Arithmetic.	25 and 50.	
XI. [SCH. A.] OVERSEERS OF VICE-REGAL RESIDENCES (An appointment has been made under Clause VII. of the Order in Council of 4th June 1870.)	27 and 50.	
XII. [M.] HOUSEKEEPERS AND HOUSEKEEPER TO CUSTOMS AND INLAND REVENUE BUILDINGS AT WATERFORD. 1. Reading. 2. Writing. 3. Arithmetic (sufficient for the keeping of a petty cash book).	30 and 45.	

Department, and Qualifications required.	Limits of Age.	Fee for Examination.
PUBLIC WORKS OFFICE (IRELAND)—*continued.*		
XIII. [M.] TIME-KEEPERS, STOREKEEPERS, CLERKS AND CATTLE ACCOUNT KEEPERS, PHŒNIX PARK. 1. Reading. 2. Writing. 3. Arithmetic (first four rules).	25 and 40. Except in the case of persons who have served in the Royal Irish Constabulary, or in H.M. Regular Forces, or as warders or hatchmen in Government prisons from a time at which they were within the ordinary limits.	
XIV. [M.] NIGHT WATCHMEN (KINGSTOWN HARBOUR) - [M.] PARK CONSTABLES AND GATEKEEPERS, PHŒNIX PARK. 1. Reading. 2. Writing.	21 and 50. 25 and 40. Except in the case of persons who have served in the Royal Irish Constabulary, or in H.M. Regular Forces, or as warders or hatchmen in Government prisons from a time at which they were within the ordinary limits.	
XV. [M.] HOUSEKEEPERS (AIDES-DE-CAMP QUARTERS, DUBLIN CASTLE). (Under consideration.)		
XVI. [M.] MEN MESSENGERS AND HALL PORTERS - 1. Reading. 2. Writing (including a moderate proficiency in spelling). 3. Elementary Arithmetic.	18 and 30.	
XVII. [M.] JUNIOR OR BOY MESSENGERS - - 1. Writing from Dictation, including spelling of easy words. 2. Elementary Arithmetic.	15 and 18.	
QUEEN'S AND LORD TREASURER'S REMEMBRANCER'S OFFICE (SCOTLAND).		
I. [O. C.] LOWER DIVISION CLERKS.		
II. [M.] HOUSEKEEPERS - - - - -	21 and 35. With extension to 40 for candidates who have been continuously in the public service from a time when under 35.	
[M.] SUPERINTENDENTS OF THE COURT HOUSE BUILDINGS, EDINBURGH. 1. Handwriting and Orthography. 2. Arithmetic (elementary).	21 and 45.	
III. [M.] DOORKEEPERS - - - - - -	21 and 35.	
QUEEN'S COLLEGES (IRELAND).		
[M.] PORTERS - - - - - -

Department, and Qualifications required.	Limits of Age.	Fee for Examination.
QUEEN'S REMEMBRANCER'S OFFICE.		
I. [M.] CLERKS (*a*) - - - - -	17 and 25.	
1. Handwriting and Orthography.		
2. Transcribing.		
3. Comparison of Copies with Originals.		
4. Arithmetic (elementary).		
II. [M.] MESSENGERS - - - - -	21 and 35.	
1. Reading.		
2. Writing from Dictation.		
3. Arithmetic (elementary).		
III. [M.] HOUSEKEEPERS - - - -	25 and 45.	
1. Reading.		
2. Writing.		
3. Arithmetic (elementary).		
QUEEN'S UNIVERSITY (IRELAND).		
[M.] ASSISTANT CLERKS IN SECRETARY'S OFFICE (*a*) -	18 and 25.	
1. Writing from Dictation.		
2. Arithmetic (including Vulgar and Decimal Fractions).		
3. Correspondence.		
4. Précis.		
5. Geography of the British Isles.		
RAILWAYS COMMISSION.		
I. [M. Cl. vii.] REGISTRARS. (To be certificated under Clause VII. of the Order in Council of 4th June 1870.)		
II. [M.] CLERK (*a*) - - - - -	18 and 40.	
1. Handwriting and Orthography.		
2. Elementary arithmetic.		
3. English Composition.		
RECORD OFFICE (ENGLAND).		
I. [SCH. A.] CLERKS. (Scheme for Class I.)		
Candidates successful in the competition must pass also a satisfactory examination in Translation from the Latin and French languages.		
II. [M.] WORKMEN AND BOYS - - - -	16 and 35.	
1. Reading.		
2. Writing.		
3. Arithmetic (elementary).		
III. [M.] CHARWOMEN - - - - -	25 and 40.	
(No Literary Examination.)		

(*a*) *See* note on p. 36.

Department, and Qualifications required.	Limits of Age.	Fee for Examination.
RECORD OFFICE (IRELAND).		
I. [SCH. A.] CLERKS. (Scheme for Class I.) Candidates successful in the competition must pass also a satisfactory examination in Translation from the Latin and French Languages.		
II. [M.] MESSENGERS - - - - - 1. Writing from Dictation. 2. Arithmetic (elementary).	20 and 45.*	
III. [M.] WORKMEN - - - - 1. Reading. 2. Writing and Orthography. 3. Arithmetic (elementary).	18 and 25.*	
REFORMATORIES, OFFICE OF INSPECTOR OF.		
I. [SCH. A.] CHIEF CLERKS. (Scheme not yet arranged.)		
II. [O. C.] LOWER DIVISION CLERKS.		
REFORMATORIES, OFFICE OF INSPECTOR OF (IRELAND).		
[SCH. A.] CLERKS. (Appointments before the Order in Council of 12 Feb. 1876 were made under Scheme for Class II.)		
REGISTRAR GENERAL'S OFFICE (ENGLAND).		
I. [O. C.] LOWER DIVISION CLERKS.		
II. [SCH. A.] INDEX COMPILERS AND STATISTICAL ABSTRACTORS. 1. Handwriting. 2. Orthography. 3. Arithmetic (including Vulgar and Decimal Fractions). 4. English Composition. Candidates failing in any of the above-named subjects will not be eligible.	18 and 21.	10s
III. [M.] OFFICE KEEPERS - - - -	25 and 35.	
[M.] MESSENGERS - - - - - 1. Handwriting and Orthography. 2. Arithmetic (elementary).	21 and 35.	
IV. [M.] ASSISTANT PORTERS - - - - 1. Reading MS. 2. Writing. 3. Spelling. 4. Arithmetic (first four rules).	13 and 17.	

* Any candidate presenting himself within one month after attaining the prescribed age will be eligible for examination.

Department, and Qualifications required.	Limits of Age.	Fee for Examination.
REGISTRAR GENERAL'S OFFICE, IRELAND (INCLUDING THE AGRICULTURAL STATISTICS OFFICE).		
I. [O. C.] Lower Division Clerks.		
II. [SCH. A.] Indexers, Transcribers, and Task-workers. (Scheme not yet arranged.)		
III. [M.] Office Keeper 1. Handwriting and Orthography. 2. Elementary Arithmetic.	25 and 35.	
IV. [M.] Messengers [M.] Temporary Messengers 1. Writing from Dictation. 2. Arithmetic (elementary).	20 and 35.* 17 and 35.*	
REGISTRAR GENERAL'S OFFICE (SCOTLAND).		
I. [SCH. A.] Clerks. (Scheme not yet arranged.)		
II. [O. C.] Boy Clerks of the Lower Division.		
ROYAL HIBERNIAN MILITARY SCHOOL. (Nothing fixed.)		
ROYAL IRISH ACADEMY.		
[L.C.] Clerks A. *Obligatory.* 1. Handwriting and Orthography. 2. Arithmetic (including Vulgar and Decimal Fractions). 3. English Composition. 4. Précis. 5. Latin (translation). 6. French (translation). B. *Optional.* 7. German (translation). 8. Irish (translation). 9. Book-keeping.	18 and 35.	
ROYAL MILITARY ASYLUM, CHELSEA.		
I. [M.] Staff Sergeants 1. Reading. 2. Writing from dictation. 3. Arithmetic (to Rule of Three).	30 and 45.	
II. [M.] Sergeants and Corporals [M.] Sergeant and Gymnastic Instructor 1. Reading. 2. Writing from dictation. 3. Elementary Arithmetic.	30 and 45. 24 and 40.	
III. [M.] Pioneers and Nurses 1. Reading. 2. Writing (including moderate proficiency in spelling).	Males, 30 and 45. Females, 20 and 40.	

* Any candidate presenting himself within one month after attaining the prescribed age will be eligible for examination.

Department, and Qualifications required.	Limits of Age.	Fee for Examination.
ROYAL OBSERVATORY, EDINBURGH.		
[SCH. A.] SECOND ASSISTANT ASTRONOMERS - -	17 and 33. *See* note * on p. 37.	10*s.*
1. Handwriting. 2. Orthography. 3. Arithmetic (to Vulgar and Decimal Fractions). 4. English Composition. 5. Mathematics, *i.e.*— Algebra, including Quadratic Equations. Plane Trigonometry, including the Solution of Triangles. Candidates failing in any of the above-named subjects will not be eligible. The successful candidate will not be finally appointed unless on probation he shall satisfy the head of the Department as to his fitness in respect of the following among other qualifications, viz. :— Quickness of sight. Neatness in handling delicate instruments, and physical strength for working others. Punctuality.		
ROYAL PARKS AND GARDENS.		
I. [M.] GATEKEEPERS - - - - -	20 and 40. Servants of the Royal Family are eligible up to any age.	
1. Reading. 2. Writing.		
II. [M.] HEAD PARK-KEEPERS AND GAMEKEEPERS IN RICHMOND PARK.	25 and 40.	
1. Reading. 2. Spelling (simple words). 3. Reading. 4. Arithmetic (the first four rules).		
SALMON FISHERIES' OFFICE.		
I. [SCH. A.] CLERKS—(Appointments before the Order in Council of 12 Feb. 1876 were made under Scheme for Class II.)		
II. [M.] ERRAND BOYS - - - - -	13 and 16.	
1. Reading. 2. Writing.		
SCIENCE AND ART DEPARTMENT.		
I. [SCH. A.] ASSISTANT NATURALISTS AND OFFICIAL EXAMINERS (Scheme not yet arranged).		

Department, and Qualifications required.	Limits of Age.	Fee for Examination.
SCIENCE AND ART DEPARTMENT—*continued.*		
II. [SCH. A.] ASSISTANT CURATORS IN THE MUSEUM OF PRACTICAL GEOLOGY.	25 and 35. *See* note * on p. 37.	
Part I.—Preliminary.		10*s.*
1. Handwriting and Orthography. 2. Transcribing. 3. Arithmetic (including Vulgar and Decimal Fractions). 4. English Composition.		
Part II.—Competitive.		1*l.*
1. Latin. 2. French. 3. German. 4. Chemistry. 5. Geology. 6. Mineralogy. 7. Metallurgy.		
III. [SCH. A.] SECRETARIAL CLERKS; ASSISTANT BOOK-KEEPERS; ACCOUNTANTS; BOOK-KEEPERS; STORE-KEEPERS; DEPUTY STORE-KEEPERS; ASSISTANT LIBRARIANS AND CLERKS IN ROYAL SCHOOL OF MINES; CLERKS IN THE ROYAL COLLEGE OF SCIENCE, DUBLIN, AND THE ROYAL DUBLIN SOCIETY. (Scheme not yet arranged.)		
IV. [SCH. A.] CLERKS IN THE STORE BRANCH.	18 and 35. *See* note * on p. 37.	10*s.*
1. Handwriting. 2. Orthography. 3. Transcribing. 4. Arithmetic (including Vulgar and Decimal Fractions). 5. English Composition. 6. Book-keeping. Candidates failing in any of the above-named subjects will not be eligible.		
V. [SCH. A.] MUSEUM CLERKS. (Appointments before the Order in Council of 12 Feb. 1876 were made under Scheme for Class II.)		
VI. [SCH. A.] CLERKS IN THE EDINBURGH MUSEUM OF SCIENCE AND ART. 1. Handwriting. 2. Orthography. 3. Arithmetic (including Vulgar and Decimal Fractions). 4. English Composition. 5. Geography. 6. French. Candidates failing in any of the above-named subjects will not be eligible.	18 and 35. *See* note * on p. 37.	
VII. [SCH. A.] SUPPLEMENTARY CLERKS, SECRETARY'S OFFICE, SOUTH KENSINGTON MUSEUM, AND IN INSTITUTIONS AFFILIATED. (Scheme not yet arranged.)		

Department, and Qualifications required.	Limits of Age.	Fee for Examination.
SCIENCE AND ART DEPARTMENT—*continued.*		
IX. [M.] TEMPORARY ASSISTANT GEOLOGISTS 1. Handwriting and Orthography. 2. Arithmetic (including Vulgar and Decimal Fractions). 3. English Composition. 4. Drawing (copying part of Geological Section). 5. Euclid (Book I.). 6. Use of common mathematical instruments.	17 and 50.	
X. [M.] TEMPORARY FOSSIL COLLECTORS 1. Writing from Dictation. 2. Arithmetic (elementary).	18 and 30.	
XI. [M.] MATRONS OF FEMALE TRAINING SCHOOL, SOUTH KENSINGTON; HOUSEKEEPERS, Science and Art Department. (Scheme not yet arranged.)		
XII. [M.] HOUSEKEEPER IN GEOLOGICAL MUSEUM AND ROYAL SCHOOL OF MINES. 1. Reading print and MS. 2. Writing. 3. Arithmetic (sufficient for the keeping of a petty cash book).	25 and 45.	
XIII. [M.] ATTENDANTS, BOYS, MESSENGERS, AND ASSISTANTS ON THE UNIVERSAL CATALOGUE OF ART BOOKS; PORTERS AND SERVANTS at Jermyn Street, Edinburgh Museum, Royal Dublin Society, Natural History Museum (Dublin), and Royal College of Science; and PORTERS and GENERAL ASSISTANTS attached to the staff of the Geological Survey. 1. Reading print and manuscript. 2. Writing from dictation. 3. Elementary Arithmetic.	13 and 35. Army pensioners are eligible up to 42.	
SCOTCH EDUCATION BOARD.		
I. [M.] SENIOR CLERKS. (*a*)		
[M.] ACCOUNTANT'S CLERK (*a*) 1. Handwriting and Orthography. 2. Arithmetic. 3. Copying MS. 4. Digesting Returns into Summaries. 5. English Composition. 6. Geography of Scotland. 7. History of Scotland.	25 and 35.	
II. [M.] JUNIOR CLERKS (*a*) 1. Handwriting and Orthography. 2. Arithmetic (to Vulgar and Decimal Fractions). 3. Copying MS. 4. English Composition.	18 and 30.	
III. [M.] OFFICE KEEPERS. 1. Reading. 2. Writing (including spelling). 3. Arithmetic (sufficient for the keeping of a petty cash book).		
IV. [M.] MESSENGERS 1. Handwriting and Orthography. 2. Elementary Arithmetic.	13 and 16.	

(*a*) *See* note on p. 36.

Department, and Qualifications required.	Limits of Age.	Fee for Examination.
SCOTCH EDUCATION DEPARTMENT.		
[M.] INSPECTORS' ASSISTANTS - - - - 1. Reading. 2. Handwriting and Orthography. 3. Arithmetic (including Practice, Bills of Parcels, Proportion, and Vulgar and Decimal Fractions). 4. English Composition. 5. Elementary Grammar (to be tested by Composition, or by the analysis of "simple" or short "complex" sentences). The examination to be based on Standards 5 and 6 of the current Code.*	22 and 35.	
SEAMEN'S REGISTRY OFFICE.		
[O. C.] LOWER DIVISION CLERKS.		
II. [M.] OFFICE-KEEPERS, MESSENGERS, PORTERS, AND LITHOGRAPHERS. 1. Reading. 2. Writing from Dictation. 3. Arithmetic (elementary).	— and 40. With exceptional rule as for office-keepers, &c. in the Board of Trade.	
III. [M.] BOY MESSENGERS - - - - 1. Writing tolerably a few lines. 2. Reading Manuscript. 3. Addition (simple and compound).	12 and 18.	
STATIONERY OFFICE.		
I. [SCH. A.] CLERKS.—(Appointments before the Order in Council of 12 Feb. 1876 were made under Scheme for Class II.)		
II. [SCH. A.] ASSISTANT EXAMINERS OF PAPER.—(Scheme not yet arranged.)		
III. [SCH. A.] ASSISTANT EXAMINERS OF BINDING - *Part I.—Preliminary.* 1. Handwriting. 2. Orthography. 3. Arithmetic (to Vulgar and Decimal Fractions). 4. English Composition. Candidates will be required to show what preliminary training or technical Education they have undergone to qualify themselves for a situation of this nature, and they must satisfy the Civil Service Commissioners that they possess the special qualifications necessary for the office. They must have served the usual apprenticeship to the trade of binding, and must have been a sufficient time in actual employment.	25 and 36. *See* note * on p. 37.	5*s*.

* The Code is "revised annually; the character of the examination for the post of Inspectors' Assistant is, therefore, liable to change from year to year."

Department, and Qualifications required.	Limits of Age.	Fee for Examination.
STATIONERY OFFICE—*continued.*		
Assistant Examiners of Binding—*continued.*		
Part II.—Competitive.		10*s.*
1. Knowledge of binding. Candidates must have a thorough knowledge of good work, and the materials required to produce it; they should consequently be able to detect defective work or inferior materials. 2. Estimating. They must be able readily to calculate the quantity of paper required for any number of books, in the different sizes of folio, quarto, octavo, &c., and to cast up an account with ease. The competition will be decided partly by the number of marks given for answers, written or oral, to questions on the above-mentioned subjects, and partly by such testimony as the Commissioners may obtain from persons of practical experience as to the relative fitness of the candidates.		
IV. [SCH. A.]—Receiver and Examiner of Job Printing.	23 and 30.	
Part I.—Preliminary.	*See* note * on p. 37.	5*s.*
1. Handwriting. 2. Orthography. 3. Arithmetic (to Vulgar and Decimal Fractions). 4. English Composition. Candidates will be required to show what preliminary training or technical Education they have undergone to qualify themselves for a situation of this nature, and they must satisfy the Civil Service Commissioners that they possess the special qualifications necessary for the office. They must have served the usual apprenticeship to the trade of printing, and must have been recently and for a sufficient time in actual employment.		
Part II.—Competitive.		10*s.*
1. Knowledge of printing. Candidates must have a thorough knowledge of good work, both as to the composition and presswork. They should be able readily to detect literal errors and defective execution of any sort, and to count the number of copies of each job with facility. 2. Estimating. Candidates must be able readily to calculate the quantity of paper required for any job, and to cast up accounts with ease. The competition will be decided partly by the number of marks given for answers, written or oral, to questions on the above-mentioned subjects, and partly by such testimony as the Commissioners may obtain from persons of practical experience as to the relative fitness of the candidates.		

Department, and Qualifications required.	Limits of Age.	Fee for Examination.
STATIONERY OFFICE—*continued.*		
V. [M.] MESSENGERS - - - - -	25 and 40.	
1. Reading. 2. Writing from Dictation. 3. Arithmetic (elementary).		
VI. [M.] SECOND CLASS OF THE SUBORDINATE DEPARTMENT.	Under 45.	
1. Reading. 2. Writing. 3. Arithmetic (elementary).		
VII. [M.] CARMEN. (Compound Addition only.)	Under 45.	
SUPERVISION (BOARD OF), SCOTLAND.		
[M.] CLERKS - - - - - -	18 and 30.	
1. Handwriting and Orthography. 2. Arithmetic (including Vulgar and Decimal Fractions). 3. Correspondence.		
TEMPORARY COMMISSIONS.		
I. [M.] CLERKS - - - - - -	18 and 40.	
1. Handwriting and Orthography. 2. Elementary Arithmetic. 3. English Composition. 4. Any subject specially requisite in each particular case.		
II. [M.] OFFICE-KEEPERS, MESSENGERS, AND OTHER SUBORDINATE OFFICERS.	— and 50. With an extension up to any age for persons who have previously served in any of these capacities.	
1. Reading. 2. Writing. 3. Addition and Subtraction (simple and compound).		
TRADE, BOARD OF.		
I. [O. C.] LOWER DIVISION CLERKS.		
II. [M.] SHIPWRIGHT SURVEYORS, NAUTICAL SURVEYORS, AND ENGINEER SURVEYORS.	25 and 45.	
1. Handwriting and orthography. 2. Arithmetic (including Vulgar and Decimal Fractions). 3. English Composition (moderate proficiency). 4. The requisite technical subjects.		
III. [M. Cl. VIII.] SANITARY SURVEYORS.—(Appointments will be made under Clause VII. of the Order in Council of 4 June 1870.)		

Department, and Qualifications required.	Limits of Age.	Fee for Examination.
TREASURY.		
I. [SCH. A.] CLERKS. (Scheme for Class I.)		
II. [SCH. A.] CLERKS IN THE SOLICITOR'S OFFICE -	20 and 30. *See* note * on p. 37.	2*l.*
No candidate will be eligible who has not within the last five years had at least three years' experience as a solicitor or as an articled clerk in a Solicitor's Office.		
Obligatory Subjects.		
1. Handwriting. 2. Orthography. 3. Arithmetic (including Vulgar and Decimal Fractions). 4. English Composition. 5. Criminal Law, and Proceedings before Justices of the Peace. 6. Law of Evidence. 7. Common Law Procedure and Practice. 8. Elements of Conveyancing.		
Optional Subjects.		
9. Geography. 10. English History. 11. Latin. 12. French or German. 13. Mercantile Book-keeping. 14. Equity and Practice of the Courts. 15. Bankruptcy and Practice of the Courts.		
III. [SCH. A.] SUPPLEMENTARY CLERKS IN THE SOLICITOR'S OFFICE.	18 and 30. *See* note * on p. 37.	10*s.*
1. Handwriting. 2. Orthography. 3. Arithmetic (to Vulgar and Decimal Fractions). 4. English Composition.		
Candidates failing in any of the above-named subjects will not be eligible.		
No candidate will be eligible who has not within the last five years served for at least two years as a clerk (not articled) in a Solicitor's Office.		
[O. C.] LOWER DIVISION CLERKS.		

Department, and Qualifications required.	Limits of Age.	Fee for Examination.
TREASURY—*continued.*		
V. [M.] Office Keepers 1. Reading. 2. Writing (including the spelling of simple words). 3. Elementary Arithmetic.	25 and 40. A person already in the Civil Service will be eligible up to any age, provided that he had not attained the age of 40 when he first entered the Public Service.	
VI. [M.] Messengers (including Messengers to Chancellor of the Exchequer).	21 and 35. Candidates transferred from other departments will be regarded as eligible up to any age, provided they were within the prescribed limits when they entered the service, and that their employment has been continuous.	
VII. [M.] Binders 1. Reading. 2. Writing from Dictation. 3. Arithmetic (elementary).	25 and 40.	
ULSTER KING-AT-ARMS' OFFICE (DUBLIN).		
[M.] Messengers 1. Writing from Dictation. 2. Elementary Arithmetic.	20 and 35.	
VALUATION OFFICE (IRELAND).		
I. [M.] Valuers 1. Reading. 2. Writing and Spelling. 3. Arithmetic (including Reduction, Proportion, and Practice). 4. Requisite technical knowledge.	25 and 45.	
II. [M.] Clerks (*a*) 1. Exercises to test Handwriting and Orthography. 2. Arithmetic (including Vulgar and Decimal Fractions). 3. Euclid (Books I.–IV. and VI.). 4. Drawing (Geometrical). 5. English Composition.	19 and 28.	
III. [M.] Assistant Messengers or Porters 1. Reading. 2. Writing (including the ability to spell tolerably). 3. Arithmetic (first four rules).	18 and 30.	

(*a*) *See* note on p. 36.

Department, and Qualifications required.	Limits of Age.	Fee for Examination.

WAR OFFICE.

I. [**SCH. A.**] JUNIOR CLERKS IN THE CENTRAL DEPARTMENT; JUNIOR CLERKS IN THE DEPARTMENT OF THE SURVEYOR-GENERAL OF THE ORDNANCE (*i.e.*, SUPPLIES AND STORES DIVISION AND CONTRACT DIVISION); JUNIOR CLERKS IN THE DEPARTMENT OF THE FINANCIAL SECRETARY (ACCOUNTANT-GENERAL'S DIVISION).—(Scheme not yet arranged.)

II. [**SCH. A.**] JUNIOR CLERKS IN THE DEPARTMENT OF THE OFFICER COMMANDING-IN-CHIEF (*i.e.*, IN THE ADJUTANT AND QUARTERMASTER-GENERAL'S DIVISION, AND MILITARY SECRETARY'S DIVISION).—(Scheme not yet arranged.)

III. [**O. C.**] LOWER DIVISION CLERKS, JUDGE ADVOCATE-GENERAL'S OFFICE.

IV. [**SCH. A.**] CLERKS IN OFFICE OF COMMANDER OF THE FORCES, IRELAND.—(Appointments before the Order in Council of 12 Feb. 1876 were made under Scheme for Class II.)

[**SCH. A.**] CLERKS IN OTHER MILITARY OFFICES, IRELAND.—(Scheme not yet arranged.)

V. [**SCH. A.**] CONVEYANCING CLERKS IN SOLICITOR'S OFFICE.—(Scheme not yet arranged.)

VI. [**O. C.**] SUPPLEMENTAL CLERKS (INCLUDING SUPPLEMENTAL CLERKS IN ADJUTANT AND QUARTERMASTER-GENERAL'S DIVISION AND MILITARY SECRETARY'S DIVISION).

[*Clerks of the Lower Division have received appointments in these Divisions.*]

VII. [**SCH. A.**] SUPERINTENDING CLERKS, ROYAL ARMY CLOTHING FACTORY.—(Appointments before the Order in Council of 12 Feb. 1876 were made under Scheme for Class II.)

VIII. [**SCH. A.**] CLERKS IN THE CONTROL ESTABLISHMENT, THE CLOTHING ESTABLISHMENT, THE MANUFACTURING DEPARTMENTS, AND THE ROYAL ENGINEER DEPARTMENT.—(Scheme not yet arranged.)

IX. [**SCH. A.**] DRAUGHTSMEN IN ROYAL GUN FACTORIES.—(Scheme not yet arranged.)

X. [**SCH. A.**] DRAUGHTSMEN IN ROYAL ENGINEER DEPARTMENT.—(Scheme not yet arranged.)

XI. [**SCH. A.**] JUNIOR ASSISTANTS IN CHEMICAL ESTABLISHMENT.—(Scheme not yet arranged.)

[An appointment has been made under Clause VII. of the Order in Council of the 4th June 1870.]

XII. [**SCH. A.**] TEMPORARY ASSISTANTS IN THE CHEMICAL DEPARTMENT.—(Scheme not yet arranged.)

[An appointment has been made under Clause VII. of the Order in Council of 4th June 1870.]

Department, and Qualifications required.	Limits of Age.	Fee for Examination.
WAR OFFICE—*continued.*		
XIII. [SCH. A.] TEMPORARY SCHOOLMASTERS IN WOOLWICH ARSENAL SCHOOL. (Appointments have been made under Clause VII. of the Order in Council of 4th June 1870.)		
XIV. [SCH. A.] ACCOUNTANTS - - - - [SCH. A.] CLERKS IN THE OFFICE OF THE DIRECTOR-GENERAL OF MILITARY EDUCATION. [SCH. A.] MEDICAL CLERKS AT GAMBIA.—(Schemes not yet arranged.)		
XV. [M.] CIVILIAN CLERKS IN MILITARY OFFICES - 1. Handwriting and Orthography. 2. Arithmetic (including Vulgar and Decimal Fractions). 3. English Composition, so far as to test the ability of a candidate to write an original letter with ease and correctness.	18 and 30.	
XVI. [M.] QUEEN'S MESSENGERS, PORTERS, AND LETTER CARRIERS IN THE CENTRAL DEPARTMENT.	20 and 35. The maximum to be extended to 40 for candidates who may have entered the service as temporary messengers before 35; and to 46 for pensioners.	
[M.] MESSENGERS IN THE WAR OFFICE, IN THE DEPARTMENT OF THE OFFICER COMMANDING-IN-CHIEF, AND IN THE ADJUTANT AND QUARTER-MASTER GENERAL'S DIVISION. 1. Reading. 2. Writing. 3. Arithmetic (elementary).	— to 35. With extension to 40 for pensioners from the army and discharged soldiers, and to any age for pensioners from the army or navy who have served continuously as temporary registered messengers from a time at which they were under 40.	
XVII. [M.] MESSENGERS IN THE JUDGE ADVOCATE GENERAL'S OFFICE. 1. Handwriting and Orthography. 2. Arithmetic (elementary).	20 and 35. With extension to 45 for pensioners from the army or navy.	
XVIII. [M.] WOMEN (HOUSEKEEPERS, NURSES, COOKS, &c.). 1. Reading. 2. Writing. 3. Arithmetic (simple Addition and Subtraction).	23 and 40.	
XIX. [M.] CLERKS IN THE CONTROL DEPARTMENT IN THE WEST INDIES COMMAND. 1. Handwriting and Orthography and Grammatical Correctness. 2. Arithmetic (elementary).	18 and 30. Except in the case of persons who have been employed in other capacities, or in other branches of the public service, when exceptions may be made, provided the age of the candidate did not exceed 30 on the first commencement of his continuous public service.	
XX. [M.] STOREKEEPERS, ASSISTANT STOREKEEPERS, AND ISSUERS IN THE CONTROL DEPARTMENT. 1. Handwriting and Orthography. 2. Arithmetic (elementary).	— and 30. 35 at stations on the African coast. Persons already in the Public Service may be transferred to these situations, provided they were, when they first entered the service, under the maximum age for admission to the class to which they may be transferred, and have served continuously.	
XXI. [M.] SUPERINTENDENTS OF TRANSPORT IN THE CONTROL DEPARTMENT. 1. Reading. 2. Writing. 3. Arithmetic (elementary).	18 and 35. Pensioners may be appointed up to 42.	

Department, and Qualifications required.	Limits of Age.	Fee for Examination.
WAR OFFICE—*continued.*		
XXII. [W.] STOREHOLDERS IN THE CONTROL DEPARTMENT 1. Handwriting, Orthography, and Grammatical Correctness. 2. Arithmetic (elementary). 3. Book-keeping by single entry. In the case of men advanced from the class of labourers or from foremen, on account of their industry and ability, to the above appointments, the following subjects only shall be required:—1. Exercises in handwriting; 2. Arithmetic (elementary); 3. Book-keeping by single entry.	25 and 40.	
XXIII. [W.] MASTER ARTIFICERS, FOREMEN, ARMOURERS, OFFICE KEEPERS, AND OTHERS IN THE CONTROL SUBORDINATE ESTABLISHMENT.	— and 35.*	
[W.] VIEWERS - - - - - -	— and 45.†	
1. Reading. 2. Writing. 3. Arithmetic (elementary).		
XXIV. [SCH. A.] CLERKS OF THE WORKS, ROYAL ENGINEER DEPARTMENT.—(Scheme not yet arranged.)		
XXV. [W.] OFFICE KEEPERS, FOREMEN, LABOURERS, &c. IN THE ROYAL ENGINEER DEPARTMENT. 1. Reading. 2. Writing. 3. Arithmetic (elementary).	— and 35.‡	
XXVI. [W.] INSPECTORS OF CLOTHING, ROYAL ARMY CLOTHING FACTORY. 1. Writing from Dictation. 2. Arithmetic (elementary). 3. Copying. (Appointments have been made under Clause VII. of the Order in Council of 4th June 1870.)	— and 45.	
XXVII. [W. Cl. vii.] STEWARDS AND COMPOUNDERS IN LOCK HOSPITALS. 1. Reading. 2. Writing. 3. Arithmetic (elementary). Appointments are made under Clause VII. of the Order in Council of the 4th June 1870, on the production of a certificate from the Army Medical Board that the candidate is qualified as a compounder, and on his passing in the above subjects.	— and 35.	
XXVIII. [W.] MATRONS IN LOCK HOSPITALS - - 1. Reading. 2. Writing. 3. Arithmetic (simple addition and subtraction).	23 and 45.	
WOODS, OFFICE OF.		
I. [SCH. A.] ASSISTANT CLERKS - - - 1. Handwriting. 2. Orthography. 3. Arithmetic (including Vulgar and Decimal Fractions, and the Measures and Denominations in use in various parts of Scotland). (*cont.*)	23 and 30. *See* note * on p. 37.	2*l.*

* If pensioners from the cavalry, 43 years; if pensioners from other arms of the service, 42 years. An artificer or labourer may be promoted to this class up to 55, provided he were appointed to the permanent establishment in the inferior capacities before 35, 43, or 42 respectively, and that his service has been continuous.

† Viewers to be eligible in regard to age provided that they have been appointed and continued to serve in the Department previous to attaining the age of 45, and that their appointment as permanent Viewers takes place before they attain the age of 55.

‡ Persons may be appointed to the Royal Engineer and Barrack Departments subsequently to their discharge to pension from the Army up to the age of 45.

Department, and Qualifications required.	Limits of Age.	Fee for Examination.
WOODS, OFFICE OF—*continued.*		
ASSISTANT CLERKS—*continued.* 4. English composition. 5. Accounts and Book-keeping. 6. Scotch Law. 7. Latin Translation. Candidates will be required to show what business habits and practical experience they have acquired to qualify themselves for a situation of this nature, and they must satisfy the Civil Service Commissioners on this point before they can be admitted to the competition. Their knowledge of Scotch Law must especially include some acquaintance with the Law as to Teinds, and the Law relating to Salmon and other Sea Fishings. They must also possess practical experience of the Scotch mode of conducting proceedings in each subject.		
II. [SCH. A.] JUNIOR CLERKS - - - - *Obligatory Subjects.* 1. Handwriting. 2. Orthography. 3. Arithmetic (including Vulgar and Decimal Fractions). 4. English Composition. 5. Précis. 6. Digesting Returns into Summaries. 7. An elementary knowledge of the law of Real Property, especially the law of Landlord and Tenant. 8. An elementary knowledge of conveyancing. *Optional Subjects.* 9. Translation from Latin into English. 10. Geography of the British Isles. 11. History of England. Candidates will be required to show what preliminary training or technical education they have undergone to qualify themselves for a situation of this nature. No Candidate will be eligible who has not had three years' experience as a clerk in a solicitor's office.	20 and 30. *See* note * on p. 37.	2*l.*
III. [SCH. A.] SUPPLEMENTARY CLERKS - - 1. Handwriting. 2. Orthography. 3. Arithmetic (to Vulgar and Decimal Fractions). 4. English Composition. 5. Précis. 6. An elementary knowledge of the law of Real Property, especially the law of Landlord and Tenant. Candidates will be required to show what preliminary training or technical education they have undergone to qualify themselves for a situation of this nature. No Candidate will be eligible who has not for two years been serving as a clerk (not articled) in a solicitor's office.	19 and 23. *See* note * on p. 37.	1*l.*
IV. [O. C.] LOWER DIVISION CLERKS.		
V. [M.] MESSENGERS - - - - - 1. Reading. 2. Writing. 3. Arithmetic (elementary).	21 and 35.	

SITUATIONS added to SCHEDULE A. of the ORDER IN COUNCIL of 4th June 1870.

Department.	Date of Publication in the London Gazette.
Second Class Assistants of Excise in the Inland Revenue.	3 January 1871.
Out-door Officers in the Customs - - -	30 December 1870.
Clerks in Convict Prisons,* and in the Office of the Directors of Convict Prisons.	14 November 1871.
Clerks in the Metropolitan Police Courts - -	"
Clerks in the Office of the Inspectors of Factories -	"
Clerks in the Office of the Inspectors of Salmon Fisheries.	"
Clerks in the Office of the Inspectors of Burial Grounds.	"
Clerks in the Public Record Office (Ireland) -	12 January 1872.
Clerks in the Lunacy Commission (England) -	"
Clerks in the Office of Prison Managers (Scotland)	22 March 1872.
Situations under the Local Government Board in like manner and so far as situations formerly held under the Poor Law Board.	1 April 1873.
Junior Clerks in the Superior Establishment, and Junior Clerks in the Supplementary Establishment of the Ecclesiastical Commission.	"
Patent Office - - - - -	"
Junior Clerks in the Office of the Comptroller in Bankruptcy.	27 June 1873.
Home Office and Subordinate Departments - -	9 September 1873.
Clerk and Copying Clerk in the Registry of Friendly Societies.	18 February 1876.

* Withdrawn from Schedule A. by notice in London Gazette, 15 September 1874.

SITUATIONS withdrawn from SCHEDULE A. of the ORDER IN COUNCIL of 4th June 1870.

Department and Situation.		Date of Publication in the London Gazette.
Out-door Officers,* Boatmen, and Watermen in the Customs.		18 October 1870.
Second Class Assistant of Excise, Inland Revenue †		„
Clerks and Enumerators in connexion with the taking of the Census of 1871.		1 November 1870.
Office Keepers	Throughout Her Majesty's Civil Establishments.	29 November 1870.
Messengers		
Porters and Gatekeepers		
Journeymen Artificers		
Park-keepers and Woodmen		
Workmen		
Fire-lighters and Firemen		
Cleaners		
Labourers		
Warders, Matrons, and other subordinate servants in Prisons and Hospitals.		
Attendants		
Domestic Servants (male and female)		
Inspectors' Assistants in the Education Department		6 January 1871.
Junior Stamper in the Inland Revenue		24 January 1871.
University of London		24 March 1871.
Excise Preventive Men (Scotland) in the Inland Revenue.		14 July 1871.
Temporary Third Clerk in the Judicial Department of the Privy Council Office.		1 March 1872.
Foreman of the Press Room, Foreman of the Die Department, and Gasfitter and Lamplighter in the Mint.		7 January 1873.
Subordinate Appointments made locally in the Control Department in the Colonies.		6 June 1873.
Temporary Draughtsman and Clerk of Works, employed locally under the provisions of "The Military Forces Localization Act, 1872."		22 July 1873.
Civil Assistants in the Ordnance Survey Department of the Office of Works who have served continuously from a date preceding the 29th September 1870.		11 November 1873.
Situations created under the second of the Admiralty Regulations, dated the 1st November 1873, intituled "Regulations for appointment of Admiralty Writers."		23 December 1873.
Temporary Assistant Geologists and Temporary Fossil Collectors in the Science and Art Department.		8 May 1874.

* Restored to Schedule A. by notice in London Gazette, 30 December 1870.
† Restored to Schedule A. by notice in London Gazette, 3 January 1871.

Department and Situation.	Date of Publication in the London Gazette.
Warders, Matrons, and other subordinate servants in Prisons, Lunatic Asylums, and Hospitals.	9 June 1874.
Senior Warehousemen, Inland Revenue - -	26 June 1874.
Sub-Inspector of Factories in the Home Department	28 July 1874.
Light Keeper and Assistant Light Keeper at the Island of Sombrero.	18 August 1874.
All situations in Convict Prisons and State Lunatic Asylums in Great Britain.	15 September 1874.
Clerk in the Offices of the Commissioner and the Receiver of Metropolitan Police.	16 March 1875.
The following situations on the Established and Hired Wages † Lists of Her Majesty's Naval Hospitals and Marine Infirmaries at Home and Abroad:— Matrons, Butlers or Stewards,* Assistant or under Stewards, Porters or Messengers, Gardeners, Cooks,* Assistant Cooks, Male and Female Attendants on Lunatics, Wardmasters, Dispensarymen, Hospital Peons (Natives), Barbers, Plumbers and Overseers of Gas, Foremen of Washing Machinery, Engine Drivers,* Assistant Engine Drivers, Carpenters, Boatmen, Principal or Ordinary Labourers employed in any capacity, and Watchmen.	11 June 1875.
Engineman in the Department of Inland Revenue -	3 September 1875.
Foreman of Factory in Her Majesty's Dockyards -	16 November 1875.
Foreman of Boiler-makers in H.M. Dockyards -	25 April 1876.
Civilian Clerks in Military Offices at Out Stations (War Office).	3 April 1877.
Temporary Assistant Chemist in the War Office -	8 May 1877.
Engineer Surveyor, Shipwright Surveyor, Nautical Surveyor, and Sanitary Surveyor in the Department of the Board of Trade.	31 August 1877
Draughtsman in the Department of the Controller of the Navy.	22 January 1878.
Situations of Usher and Assistant Clerk, respectively, in the Metropolitan Police Courts.	7 May 1878.
All situations of whatever kind within the meaning of the Prisons Act, 1877.	27 August 1878.
The office of Timekeeper, Storekeeper, and Clerk and Cattle Account Keeper in the Phœnix Park, Dublin.	3 September 1878.
The situation of clerk in the office of the registrar of Petty Sessions Clerks, Ireland.	8 October 1878.
Draughtsman in the Prisons Department, Scotland -	6 December 1878.

* At hospitals where there are no established Assistants of these ratings available for promotion in the ordinary course.

† The situations on the *Hired* Wages List have since (26 June 1877) been gazetted into Schedule B.

SITUATIONS added to SCHEDULE B. of the ORDER IN COUNCIL of 4th June 1870.

(*a*.) In more than one Department :—

(1.) All situations in which it may become necessary, in order to meet the exigencies of the public service, to employ temporarily, so long as that necessity lasts, persons who have not been certificated or registered by the Civil Service Commissioners; provided that such employment have the previous approval of the Treasury, be reported at once by the chief authorities of the department in which it occurs to the said Civil Service Commissioners, and be discontinued as soon as such Commissioners are able to supply the service conformably to the Orders in Council of 4th June 1870, or 19th August 1871, as applicable to each case. (16 January 1872.)

(2.) All situations in prisons and in criminal lunatic asylums in Great Britain and Ireland during a period not exceeding three months from the date at which the persons appointed to such situations shall have begun to be paid the salaries attached to them. (29 May 1874.)

(*b*.) In particular Departments :—

Department.	Date of Publication in London Gazette.	Class of Situation.
ADMIRALTY - -	1 Oct. 1872	Attendant in all Naval Hospitals, except Yarmouth Lunatic Asylum. [*Withdrawn from Schedule B.*, 11*th June* 1875.]
	12 May 1874	Tailor - - - }
	,,	Seamstress - - - }
	,,	Laundress - - - }
	,,	Mangler - - - } In all Naval
	,,	Washer - - - } Hospitals.
	,,	Scrubber - - - }
	,,	Servant to Medical Messes - }
	,,	Native Servant - - }
	1 Sept. 1874	Women acting as cleaners or in other duties of domestic service in Admiralty buildings.
	4 Dec. 1874	All temporary situations and employments in the department of the Director of Works.
	4 Aug. 1876	Hired persons of the artificer and labourer classes (including women and boys) employed in Her Majesty's Dockyards and Victualling Yards.
	26 June 1877	Civil subordinate situations or employment borne on the Hired Wages List of Her Majesty's Naval Hospitals and Marine Infirmaries.

Department.	Date of Publication in London Gazette.	Class of Situation.
ADMIRALTY COURT (DUBLIN).	19 Nov. 1875	Charwoman.
ADMIRALTY REGISTRY	5 Oct. 1875	Charwoman.
	14 Jan. 1876	Temporary office of Doorkeeper and Coal Porter.
BANKRUPTCY COURT	5 Oct. 1875	Charwoman.
BRITISH MUSEUM -	1 April 1873	All situations of a menial and mechanical character, except the situation of Messenger and Male Attendant.
BROADMOOR CRIMINAL LUNATIC ASYLUM.	11 Nov. 1873	Stable Boy.
	„	Laundry Maid.
CHARITABLE BEQUESTS COMMISSION (IRELAND).	6 June 1876	Charwoman.
CHARITY COMMISSION	19 Nov. 1875	Charwoman.
	16 March 1877	Firelighter.
CHIEF SECRETARY'S OFFICE (IRELAND) (including the Office in London).	19 Nov. 1875	Charwoman or Office Cleaner.
	20 April 1877	Housemaid in the Office in London.
	11 Sept. 1874	The employment of members of the Dublin Metropolitan Police as clerks in the Veterinary Department.
	13 June 1876	Messenger in the Veterinary Department.
	10 Dec. 1878	Professional Adviser, Travelling Inspectors, and Veterinary Inspectors in the Veterinary Department.
CIVIL SERVICE COMMISSION.	26 June 1874	Charwoman.
COLONIAL OFFICE -	6 June 1876	Charwoman.
COMMISSARY CLERK'S OFFICE, EDINBURGH.	19 May 1874	All situations.
COMMON PLEAS COURT	5 Oct. 1875	Charwoman.
COMMONS, HOUSE OF	26 May 1874	The following situations in the department of the Serjeant-at-Arms: Temporary Cleaner, Fire-lighter, and Watchman.
	26 Feb. 1875	In the department of the Speaker: Porter employed in the Vote Office.
CONSTABULARY, OFFICE OF INSPECTOR GENERAL OF, IRELAND.	19 Nov. 1875	Charwoman or Office Cleaner.
CONVICT SERVICE -	15 June 1874	Deputy Governor.
COPYHOLD, &C. COMMISSION.	5 Oct. 1875	Charwoman.
CROWN OFFICE (SCOTLAND).	23 Nov. 1877	Messenger.
CUSTOMS - -	12 May 1874	Glutmen, preferable and ordinary.
	„	Coal Carriers, Charwomen, and all other persons hired at weekly wages to perform menial or ordinary labour only as it is required.
DEEDS, REGISTRY OF, IRELAND.	5 Oct. 1875	Charwoman.
DEEP SEA EXPLORING EXPEDITION.	9 March 1876	Servant.
DUBLIN METROPOLITAN POLICE OFFICE.	19 Nov. 1875	Charwoman or Office Cleaner.
EDUCATION BOARD (SCOTLAND).	13 Feb. 1874	Accountant.

Department.	Date of Publication in London Gazette.	Class of Situation.
EDUCATION OFFICE -	5 May 1871	Inspector of Returns.
	"	Counsel and Assistant Counsel.
	"	Architect and Assistant Architect.
	23 Feb. 1872	Temporary Inspector of Schools.
	"	Temporary Examiner.
EMIGRATION OFFICE	10 Feb. 1871	Surveyor of Ships.
	"	Stevedore or Surveyor of Stowage.
	5 Oct. 1875	Charwoman.
EPPING FOREST ACT, 1878: ARBITRATOR'S OFFICE.	23 Aug. 1878	All appointments made by the Arbitrator under the provisions of sect. 17 of the above-named Act.
EXAMINERS OF CRIMINAL LAW ACCOUNTS, OFFICE OF.	6 June 1876	Charwoman.
EXCHEQUER AND AUDIT OFFICE.	22 Jan. 1875	Porter, Charwoman.
EXCHEQUER, COURT OF (ENGLAND).	5 Oct. 1875	Charwoman.
EXCHEQUER, COURT OF (IRELAND).	6 June 1876	Charwoman.
FISHERIES, OFFICE OF INSPECTORS OF, IRELAND.	19 Nov. 1875	Charwoman or Office Cleaner.
FOREIGN OFFICE -	10 April 1874	Housemaid.
	10 April 1874	Charwoman.
	23 March 1875	The situation of British Vice-Consul filled up at any date following the 10th day of June 1872 with permission to trade.
	4 June 1878	Teacher of Student Dragomans at Constantinople.
FRIENDLY SOCIETIES REGISTRY.	12 Oct. 1875	Charwoman.
HOME OFFICE -	6 Jan. 1874	Reformatory Agent.
	16 March 1875	So many of the subordinate departments and situations in and under the Home Office as are included in any order or warrant made by the Lords Commissioners of Her Majesty's Treasury, placing them under section 4 of the Superannuation Act, 1859.
	17 Sept. 1875	Labourer.
	12 Oct. 1875	Charwoman.
	12 Dec. 1876	Inspector under section 10 of Cruelty to Animals Act, 1876.
INDIA OFFICE -	19 Nov. 1875	Charwoman.
INLAND REVENUE -	24 Jan. 1871	Machine Boy.
	22 March 1872	Clerk to Surveyors of Taxes.
	26 Sept. 1873	Teller of Postal Wrappers and Post Cards.
	26 June 1874	Junior Warehouseman.
	"	Charwoman.
	"	Coal Porter.
	"	Bookbinder, and
	"	Sewer.
	5 Oct. 1875	Clerk to Inspector of Taxes.
	16 Feb. 1877	Clerks to Collectors of Taxes.
	22 Feb. 1878	Dock Coopers, Cellarmen, and
	"	Tellers of Water-marked paper.
	17 May 1878	Employment in the use of the Patented Machine called "Type Writer."
	29 Oct. 1878	Boy Messenger.

Department.	Date of Publication in London Gazette.	Class of Situation.
LOCAL GOVERNMENT BOARD, ENGLAND.	5 Oct. 1875	Charwoman.
	25 Jan. 1876	Fire-lighter.
LOCAL GOVERNMENT BOARD, IRELAND.	19 Nov. 1875	Charwoman.
	,,	Fire-lighter.
LONDON UNIVERSITY	2 Nov. 1877	Clerk of Convocation.
LORD CLERK REGISTER'S OFFICE (SCOTLAND).	7 Feb. 1871	All Appointments.
LUNACY BOARD (SCOTLAND).	5 Oct. 1875	Charwoman.
LUNATIC ASYLUMS (IRELAND), OFFICE OF INSPECTORS.	19 Nov. 1875	Charwoman or Office Cleaner.
MINT - - -	20 Oct. 1871	Temporary employments as Artificer (men and boys), Packer, Teller, or in any of the situations withdrawn from Schedule A. by notice in the London Gazette of 28th November 1870.*
	9 Oct. 1874	Charwoman.
NATIONAL DEBT OFFICE.	2 Sept. 1873	Housekeeper.
NATIONAL EDUCATION OFFICE (IRELAND).	10 April 1874	Charwoman.
	1 Dec. 1874	Packer employed in the Book Stores.
	30 July 1875	Assistant Housekeeper.
	26 June 1877	Night Watchman.
NATIONAL GALLERY (IRELAND).	6 June 1876	Charwoman.
NATIONAL PORTRAIT GALLERY.	5 Oct. 1875	Charwoman.
PARLIAMENT OFFICE, HOUSE OF LORDS.	22 Sept. 1874	Housemaid or Duster in the Department of the Gentleman Usher of the Black Rod.
	19 Nov. 1875	Charwoman.
PARLIAMENTARY COUNSEL, OFFICE OF.	4 July 1871	Shorthand Writer.
	28 Nov. 1871	Shorthand Writing Clerk.
	19 Nov. 1875	Charwoman.
PATENT OFFICE -	15 May 1874	Charwoman.
PAYMASTER GENERAL'S OFFICE.	9 Oct. 1874	Housemaid, Charwoman, Coal Porter.
POST OFFICE -	12 Jan. 1875	Auxiliary Letter Carrier.
	,,	Telegraph Boy Messenger.
	,,	Charwoman.
	11 Dec. 1877	Binder.
	,,	Needlewoman.
	,,	Medical Officer in the London District.
PRISONS BOARD (SCOTLAND).	6 June 1876	Charwoman.
	21 Nov. 1876	Temporary or occasional substitute for any officer on establishment of General Prison, Perth.
PRISONS BOARD (IRELAND).	19 Nov. 1875	Charwoman or Office Cleaner.
	3 Dec. 1878	Occasional Female Assistant in Prisons where only one Matron is kept.
PRISONS, IRELAND, OFFICE OF INSPECTORS GENERAL.	21 May 1875	Charwoman.

* Referring to certain subordinate situations "throughout Her Majesty's Civil Establishments."

Department.	Date of Publication in London Gazette.	Class of Situation.
PRIVY COUNCIL OFFICE	8 Dec. 1871	Inspector of Foreign Cattle.
	6 Aug. 1872	Assistant Reader for the Press in connexion with the establishment of the Judicial Committee.
	22 May 1874	Charwoman.
	25 Sept. 1874	Coal Porter.
PROBATE COURT (IRELAND).	6 June 1876	Charwoman.
	26 Feb. 1878	Sweeper.
PROBATE COURT REGISTRY AND OFFICES	19 Nov. 1875	Charwoman.
PUBLIC WORKS LOAN COMMISSION.	6 June 1876	Charwoman.
PUBLIC WORKS OFFICE (IRELAND).	1 April 1873	All persons employed temporarily in the Technical Departments.
	22 May 1874	The following situations in connexion with the Tyrone Navigation, the Maigue Navigation, and the Ulster Canal :— Lock-keeper, Gate-keeper, Bridge-keeper, Bank-ranger, Collector, and all situations under whatever name involving similar duties.
	28 May 1875	The employment of Housekeeper in charge of the Vice-Regal residences at Dublin Castle and the Phœnix Park during the periods of their being unoccupied by the Lord Lieutenant.
	5 Oct. 1875	Charwoman.
QUEEN'S UNIVERSITY IN IRELAND.	18 Dec. 1874	Cleaner of Offices of Secretary.
RECORD OFFICE, ENGLAND.	5 Oct. 1875	Charwoman.
RECORD OFFICE, IRELAND.	5 Oct. 1875	Charwoman.
REFORMATORIES, OFFICE OF INSPECTOR OF.	6 Jan. 1874	Housekeeper.
REGISTER OF DEEDS, PROBATIVE WRITS, &c. (SCOTLAND).	7 Feb. 1871	All appointments.
REGISTRAR GENERAL'S OFFICE (ENGLAND).	20 Jan. 1874	Labourer.
	"	Charwoman.
	"	Porter.
	"	Packer.
	"	Binder.
DO. SCOTLAND -	17 July 1874	Superintendent of Statistics.
SASINES, GENERAL REGISTER OF.	16 Dec. 1870	All appointments.
SCIENCE AND ART DEPARTMENT.	17 Feb. 1874	Pensioned member of Police force employed as Attendant at South Kensington.
	14 April 1874	Brass Finisher.
	"	Bricklayer.
	"	Cabinet Maker.
	"	Carpenter and Joiner.
	"	Carver and Gilder.
	"	Chaser and Metal worker.
	"	Draughtsmen, Chief, and others.
	"	Electrotyper.
	"	Engineers, Royal.
	"	Fitter.
	"	Gas Foreman, Attendant, and Fitter.
	"	Labeller.

Department.	Date of Publication in London Gazette.	Class of Situation.
SCIENCE AND ART DEPARTMENT—*cont.*	14 April 1874	Labourer, male and female, including all Cleaners and Stokers.
	"	Locksmith and other Smiths.
	"	Mason.
	"	Modeller and Model Painter.
	"	Moulder and Caster.
	"	Mounter.
	"	Packer.
	"	Painter and Glazier, Foremen and others.
	"	Plasterer.
	"	Polisher.
	"	Printer.
	"	Repairer of Art Objects, &c.
	"	Seamstress.
	"	Turner.
	"	Works, Foreman of.
	4 Dec. 1874	Professional Examiner in Science and Art.
	"	Examiners' Assistant.
	"	Occasional Inspector of Science and Art.
	"	Acting Inspector in Science and Art.
	"	Occasional Examiner in Art.
	"	Organizing Teacher.
	"	Superintendent for Preparation of Examples.
	"	Editor of Catalogues.
	"	Instructor in Decorative Art.
	"	Professional Referee.
	"	Occasional Assistant.
	"	Professor.
	"	Lecturer.
	"	Lecturers' Assistant.
	"	Demonstrator.
	"	Propagator (in Glasnevin Gardens).
	"	Gardener.
	21 Dec. 1875	All employments on the British Executive Staff for the Philadelphia International Exhibition, 1876.
	6 June 1876	Charwoman.
SESSION, COURT OF (SCOTLAND).	19 July 1878	Gownkeeper.
STATIONERY OFFICE -	5 Oct. 1875	Charwoman.
SUPERVISION, BOARD OF, SCOTLAND.	5 Oct. 1875	Charwoman.
TRADE, BOARD OF -	17 Sept. 1872	Gateman at the Government Pier, Dover.
	20 Feb. 1874	Situations at Holyhead Harbour, viz. :—
	"	Overseer of Works.
	"	Assistant Harbour Master.
	"	Dock and Quay Master.
	"	Assistant Dock-keeper.
	"	Light-keeper, Old Harbour.
	"	Chief Boatman and Boatmen.
	"	Labourers.
	"	Policemen.
	"	Carpenter.
	"	Engine Driver.
	"	Mason.
	"	Mason's Labourer.
	"	Watchman.
	"	Light-keeper and Assistant Light-keeper at Cape Pembroke Lighthouse in the Falkland Islands.
	"	Extra Supernumerary Light-keepers at Bahamas.

Department.	Date of Publication in London Gazette.	Class of Situation.
TRADE, BOARD OF—*cont*	18 Aug. 1874	Temporary or Temporary Assistant Lightkeeper at Sombrero.
	9 Feb. 1875	Charwoman.
	1 June 1875	Superintendent of Works at Holyhead Harbour.
	25 April 1876	Coal Porter at No. 1 Whitehall.
	18 June 1876	Clerk (not being chief clerk) to the Solicitor to the Board of Trade.
	3 Sept. 1878	The employments of Clerk to Inspector and Principal Officer of District and of Tapeholder and Messenger (Survey Staff).
TREASURY - -	2 June 1874	Charwoman, Coal Porter, and all other persons hired at weekly wages to perform only menial or ordinary labour as it is required.
	15 June 1875	Receiver of the Small Branches of the Hereditary Revenues of the Crown and of Fines, &c., &c.
WAR OFFICE -	16 Feb. 1875	All temporary employments of a technical character in connexion with the Works Department.
	2 March 1875	Cook and Laundress in Lock Hospitals.
	12 Oct. 1875	Charwoman in War Office and all Subordinate Departments.
	30 March 1877	Temporary Nurse in Lock Hospital.
	8 May 1877	Temporary Assistant in Chemical Department.
WOODS OFFICE OF -	26 Nov. 1872	All situations under the Commissioners of Woods not provided for out of Parliamentary Votes.
		All situations under the direction and control of the Range of Windsor Great Park.
	19 Nov. 1875	Charwoman.
	,,	Domestic Servant.
	12 Sept. 1876	Clerkships in the Solicitor's branch to which appointments are allowed to be made by the Solicitor himself.
WORKS, OFFICE OF -	10 March 1871	Director of Public Works and Buildings.
	,,	Persons employed temporarily in the Technical Departments.
	11 Nov. 1873	Journeyman Artificer.
	,,	Workman.
	,,	Labourer.
	,,	Fire-lighter.
	,,	Fireman.
	,,	Cleaner and Charwoman.
	,,	Warder.
	,,	Domestic Servant.
	,,	Watchman.
	,,	Timekeeper.
	,,	Caretaker.
	,,	Keeper of the Ecclesiastical and other Ruins in Scotland.
	,,	Warder in Glasgow Cathedral and Holyrood Palace.
	,,	Temporary Draughtsman.
	,,	Temporary Clerk of Works.
	,,	Temporary Assistant Clerk of Works.
	,,	Gatekeeper and Constable in Holyrood Park and Linlithgow.

Department.	Date of Publication in London Gazette.	Class of Situation.
WORKS, OFFICE OF—*cont.*	11 Nov. 1873	Civil Assistants in the Ordnance Survey Department, except those who have served continuously from a date preceding the 29th September 1870.
	21 Aug. 1874	Gatekeeper at the entrance into the Birdcage Walk from Queen Square, Westminster.
	21 Aug. 1874	Gatekeepers and Park-keepers or Constables employed in a temporary capacity.
	,,	Under Keepers in Richmond and Bushy Parks.
	10 Dec. 1875	First and second attendant at the Albert Memorial Chapel in Windsor Castle.
	16 May 1876	Gatekeeper and Constable in the Royal Gardens, Kew.

SITUATIONS to which, during the Year 1878, APPOINTMENTS have been made under CLAUSE VII. of the ORDER IN COUNCIL of 4th June 1870.

*** Appointments under Clause VII. of the Order in Council will, under present arrangements, be made as a general rule to those situations which are marked thus (N. Cl. VII.) in the Table of Subjects of Examination and Limits of Age (*see* p. 36).

Department.	Situation.
ADMIRALTY - - -	Hospital Clerk, Royal Naval Hospital, Jamaica.
	Clerk, Royal Naval Hospital, Malta.
	Curator in Naval Museum, Royal Naval College Greenwich.
	Dispenser.
	French Master, H.M.S. "Britannia."
	Instructor in Mathematics, Royal Naval College, Greenwich.
	Schoolmaster, Naval Prison, Lewes.
BRITISH MUSEUM - -	First Class Assistant, Department of Geology.
	Second Class Assistant, Department of Geology.
CHARITY COMMISSION -	First Class Clerk, Junior Division.
CHIEF SECRETARY'S OFFICE (IRELAND).	Chief Clerk, Veterinary Department.
EXCHEQUER AND AUDIT OFFICE.	Examiner, Second Section.
HOME OFFICE - -	Secretary to Prison Commission.
INDIA OFFICE - -	Second Class Clerk.
INLAND REVENUE - -	Assistant Surveyor of Taxes.
LAND REGISTRY OFFICE -	Housekeeper.
LOCAL GOVERNMENT BOARD (IRELAND).	Auditor, Dublin.
METROPOLITAN POLICE COURTS.	Clerk.
	Second Class Clerk.
PATENT OFFICE - -	Compositor or Compiler of the Trade Marks Journal, Trade Marks Registry.
	Third Class Clerk, Trade Marks Registry.
	Attendant.
POST OFFICE - -	Assistant to Medical Officer.
	Assistant in Secretary's Office.
	Female Clerk, Accountant's Office, Edinburgh.
	Second Class Clerk, Surveyor General's Office, Edinburgh.
	Dispensing Assistant.
	Female Returner.
	Postmaster.
	Telegraphist.
	Letter Carrier.
PRISONS SERVICE - -	Compounder.
	Schoolmaster.
PRISONS SERVICE (IRELAND)	Clerk.
REGISTRAR GENERAL'S OFFICE (IRELAND).	Third-class Clerk.
	Fourth-class Clerk.
	Housekeeper.
	Messenger.

Department.	Situation.
REGISTRY OF DEEDS (IRELAND).	Temporary Clerk.
REGISTRY OF PETTY SESSIONS CLERKS (IRELAND).	Junior Clerk.
SCIENCE AND ART DEPARTMENT.	Assistant Librarian, National Library, Dublin.
SCOTCH EDUCATION DEPARTMENT.	Clerk (extra), First Class. Clerk, Second Grade. Second Class Clerk.
TRADE, BOARD OF - -	Clerk on Consultative Establishment. Engineer Surveyor. Medical Inspector, Survey Staff. Nautical Surveyor. Principal Shipwright, Surveyor for Iron Vessels. Principal Shipwright, Surveyor for Wooden Ships. Shipwright Surveyor. Surveyor of Steam Ships. Principal Surveyor for Tonnage. Clerk to the Principal Surveyor for Tonnage.
WAR OFFICE - - -	Clerk, District Paymaster's Office, London. Steward and Compounder, Lock Hospital, Kildare.

*** In addition to the above, Men Clerks (Lower Division) have been appointed to various Departments under Clause VII. of the Order in Council of 4th June 1870, and Clause XII. of the Order in Council of 12th February 1876.

APPENDIX IV.

STATISTICAL TABLES, &c.

RELATING TO THE HOME CIVIL SERVICE.

	Page
A. Number of cases dealt with between 1st January and 31st December 1878	144
B. Number and Particulars of Competitions held between 1st January and 31st December 1878	157
C. Marks obtained in Open Competitions	162
D. Marks obtained in Limited Competitions	200
List of Certificated Candidates, 1st January to 31st December 1878	211

TABLE A.—Showing for each DEPARTMENT the NUMBER of CASES dealt with in the year from January 1, 1878, to December 31, 1878, and the manner in which the cases decided in the same period have been disposed of.

	Number of Cases dealt with.				Number of Persons															
															For whom Certificates were granted.					
															After Open Competition or Open Selection.					
	Of Candidates nominated singly.	Of Candidates nominated to compete.	Of Candidates at Open Competitions.	Of Candidates to be registered as Copyists and Messengers.	Who declined, withdrew, or were absent.	Who were not within the limits of AGE.	Whose HEALTH was not satisfactory.	Whose CHARACTER was not satisfactory.	Who were excluded by Departments for other reasons, or for reasons not mentioned.	Who were REJECTED on Examination.	Who FAILED in Preliminary Examinations.	Who PASSED the Preliminary Examination.	Who were UNSUCCESSFUL in Competition.	For whom Certificates were not required.	Under Scheme I.	For Lower Division.	Under Special Regulations.	After Nomination.	Under Clause VII. of the O in C. of 4 June 1870.	Yet to appear, or still under Consideration.
14	6,224	1,430	10,598	1,762	2,073	84	113	50	130	1,521	1,032	932	4,202	1,635	13	199	835	3,325	311	1,959
32	–	–	132	–	46	–	–	–	–	–	30	56	–	–	–	–	–	–	–	–
85	–	–	785	–	104	–	–	–	–	–	289	327	–	–	–	–	–	–	–	65
77	–	–	77	–	34	–	–	–	–	–	–	–	36	–	13*	–	–	–	–	4
63	–	–	668	–	32	–	1	–	1	–	–	–	456	–	–	172	–	–	–	1
24	124	–	–	–	–	–	–	–	6	4	–	–	–	–	–	–	–	–	112	2
40	–	–	240	–	12	–	–	–	–	–	–	–	67	–	–	34	–	–	–	137
40	–	–	–	1,340	170	–	1	10	2	349	–	–	–	–	–	–	273	–	–	35
33	–	–	–	353	5	1	–	1	–	198	–	–	–	–	–	–	137	–	–	1
12	–	–	–	12	–	–	–	1	–	–	–	–	–	–	–	–	9	–	–	2
77	–	–	–	77	4	3	–	–	–	5	–	–	–	–	–	–	65	–	–	–

ADMIRALTY:—																					
DEPARTMENT OF THE DIRECTOR OF ENGINEERING AND ARCHITECTURAL WORKS:—																					
Architectural Draughtsman -	3	–	–	2	–	1	–	–	–	–	–	–	1	1	–	–	–	–	–	–	–
Accountant Clerk - - -	3	–	–	3	–	1	–	–	–	–	–	–	1	–	–	–	–	–	–	–	1
ROYAL NAVAL COLLEGE, GREENWICH:—																					
Instructor in Mathematics -	1	1	–	–	–	–	–	–	–	–	–	–	–	–	–	–	–	–	–	1	–
Curator in Naval Museum -	1	1	–	–	–	–	–	–	–	–	–	–	–	–	–	–	–	–	–	1	–
[illegible]lalta -	1	1	–	–	–	–	–	–	–	–	–	–	–	–	–	–	–	–	–	1	–
[illegible] Hospital	1	1	–	–	–	–	–	–	–	–	–	–	–	–	–	–	–	–	–	1	–
[illegible] - -	2	2	–	–	–	–	–	–	–	–	–	–	–	–	–	–	–	–	–	2	–
[illegible] - -	1	1	–	–	–	–	–	–	–	–	–	–	–	–	–	–	–	–	1	–	–
[illegible]nd Sab-	8	8	–	–	–	–	–	–	–	–	1	–	–	–	–	–	–	–	6	–	1
[illegible]																					
[illegible]i-	1	1	–	–	–	–	–	–	–	–	–	–	–	–	–	–	–	–	–	1	–
[illegible]om	1	1	–	–	–	–	–	–	–	–	–	–	–	–	–	–	–	–	–	1	–
[illegible] -	8	–	–	6	–	1	–	–	–	–	–	–	–	4	–	–	–	3	–	–	–
[illegible]-	2	2	–	–	–	–	–	–	–	–	1	–	–	–	1	–	–	–	–	–	–
[illegible] -	4	4	–	–	–	–	–	–	–	–	1	–	–	–	–	–	–	–	3	–	–
[illegible] -	384	324	–	–	–	–	–	–	–	1	–	–	–	–	–	–	–	–	331	–	3
[illegible] -	736	–	736	–	–	55	–	–	–	6	–	–	–	–	681	–	–	–	–	–	34
[illegible] -	215	–	–	215	–	4	–	1	–	–	–	–	–	140	61	–	–	–	–	–	–
[illegible] -	250	–	–	250	–	8	–	–	2	–	–	–	–	112	127	–	–	–	–	–	–
[illegible] -	1	–	–	1	–	–	–	–	–	–	–	–	–	–	1	–	–	–	–	–	–
MESSENGERS IN VARIOUS BRANCHES	4	4	–	–	–	–	–	–	–	–	–	–	–	–	–	–	–	–	4	–	–
BRITISH MUSEUM:—																					
Assistants - - - -	26	3	23	–	–	8	–	–	–	1	–	–	–	10	–	–	–	–	5	2	–
Attendants - - - -	5	5	–	–	–	–	–	–	–	–	–	–	–	–	–	–	–	–	4	–	1
[illegible] LUNATIC																					
[illegible] and Atten-	8	8	–	–	–	–	–	–	–	1	–	–	–	–	–	–	–	–	6	–	1
[illegible] COMMIS-																					
[illegible]ssenger -	1	1	–	–	–	–	–	–	–	–	–	–	–	–	–	–	–	–	1	–	–

* These candidates are accounted for also under the titles of the offices to which they were assigned, but they are only once included in the general total.

TABLE A. (continued), showing for each DEPARTMENT the NUMBER of CASES dealt with in the year from January 1, 1878, to December 31, 1878, and the manner in which the cases decided in the same period have been disposed of.

	Number of Cases dealt with.	Number of Persons																		
		Of Candidates nominated singly.	Of Candidates nominated to compete.	Of Candidates at Open Competitions.	Of Candidates to be registered as Copyists and Messengers.	Who declined, withdrew, or were absent.	Who were not within the limits of Age.	Whose HEALTH was not satisfactory.	Whose CHARACTER was not satisfactory.	Who were excluded by Departments for other reasons or for reasons not mentioned.	Who were REMOVED on Examination.	Who FAILED in Preliminary Examination.	Who PASSED the Preliminary Examination.	Who were UNSUCCESSFUL in Competition.	For whom Certificates were not required.	For whom Certificates were granted.				
																Under Solemn I.	After Open Competition or Open Selection.			
																	For Lower Division.	Under Special Regulations.	After Nomination.	Under Clause VII. of the O. in C. of 4 June 1870.
	1	1	1	1	1	1	1	1	1	1	1	1	1	1	1	1	1	1	1	1
CHELSEA HOSPITAL:—																				
Nurses	9	9	1			8	2	1		1					1	1	1	1	8	
CHIEF SECRETARY'S OFFICE, IRELAND:—																				
Chief Clerk in the Veterinary Department.	1	1				1	1	1	1	1	1	1	1	1	1	1	1	1	1	1
Assistant Clerk in the Veterinary Department.	1	1				1	1	1	1	1	1	1	1	1	1	1	1	1	1	1
Messengers	1	1				1	1	1	1	1	1	1	1	1	1	1	1	1	1	1
CHURCH TEMPORALITIES COMMISSION (IRELAND):—																				
Second Class Clerk	10	10	1	1	1	1	1	1	1	1	1	1	1	1	1	1	1	1	1	1
CIVIL SERVICE COMMISSION:—																				
Clerk	1	1	1	1	1	1	1	1	1	1	1	1	1	1	1	1	1	1	1	1
Office Keeper and Head Messenger.	1	1	1	1	1	1	1	1	1	1	1	1	1	1	1	1	1	1	1	1
Messengers	4	4	4	1	1	1	1	1	1	1	1	1	1	1	1	1	1	1	1	1
	1	1	1	1	1	1	1	1	1	1	1	1	1	1	1	1	1	1	1	1
Inside Service	55	55	55	1	1	4	1	1	1	1	1	1	1	1	1	1	1	1	1	1
	11	11	11	1	1	1	1	1	1	1	1	1	1	1	1	1	1	1	1	1
	1	1	1	1	1	1	1	1	1	1	1	1	1	1	1	1	1	1	1	1
rk in Compartment of	1	1	1	1	1	1	1	1	1	1	1	1	1	1	1	1	1	1	1	1
	1	1	1	1	1	1	1	1	1	1	1	1	1	1	1	1	1	1	1	1
	8	8	8	1	1	1	1	1	1	1	1	1	1	1	1	1	1	1	1	1

CONSTABULARY (ROYAL IRISH):—																					
Cadets	43	-	43	-	-	16	1	-	-	-	-	-	-	17	-	-	-	-	6	-	3
Constables for Promotion to Head Constables.	26	-	26	-	-	-	-	-	-	-	-	-	-	-	-	-	-	-	-	-	26
COPYHOLD, INCLOSURE, AND TITHE COMMISSION:—																					
Assistant Record Keeper	1	1	-	-	-	-	-	-	-	-	-	-	-	-	-	-	-	-	1	-	-
Assistant Surveyor	1	1	-	-	-	-	-	-	-	-	-	-	-	-	-	-	-	-	1	-	-
COUNTY SURVEYORS, IRELAND:—																					
County Surveyors	16	-	-	16	-	5	-	-	-	-	-	-	-	10	-	-	-	1	-	-	-
CUSTOMS:—																					
Examining Officers	2	2	-	-	-	-	-	-	-	-	-	-	-	-	2	-	-	-	-	-	-
Out-door Officers	1,800	-	-	1,800	-	552	-	4	5	1	-	-	-	1,069	-	-	-	139	-	-	49
House Porters	3	3	-	-	-	-	1	-	-	-	-	-	-	-	-	-	-	-	2	-	-
	6	6	-	-	-	-	-	-	-	-	-	-	-	-	-	-	-	-	6	-	-
, Constables,	35	35	-	-	-	-	-	1	1	-	1	-	-	-	-	-	-	-	27	-	5
DEEDS,																					
	1	1	-	-	-	-	-	-	-	-	-	-	-	-	-	-	-	-	1	-	-
	4	4	-	-	-	-	-	-	-	-	3	-	-	-	-	-	-	-	-	2	-
	1	1	-	-	-	-	-	-	-	-	-	-	-	-	-	-	-	-	1	-	-
DUBLIN CITY PRISONS:—																					
Subordinate Officers	5	5	-	-	-	1	-	-	-	-	-	-	-	-	-	-	-	-	4	-	-
CRIMINAL																					
1 Steward	1	1	-	-	-	-	-	-	-	-	-	-	-	-	-	-	-	-	1	-	-
Attendants and Subordinate Officers.	8	8	-	-	-	-	1	-	-	-	-	-	-	-	-	-	-	-	5	-	2
ECCLESIASTICAL COMMISSION:—																					
Office Keeper	1	1	-	-	-	-	-	-	-	-	-	-	-	-	-	-	-	-	1	-	-
	4	4	-	-	-	-	-	-	-	-	-	-	-	-	4	-	-	-	-	-	-
	7	7	-	-	-	-	-	-	-	-	1	-	-	-	-	-	-	-	6	-	-
OFFICE:—																					
	2	2	-	-	-	-	-	-	-	1	-	-	-	-	-	-	-	-	-	1	-
	1	1	-	-	-	-	-	-	-	-	-	-	-	-	-	-	-	-	1	-	-
	1	1	-	-	-	-	-	-	-	-	-	-	-	-	-	-	-	-	1	-	-
FACTORY AND WORKSHOPS DEPARTMENT:—																					
Sub-Inspectors	10	3	7	-	-	1	-	-	-	-	-	-	-	2	-	-	-	-	2	-	5

TABLE A. (*continued*), showing for each DEPARTMENT the NUMBER of CASES dealt with in the year from January 1, 1878, to December 31, 1878, and the manner in which the cases decided in the same period have been disposed of.

	Number of Cases dealt with.					Number of Persons										For whom Certificates were granted.					
																After Open Competition or Open Selection.					
	General Total.	Of Candidates nominated singly.	Of Candidates nominated to compete.	Of Candidates at Open Competitions.	Of Candidates to be registered as Copyists and Messengers.	Who declined, withdrew, or were absent.	Who were not within the limits of AGE.	Whose HEALTH was not satisfactory.	Whose CHARACTER was not satisfactory.	Who were excluded by Departments for other reasons, or for reasons not mentioned.	Who were REJECTED on Examination.	Who FAILED in Preliminary Examinations.	Who PASSED the Preliminary Examination.	Who were UNSUCCESSFUL in Competition.	For whom Certificates were not required.	Under Scheme I.	For Lower Division.	Under Special Regulations.	After Nomination.	Under Clause VII. of the O. in C. of 4 June 1870.	Yet to appear, or still under Consideration.
	13	-	13	-	-	-	-	-	-	-	2	-	-	9	-	-	-	-	2	-	-
	3	3	-	-	-	-	-	-	-	-	-	-	-	-	-	-	-	-	3	-	-
	1	1	-	-	-	-	-	-	-	-	-	-	-	-	-	-	-	-	1	-	-
	1	1	-	-	-	-	-	-	-	-	-	-	-	-	-	-	-	-	1	-	-
	6	6	-	-	-	-	-	-	-	-	1	-	-	-	5	-	-	-	-	-	-
	3	3	-	-	-	-	-	-	-	-	2	-	-	-	-	-	-	-	1	-	-
	1	1	-	-	-	-	-	-	-	-	-	-	-	-	-	-	-	-	-	-	1
	3	3	-	-	-	-	-	-	-	1	1	-	-	-	-	-	-	-	1	-	-
	2	2	-	-	-	-	-	-	-	-	-	-	-	-	-	-	-	-	2	-	-
	63	-	-	63	-	10	-	-	-	-	-	-	-	47	-	-	-	6	-	-	-
	4	4	-	-	-	-	1	-	-	1	-	-	-	-	-	-	-	-	2	-	-
	3	3	-	-	-	-	1	-	-	-	-	-	-	-	-	-	-	-	2	-	-
	2	2	-	-	-	-	-	-	-	-	2	-	-	-	-	-	-	-	-	-	-
	2	2	-	-	-	-	-	-	-	-	-	-	-	-	-	-	-	-	2	-	-
	9	9	-	-	-	-	-	-	-	-	5	-	-	-	-	-	-	-	3	-	1
Shipkeeper in the Marshal's Office	1	1	-	-	-	-	-	-	-	-	-	-	-	-	-	-	-	-	-	-	1
Messenger in the Marshal's Office	1	1	-	-	-	1	-	-	-	-	-	-	-	-	-	-	-	-	-	-	-

HIGH COURT OF JUSTICE, IRELAND:																								
CHANCERY DIVISION:—																								
Clerk in Land Judges Office	-	1	1	-	-	-	-	-	-	-	-	-	-	-	-	-	-	-	-	-	-	-	1	
QUEEN'S BENCH DIVISION:—																								
Clerks	- - - -	2	2	-	-	-	-	-	-	-	1	-	-	-	-	-	-	-	-	1	-	-	-	
HOME OFFICE:—																								
Queen's Messengers	- -	2	2	-	-	-	-	-	-	-	-	-	-	-	-	-	-	-	-	2	-	-	-	
Porters	- - -	2	2	-	-	-	-	-	-	-	-	-	-	-	-	-	-	-	-	2	-	-	-	
INDIA AUDIT OFFICE:—																								
Clerks	- - - -	46	-	-	46	-	9	-	-	-	-	-	17	9	8	-	-	8	-	-	-	-	-	
INDIA OFFICE:—																								
Second Class Clerks	- -	32	32	-	-	-	-	-	-	-	-	5	-	-	-	-	-	-	-	-	23	4	-	
Book-keepers	- - -	31	-	-	31	-	7	-	-	-	-	-	5	5	6	-	-	-	1	-	-	-	-	
Messengers -	- - -	4	4	-	-	-	1	-	-	-	-	1	-	-	-	-	-	-	-	2	-	-	-	
Labourers in the Stores Department.		1	1	-	-	-	-	-	-	-	-	-	-	-	-	-	-	-	-	1	-	-	-	
SERVICES IN INDIA:—																								
Candidates for the Civil Service of India:—																								
		76	-	-	76	-	6	-	-	-	1	-	-	-	56	-	-	-	13	-	-	-	-	
	8	141	-	-	141	-	7	-	-	-	-	-	-	-	121	-	-	-	13	-	-	-	-	
		115	-	-	115	-	-	-	-	-	-	-	-	-	-	115	-	-	-	-	-	-	-	
		30	-	-	30	-	-	-	-	-	-	-	-	-	-	-	-	-	30	-	-	-	-	
		114	-	-	114	-	5	-	-	-	1	-	-	-	74	34	-	-	-	-	-	-	-	
		27	-	-	27	-	15	-	-	-	-	-	-	-	6	3	-	-	-	-	-	-	-	
		31	-	31	-	-	1	-	-	-	-	-	-	-	25	5	-	-	-	-	-	-	-	
INLAND																								
	3	1	-	-	1	-	-	-	-	-	-	-	-	-	-	-	-	-	1	-	-	-	-	
		17	-	-	17	-	3	-	-	-	-	-	-	-	7	-	-	-	3	-	-	-	-	
		6	-	3	3	-	-	-	-	-	-	-	-	-	-	-	3	-	-	-	1	2	-	
		2,254	-	-	2,254	-	296	3	3	1	1	-	-	-	1,070	-	-	-	185	-	-	796	-	
		15	15	-	-	-	-	-	-	-	-	-	-	-	-	-	-	-	-	15	-	-	-	
KILMAINHAM HOSPITAL:—																								
Nurse	- - - -	3	3	-	-	-	-	-	-	-	-	1	-	-	-	-	-	-	-	2	-	1	-	
LAND REGISTRY OFFICE:—																								
Housekeeper	- - -	2	2	-	-	-	-	1	-	-	-	-	-	-	-	-	-	-	-	-	1	-	-	

TABLE A. (*continued*), showing for each DEPARTMENT the NUMBER of CASES dealt with in the year from January 1, 1878, to December 31, 1878, and the manner in which the cases decided in the same period have been disposed of.

Number of Cases dealt with.					Number of Persons															
															For whom Certificates were granted.					
															After Open Competition or Open Selection.					
[illegible]	Of Candidates nominated singly.	Of Candidates nominated to compete.	Of Candidates at Open Competitions.	Of Candidates to be registered as Copyists and Messengers.	Who declined, withdrew, or were absent.	Who were not within the limits of AGE.	Whose HEALTH was not satisfactory.	Whose CHARACTER was not satisfactory.	Who were excluded by Departments for other reasons or for reasons not mentioned.	Who were REJECTED on Examination.	Who FAILED in Preliminary Examinations.	Who PASSED the Preliminary Examination.	Who were UNSUCCESSFUL in Competition.	For whom Certificates were not required.	Under Scheme I.	For Lower Division.	Under Special Regulations.	After Nomination.	Under Clause VII. of the O. in C. of 4 June 1870.	Yet to appear, or still under Consideration.
1	1	-	-	-	-	-	-	-	-	-	-	-	-	-	-	-	-	1	-	-
1	1	-	-	-	-	-	-	-	-	1	-	-	-	-	-	-	-	-	-	-
1	1	-	-	-	-	-	-	-	1	-	-	-	-	-	-	-	-	-	-	-
2	2	-	-	-	-	-	-	-	2	-	-	-	-	-	-	-	-	-	-	-
1	1	-	-	-	-	-	-	-	-	-	-	-	-	-	-	-	-	1	-	-
1	1	-	-	-	-	-	-	-	-	-	-	-	-	-	-	-	-	-	1	-
1	1	-	-	-	-	-	-	-	-	-	-	-	-	-	-	-	-	1	-	-
1	1	-	-	-	-	-	-	-	-	-	-	-	-	-	-	-	-	1	-	-
2	2	-	-	-	-	-	-	-	-	-	-	-	-	-	-	-	-	2	-	-
1	1	-	-	-	-	-	-	-	-	-	-	-	-	-	-	-	-	1	-	-
1	1	-	-	-	-	-	-	-	-	-	-	-	-	-	-	-	-	1	-	-
1	1	-	-	-	-	-	-	-	-	-	-	-	-	-	-	-	-	1	-	-

TABLE A. (*continued*), showing for each DEPARTMENT the NUMBER of CASES dealt with in the year from January 1, 1878, to December 31, 1878, and the manner in which the cases decided in the same period have been disposed of.

	Number of Cases dealt with.					Number of Persons															
																For whom Certificates were granted.					
																After Open Competition or Open Selection.					
	General Total.	Of Candidates nominated singly.	Of Candidates nominated to compete.	Of Candidates at Open Competitions.	Of Candidates to be registered as Copyists and Messengers.	Who declined, withdrew, or were absent.	Who were not within the limits of AGE.	Whose HEALTH was not satisfactory.	Whose CHARACTER was not satisfactory.	Who were excluded by Departments for other reasons or for reasons not mentioned.	Who were REJECTED on Examination.	Who FAILED in Preliminary Examinations.	Who PASSED the Preliminary Examination.	Who were UNSUCCESSFUL in Competition.	For whom Certificates were not required.	Under Scheme I.	For Lower Division.	Under Special Regulations.	After Nomination.	Under Clause VII. of the O. in C. of 4 June 1870.	Yet to appear, or still under Consideration.
POST OFFICE—*cont.*																					
Female Clerks	102	5	97	–	–	14	5	3	–	2	–	–	–	31	–	–	–	–	21	5	21
Counterwomen and Female Returners.	39	3	36	–	–	6	–	1	–	1	–	–	–	9	–	–	–	–	9	1	3
Assistant to Medical Officers	1	1	–	–	–	–	–	–	–	–	–	–	–	–	–	–	–	–	–	1	–
[illegible]	1	1	–	–	–	–	–	–	–	–	–	–	–	–	–	–	–	–	–	1	–
[illegible]	46	42	4	–	–	1	1	–	–	1	6	–	–	2	–	–	–	–	33	–	1
[illegible], Dublin,	280	280	–	–	–	41	11	36	–	11	38	–	–	–	–	–	–	–	130	–	14
[illegible])	280	276	4	–	–	8	9	7	–	1	13	–	–	2	–	–	–	–	226	–	15
[illegible]	16	5	11	–	–	2	–	–	–	–	–	–	–	4	–	–	–	–	10	–	–
[illegible]	388	326	62	–	–	19	8	14	1	9	21	–	–	17	–	–	–	–	280	–	26
[illegible]	3	3	–	–	–	–	–	–	–	–	–	–	–	–	–	–	–	–	3	–	–
[illegible]tresses	33	33	–	–	–	–	–	–	–	–	1	–	–	–	–	–	–	–	23	7	2
[illegible]	532	532	–	–	–	5	3	–	2	1	72	–	–	–	–	–	–	–	420	–	29
[illegible]	5	5	–	–	–	–	–	–	–	–	1	–	–	–	–	–	–	–	3	–	1
[illegible] than	969	969	–	–	–	10	4	3	15	4	25	–	–	–	–	–	–	–	841	1	66
Rural Messengers	136	136	–	–	–	3	2	1	–	2	8	–	–	–	–	–	–	–	120	–	–
TELEGRAPH DEPARTMENT:—																					
Telegraphist	1	1	–	–	–	–	–	–	–	–	–	–	–	–	–	–	–	–	–	1	–
Telegraph Learners	591	591	–	–	–	48	1	22	–	4	139	–	–	–	–	–	–	–	307	–	70
Linemen	28	28	–	–	–	–	–	–	–	–	3	–	–	–	–	–	–	–	22	–	3
PRISONS DEPARTMENT (ENGLAND):—																					
Secretary	1	1	–	–	–	–	–	–	–	–	–	–	–	–	–	–	–	–	–	1	–
Clerks	59	–	59	–	–	4	–	–	–	–	–	–	–	39	–	–	–	–	13	–	3
Schoolmasters and Schoolmistresses.	5	5	–	–	–	1	1	–	–	–	–	–	–	–	–	–	–	–	–	3	–
Compounders	5	5	–	–	–	1	1	–	–	1	–	–	–	–	–	–	–	–	–	3	–

(ENG-																					
of Works	3	3	-	-	-	-	-	-	-	-	1	-	-	-	-	-	-	-	1	-	1
-	2	2	-	-	-	-	-	-	-	-	-	-	-	-	-	-	-	-	2	-	-
-	62	62	-	-	-	11	2	2	-	3	3	-	-	-	-	-	-	-	35	-	2
Division I.	352	353	-	-	-	53	7	9	6	18	11	-	-	-	-	-	-	-	198	-	56
Division II.	60	60	-	-	-	11	-	-	1	9	8	-	-	-	-	-	-	-	30	-	6
Constables, Western Australia.	3	3	-	-	-	-	-	-	-	-	-	-	-	-	-	-	-	-	3	-	-
PRISONS BOARD (SCOTLAND):—																					
Secretary	1	1	-	-	-	-	-	-	-	-	-	-	-	-	-	-	-	-	-	1	-
Draftsman	1	1	-	-	-	-	-	-	-	-	-	-	-	-	-	-	-	-	-	-	1
Messenger in Commissioners' Office.	1	1	-	-	-	-	-	-	-	-	-	-	-	-	-	-	-	-	1	-	-
Clerk, Perth Prison	1	1	-	-	-	-	-	-	-	-	-	-	-	-	-	-	-	-	1	-	-
PRISONS DEPARTMENT (IRELAND):—																					
Clerk in Office of Directors	1	1	-	-	-	-	-	-	-	-	-	-	-	-	-	-	-	-	-	1	-
Class Matron in School	1	1	-	-	-	-	-	-	-	-	-	-	-	-	-	-	-	-	1	-	-
Warders	49	49	-	-	-	3	3	-	3	2	2	-	-	-	-	-	-	-	26	-	11
Assistant Matrons and Hospital Nurses.	17	17	-	-	-	-	1	-	1	-	1	-	-	-	-	-	-	-	12	-	2
PUBLIC WORKS LOAN OFFICE:—																					
Porter	2	2	-	-	-	-	1	-	-	-	-	-	-	-	-	-	-	-	-	-	1
PUBLIC WORKS OFFICE (IRE-																					
and	1	1	-	-	-	-	-	-	-	-	-	-	-	-	-	-	-	-	1	-	-
ige at																					
-	1	1	-	-	-	-	-	-	-	-	-	-	-	-	-	-	-	-	1	-	-
-	1	1	-	-	-	-	-	-	-	-	-	-	-	-	-	-	-	-	1	-	-
-	12	-	12	-	-	3	1	-	-	-	-	-	-	4	-	-	-	-	4	-	-
RECORD OFFICE (ENGLAND):—																					
Clerks	2	-	-	2	-	-	-	-	-	-	-	-	-	-	-	2	-	-	-	-	-
Workmen	6	6	-	-	-	-	1	-	-	-	-	-	-	-	-	-	-	-	5	-	-
RECORD OFFICE (IRELAND):—																					
Clerk	1	-	-	1	-	-	-	-	-	-	-	-	-	-	-	1	-	-	-	-	-
REGISTRAR GENERAL'S OFFICE (ENGLAND):—																					
Assistant Porters	4	4	-	-	-	-	-	-	-	-	2	-	-	-	-	-	-	-	2	-	-
Search Room Attendant	1	1	-	-	-	-	-	-	-	-	-	-	-	-	-	-	-	-	1	-	-
REGISTRAR GENERAL'S OFFICE (IRELAND):—																					
Third Class Clerk	1	1	-	-	-	-	-	-	-	-	-	-	-	-	-	-	-	-	-	1	-
Fourth Class Clerk	1	1	-	-	-	-	-	-	-	-	-	-	-	-	-	-	-	-	-	1	-
Housekeeper	1	1	-	-	-	-	-	-	-	-	-	-	-	-	-	-	-	-	-	1	-
Messenger	1	1	-	-	-	-	-	-	-	-	-	-	-	-	-	-	-	-	-	1	-

TABLE A. (*continued*), showing for each DEPARTMENT the NUMBER of CASES dealt with in the year from January 1, 1878, to December 31, 1878, and the manner in which the cases decided in the same period have been disposed of.

Number of Cases dealt with.				Number of Persons															
														For whom Certificates were granted.					
														After Open Competition or Open Selection.					
Of Candidates nominated singly.	Of Candidates nominated to compete.	Of Candidates at Open Competitions.	Of Candidates to be registered as Copyists and Messengers.	Who declined, withdrew, or were absent.	Who were not within the limits of AGE.	Whose HEALTH was not satisfactory.	Whose CHARACTER was not satisfactory.	Who were excluded by Departments for other reasons or for reasons not mentioned.	Who were REJECTED on Examination.	Who FAILED in Preliminary Examinations.	Who PASSED the Preliminary Examination.	Who were UNSUCCESSFUL in Competition.	For whom Certificates were not required.	Under Scheme 1.	For Lower Division.	Under Special Regulations.	After Nomination.	Under Clause VII. of the O. in C. of 4 June 1870.	Yet to appear, or still under Consideration.
1	-	-	-	-	-	-	-	-	-	-	-	-	-	-	-	-	-	-	1
1	-	-	-	-	-	-	-	-	-	-	-	-	-	-	-	-	-	1	-
1	-	-	-	-	-	-	-	-	-	-	-	-	-	-	-	-	-	-	1
1	-	-	-	-	-	-	-	-	-	-	-	-	-	-	-	-	-	-	1
8	-	-	-	1	-	-	-	-	2	-	-	-	-	-	-	-	4	-	1
	-	-	-	-	1	-	-	-	-	-	-	-	-	-	-	-	-	-	-
1	-	-	-	-	-	-	-	-	-	-	-	-	-	-	-	-	-	1	-
2	-	-	-	-	-	-	-	-	-	-	-	-	-	-	-	-	-	2	-
1	-	-	-	-	-	-	-	-	-	-	-	-	1	-	-	-	-	-	-
1	-	-	-	-	-	-	-	-	-	-	-	-	1	-	-	-	-	-	-
1	-	-	-	-	-	-	-	-	-	-	-	-	-	-	-	-	1	-	-
1	-	-	-	-	-	-	-	-	-	-	-	-	-	-	-	-	1	-	-

TEMPORARY COMMISSIONS—*cont.*																									
CRIMINAL CODE BILL COMMISSION :—																									
Clerk	1	1																							
Messengers	2	2											1									1			
ENDOWED INSTITUTIONS (SCOTLAND) COMMISSION :—																									
Clerk	1	1																				1			
Officekeeper	1	1											1												
OXFORD UNIVERSITY COMMISSION :—																									
Messengers	2	2	-	-	-	-	1	-	-	-	-	-	-	-	-	-	-	-	-	-	-	1	-	-	
TRADE, BOARD OF :—																									
	110	110											1										108	8	
	5	5									1														
	14	14									11														
in	2	2																				2			
the	2	2	-	-	-	-	-	-	-	-	-	-	-	-	-	-	-	-	-	-	-	1	-	1	
TREASURY :																									
Clerks	1	-	-	1	-	-	-	-	-	-	-	-	-	-	-	-	1	-	-	-	-	-	-	-	
Professional Clerk in Solicitor's Office.	6	-	-	6	-	2	-	-	-	-	-	-	-	-	2	-	-	-	1	-	-	-	-	-	
Supplementary Clerk in Solicitor's Office.	53	-	-	53	-	20	-	-	-	-	-	-	-	-	20	-	-	-	8	-	-	-	-	-	
Messengers	4	4	-	-	-	-	-	-	-	-	-	-	-	-	-	-	-	-	-	-	-	4	-	-	
WAR																									
	5	5											2										1		
	5	5																				5			
	1	1																				1			
	1	1																				1			
	1	1																					1		
	1	1																							
	4	4									1		1									2			
JUDGE ADVOCATE GENERAL'S OFFICE :—																									
Messenger	1	1	-	-	-	-	-	-	-	-	-	-	-	-	-	-	-	-	-	-	-	1	-	-	
MILITARY ENTRANCE EXAMINATIONS :—																									
ROYAL MILITARY ACADEMY :—																									
Candidates for entry	453	-	-	453	-	48	-	-	-	3	-	248	-	46	130	-	-	-	-	-	-				

TABLE A. (*continued*), showing for each DEPARTMENT the NUMBER of CASES dealt with in the year from January 1, 1878, to December 31, 1878, and the manner in which the cases decided in the same period have been disposed of.

Number of Cases dealt with.					Number of Persons															
															For whom Certificates were granted.					
															After Open Competition or Open Selection.					
General Total.	Of Candidates nominated singly.	Of Candidates nominated to compete.	Of Candidates at Open Competitions.	Of Candidates to be registered as Copyists and Messengers.	Who declined, withdrew, or were absent.	Who were not within the limits of AGE.	Whose HEALTH was not satisfactory.	Whose CHARACTER was not satisfactory.	Who were excluded by Departments for other reasons, or for reasons not mentioned.	Who were REJECTED on Examination.	Who FAILED in Preliminary Examinations.	Who PASSED the Preliminary Examination.	Who were UNSUCCESSFUL in Competition.	For whom Certificates were not required.	Under Scheme I.	For Lower Division.	Under Special Regulations.	After Nomination.	Under Clause VII. of the O. in C. of 4 June 1870.	Yet to appear, or still under Consideration.
07	–	–	1,307	–		–	–	–	–	–	647	493	–	–	–	–	–	–	–	–
63	–	–	1,463	–		–	1	–	31	–	269	–	491	206	–	–	–	–	–	363
74	–	–	74	–		–	–	–	–	–	3	–	15	24	–	–	–	–	–	34
06	106	–	–	–		–	–	–	–	5	26	–	–	37	–	–	–	–	–	39
33	333	–	–	–		–	–	–	–	41	83	1	–	73	–	–	–	–	–	74
10	–	10	–	–		–	–	–	–	–	4	–	–	6	–	–	–	–	–	–
41	–	–	41	–		–	–	–	–	–	–	–	23	–	–	–	3	–	–	–
9	–	–	9	–		–	–	–	–	–	–	–	6	–	–	–	1	–	–	–
27	–	–	27	–		–	–	–	–	–	–	–	22	–	–	–	1	–	–	–
31	–	–	31	–		–	–	–	–	–	8	8	6	–	–	–	2	–	–	–
5	5	–	–	–		–	–	–	–	1	–	–	–	–	–	–	–	4	–	–
7	7	–	–	–		1	1	–	–	–	–	–	–	–	–	–	–	5	–	–

TABLE B. Showing the NUMBERS and PARTICULARS of the COMPETITIONS disposed of in the Year from January 1, 1878, to December 31, 1878

TABLE B.—*continued.*

* In addition, 343 candidates failed in the preliminary examination.
† In addition, 916 candidates failed in the preliminary examination.
§ In addition 3 candidates failed in the preliminary examination.

TABLE B.—*continued.*

The following Competitions were in progress on 31st December 1878, but had not been finally disposed of.

Department, &c.	Number of Competitions.	Number of Situations to be competed for.	Number of Competitors.
OPEN COMPETITION FOR BOY CLERKSHIPS OF THE LOWER DIVISION.	1	29	137
ADMIRALTY:—			
Artificers for Promotion - - -	—	—	24
CONSTABULARY, ROYAL IRISH:—			
Cadets - - - - -	1	1	3
Constables for Promotion - - -	1	—	26
FACTORY INSPECTORS' DEPARTMENT:—			
Inspector of Factories and Workshops -	1	1	4
INLAND REVENUE:—			
‡Second Class Assistants of Excise -	1	—	726
MILITARY ENTRANCE EXAMINATIONS:—			
‡Candidates for entry into the Royal Military College, Sandhurst, including those eligible for West India Regiments only.	1	—	362
POST OFFICE:—			
Female Clerks - - - -	2	11	23

TABLES C. AND D.

MARKS OBTAINED IN OPEN AND LIMITED COMPETITIONS.

TABLE C.—Showing in detail the Results of Open Competitions held between 1st January and 31st December 1878.

Name or Number of Candidate, and Date of Competition.	Department and Situation to which assigned.	Date of Certificate.	English.			Greek.	Latin.	French.	German.	Italian.	Mathematics.	Natural Science.	Moral Science.	Jurisprudence.	Political Economy.	Total.
			Composition and Précis.	History.	Literature.											
Open Competition for 3 Clerkships, Class I.																
January 22, 1878.		**Maximum** -	500	500	500	750	750	375	375	375	1,250	1,000	500	375	375	7,625
Oakeshott; George Alfred.	Secretary's Office, General Post Office.	Clerk - 1878, March 8 -	231	160	—	—	—	—	—	—	451	513	—	—	179	1,514
Kearney; Elfric Leofwin.	Civil Service Commission -	Ditto - „ „ 22 -	222	111	65	292	344	0	—	—	458	—	—	—	—	1,492
No. 3 - -	[*Declined the appointment offered to him.*]	- - -	98	190	—	—	—	—	—	—	700	260	—	—	—	1,248
Salisbury; Edward -	Record Office, England - -	Clerk - 1878, March 14 -	81	220	118	165	196	62	—	—	286	—	—	—	—	1,128
No. 5 - -	- - - - - -	- - -	252	265	108	—	—	141	103	—	—	133	—	—	117	1,119
No. 6 - -	- - - - - -	- - -	290	235	38	—	—	101	178	—	—	70	—	—	155	1,067
No. 7 - -	- - - - - -	- - -	168	170	187	—	222	36	90	—	—	177	—	—	—	1,050
No. 8 - -	- - - - - -	- - -	136	171	254	125	174	0	—	—	—	—	—	35	47	942
No. 9 - -	- - - - - -	- - -	134	185	65	140	106	—	—	—	176	—	—	—	103	909
No. 10 - -	- - - - - -	- - -	15	45	55	366	380	0	—	—	0	0	0	—	37	898
No. 11 - -	- - - - - -	- - -	156	190	75	23	127	120	0	79	—	—	—	—	12	782
No. 12 - -	- - - - - -	- - -	225	156	8	—	—	0	—	—	0	24	114	96	157	780
No. 13 - -	- - - - - -	- - -	204	81	—	—	64	37	120	—	—	—	—	—	65	571
No. 14 - -	- - - - - -	- - -	116	20	74	—	0	0	140	—	—	—	—	—	—	350
No. 15 - -	- - - - - -	- - -	159	105	0	0	60	0	—	—	—	—	—	—	—	324
No. 16 - -	- - - - - -	- - -	135	51	0	0	83	0	—	—	0	—	—	—	—	269
No. 17 - -	- - - - - -	- - -	75	105	0	—	17	0	—	—	—	—	—	—	32	229
No. 18 - -	- - - - - -	- - -	60	0	0	0	8	0	—	—	121	—	—	—	—	189
No. 19 - -	- - - - - -	- - -	103	6	0	—	—	0	—	—	—	0	—	—	0	109

Table C.—Open Competitions—*continued.*

Name or Number of Candidate, and Date of Competition.	Department and Situation to which assigned.		Date of Certificate.	English.			Greek.	Latin.	French.	German.	Italian.	Mathematics.	Natural Science.	Moral Science.	Jurisprudence.	Political Economy.	Total.
				Composition and Précis.	History.	Literature.											
Open Competiton for 9 Clerkships, Class I.																	
April 9, 1878.			**Maximum** -	500	500	500	750	750	375	375	375	1,250	1,000	500	375	375	7,625
Spring-Rice; Stephen Edward.	Treasury - - -	Clerk -	1878, June 3 -	145	249	203	444	436	—	—	—	586	220	—	—	—	2,283
Just; Hartmann Wolfgang.	Colonial Office - - -	Ditto -	„ „ 3 -	155	127	265	459	427	4	218	—	29	—	171	—	82	1,937
No. 3 - -	[*Declined the appointment offered to him.*]	- - -	- - -	195	187	147	454	406	1	—	—	—	—	157	—	81	1,628
No. 4 - -	[*Ditto*] - - -	- -	- - -	160	281	156	506	483	—	—	—	—	—	—	11	—	1,597
Hollway; Henry Calthrop.	Record Office (England) -	Clerk -	1878, June 5 -	275	124	63	428	368	99	—	—	—	—	81	—	69	1,507
No. 6 - -	[*Declined the appointment offered to him.*]	- - -	- - -	150	69	86	488	435	0	—	—	—	—	201	—	31	1,440
Weir; Henry Crichton.	Record Office (Ireland) - -	Clerk -	1878, July 3 -	170	169	115	361	330	—	—	—	—	160	—	—	—	1,305
Heath; Walter -	Patent Office - - -	Ditto -	„ June 12 -	98	45	—	341	173	0	0	—	541	89	—	—	—	1,287
No. 9 - -	[*Declined the appointment offered to him.*]	- - -	- - -	165	—	0	348	299	—	—	—	—	279	—	—	165	1,256
No. 10 - -	[*Ditto*] - - -	- -	- - -	130	138	149	398	307	3	—	—	—	—	—	2	87	1,214
No. 11 - -	[*Ditto*] - - -	- -	- - -	225	308	150	96	147	67	2	14	—	—	—	8	144	1,161
No. 12 - -	[*Ditto*] - - -	- -	- - -	120	272	136	—	96	136	177	113	39	—	—	—	44	1,133
No. 13 - -	[*Ditto*] - - -	- -	- - -	168	—	140	360	277	71	—	—	—	—	114	—	0	1,130
No. 14 - -	[*Ditto*] - - -	- -	- - -	180	215	234	—	90	81	—	86	144	—	—	0	91	1,121
Hodges; Francis William.	Patent Office - - -	Clerk -	1878, July 27	75	287	155	—	—	94	121	—	—	250	—	—	116	1,096

continued

Table C.—Open Competitions—*continued.*

Name or Number of Candidate, and Date of Competition.	Department and Situation to which assigned.		Date of Certificate.	English.			Greek.	Latin.	French.	German.	Italian.	Mathematics.	Natural Science.	Moral Science.	Jurisprudence.	Political Economy.	Total.
				Composition and Précis.	History.	Literature.											
April 9, 1878—*cont.*			**Maximum -**	500	500	500	750	750	375	375	375	1,250	1,000	500	375	375	7,625
No. 16 - -	[*Declined the appointment offered to him.*]		- - -	183	112	180	5	218	0	—	—	286	—	—	—	95	1,079
Black; John George	Inland Revenue - -	Assistant Surveyor of Taxes.	1878, July 31 -	160	145	186	0	164	112	77	96	—	—	57	—	—	997
Reynard; Robert Froding.	Ditto - - - -	Ditto -	„ Aug. 12 -	70	257	111	—	71	112	158	176	—	—	—	—	—	955
Gattie; Walter Montagu.	Ditto - - - -	Ditto -	„ „ 15 -	118	56	161	112	99	0	—	—	321	—	—	—	—	867
No. 20 - -	- - - - -	- -	- - -	105	231	168	172	151	0	—	—	—	0	—	0	0	827
No. 21 - -	- - - - -	- -	- - -	75	0	125	80	68	—	—	—	327	0	55	—	83	813
No. 22 - -	- - - - -	- -	- - -	80	70	178	122	169	0	0	92	—	—	—	—	—	711
No. 23 - -	- - - - -	- -	- - -	145	28	66	158	196	0	—	—	—	—	—	0	0	593
No. 24 - -	- - - - -	- -	- - -	115	123	169	—	64	0	—	—	0	89	—	—	—	560
No. 25 - -	- - - - -	- -	- - -	118	75	104	—	34	137	71	—	—	—	—	—	0	539
No. 26 - -	- - - - -	- -	- - -	95	—	—	150	133	33	—	—	—	—	—	—	84	495
No. 27 - -	- - - - -	- -	- - -	55	45	—	—	6	0	—	—	354	—	—	—	—	460
No. 28 - -	- - - - -	- -	- - -	88	173	88	—	0	0	0	—	0	0	—	—	—	349
No. 29 - -	- - - - -	- -	- - -	85	0	0	58	65	30	0	3	0	0	0	0	44	285
No. 30 - -	- - - - -	- -	- - -	85	32	—	0	90	0	—	—	—	—	—	0	—	216
No. 31 - -	- - - - -	- -	- - -	133	—	—	—	0	—	—	—	79	—	—	—	0	212
No. 32 - -	- - - - -	- -	- - -	55	0	75	—	16	—	—	—	—	—	—	—	—	146
No. 33 - -	- - - - -	- -	- - -	45	33	0	0	0	0	—	—	0	—	—	—	—	78

Table C.—Open Competitions—*continued.*

Name or Number of Candidate, and Date of Competition.	Department and Situation. to which assigned.		Date of Certi ficate.	English.			Greek.	Latin.	French.	German.	Italian.	Mathematics.	Natural Science.	Moral Science.	Jurisprudence.	Political Economy.	Total.
				Composition and Précis.	History.	Literature.											
Open Competition for 5 Clerkships, Class I.																	
November, 5, 1878.			**Maximum** -	500	500	500	750	750	375	375	375	1,250	1,000	500	375	375	7,625
Chambers; John -	Secretary's Office, General Post Office.	Clerk -	1879, Jan. 3 -	101	328	239	—	296	157	78	—	503	29	—	0	79	1810
No. 2. - -	[*Declined the appointment offered to him.*]	- -	-	194	86	69	439	463	120	98	—	0	—	—	—	—	1469
Podmore; Frank -	Secretary's Office, General Post Office.	Clerk -	1878, Dec. 31 -	123	—	—	413	383	—	—	—	—	295	—	—	114	1328
Kirkwood; Walter Guy Coffin.	Ditto - - - -	Ditto -	1879, Jan. 21 -	99	277	185	152	293	—	—	—	—	281	—	—	9	1296
Brodie; Robert Henry.	Record Office (England) -	Ditto -	1879, March 1 -	47	231	60	—	195	—	—	—	672	0	—	—	28	1233
Moline; Edgar Robert.	Record Office (Ireland) -	Ditto -	1879, March 1	62	26	79	414	403	—	165	—	71	—	—	—	0	1220
No. 7 - - -	- - - - - -	- -	- - -	71	—	35	386	331	59	—	—	0	—	59	—	—	941
No. 8 - - -	- - - - - -	- -	- - -	162	161	62	—	47	70	142	—	38	0	—	0	57	739
No. 9 - - -	- - - - - -	- -	- - -	129	208	16	—	25	33	—	—	80	0	—	—	15	506
No. 10 - -	- - - - - -	- -	- - -	168	178	62	—	—	0	—	60	30	—	—	—	—	498
No. 11 - -	- - - - - -	- -	- - -	125	84	0	—	203	—	—	—	—	0	—	—	54	466
No. 12 - -	- - - - - -	- -	- - -	18	0	0	—	83	103	—	—	101	0	—	—	—	305
No. 13 - -	- - - - - -	- -	- - -	0	35	0	—	—	—	—	—	—	0	—	0	—	35

Table C.—Open Competitions—*continued.*

Name or Number of Candidate, and Date of Competition.	Date of Certificate.	Arithmetic.	Compound Addition.	Orthography.	Handwriting.	Copying Manuscript.	Indexing.	Digest of Returns into Summaries.	English Composition.	Geography.	English History.	Book-keeping.	Total.
Open Competition for 68 Men Clerkships in the Lower Division of the Civil Service.													
May 21, 1878.	**Maximum** -	**300**	**100**	**400**	**400**	**200**	**200**	**200**	**200**	**200**	**200**	**200**	**2600**
Tripp; G. H. - - - -	1878, July 25	265	99	390	270	170	152	177	189	127	152	135	2126
Folkard; W. W. - - -	„ „ 30	177	99	399	320	130	121	180	133	157	175	150	2041
Grout; E. W. - - - -	„ Aug. 1	237	99	390	280	190	126	176	92	148	147	147	2032
Binet; A. W. - - - -	„ July 31	250	88	400	320	150	119	158	144	147	122	106	2004
Hawkins; P. I. - - -	„ Aug. 13	196	97	390	380	180	125	163	167	119	81	105	2003
Skipper; F. J. - - -	„ „ 3	240	96	360	320	190	134	193	120	90	82	158	1983
Durrant; W. S. - - -	„ July 31	240	92	390	280	190	109	175	143	114	105	123	1961
Bennett; C. E. - - -	„ „ 26	215	100	360	300	190	97	177	134	120	131	127	1951
Baker; W. - - - -	„ Aug. 7	204	99	395	280	160	84	176	144	155	147	103	1947
Sayers; C. R. - - -	1879, Feb. 7	248	95	400	330	190	108	156	120	75	112	112	1946
Bowser; J. E. - - - -	1878, Aug. 8	247	88	390	280	180	116	171	168	104	96	105	1945
No. 12 [*Ineligible, not having obtained the permission of his Department to compete*].	- - -	254	92	378	300	170	93	146	131	107	122	142	1985
Buxton; H. - - - -	1878, July 30	228	90	390	300	125	141	181	167	66	102	130	1920
Langston; F. W. - - -	„ Aug. 8	255	92	390	290	200	132	167	130	79	74	110	1919
Rainbott, W. J. - - -	„ July 30	178	97	390	260	190	139	168	126	118	133	119	1918

Smith; A. - - - -	1878, Aug.	12	227	96	375	280	190	131	154	86	124	124	128	1915
Houghton; W. - - -	„ „	1	167	99	370	320	190	133	166	135	127	89	117	1913
Greig; F. J. - - - -	„ July	30	260	96	390	300	190	120	176	94	93	61	130	1910
Naish; E. J. - - -	„ Aug.	1	164	100	398	320	190	121	176	109	103	100	125	1906
Armstrong; E. W. - - -	„ July	30	143	65	370	290	200	150	151	168	147	124	96	1904
Jonas; E. E. W. - - -	„ „	26	178	99	395	270	180	114	166	132	122	120	117	1893
Harvey; W. - - - -	„ „	26	207	100	390	280	160	102	170	117	117	130	112	1885
Hicks; H. E. - - - -	„ Aug.	1	162	99	400	360	200	120	158	105	113	77	90	1884
Stoneham; E. C. - - -	„ „	6	236	95	330	290	200	114	159	95	120	102	139	1880
Miller; P. - - - -	„ „	19	223	99	370	280	180	105	145	120	124	115	117	1878
Steet; C. H. - - - -	„ July	30	264	84	400	210	190	108	101	120	156	131	113	1877
Gregg, M. - - - -	„ Aug.	7	242	100	360	280	120	93	161	138	124	145	113	1876
Kelly; M. - - - -	„ „	7	259	89	398	300	120	101	126	108	134	128	109	1872
Piper; G. - - - -	„ „	6	218	93	330	270	180	103	152	156	118	114	137	1871
Collins; J. - - - -	„ „	20	190	100	390	300	160	127	142	107	132	104	118	1870
Nash; R. E. - - - -	„ „	13	253	71	350	300	180	118	181	142	98	56	120	1869
Howe; J. E. - - - -	„ July	27	278	84	400	260	200	98	151	124	114	53	105	1868
Northwood; A. - - -	„ Aug.	14	166	99	370	300	170	133	142	123	146	78	140	1867
Dingle; R. W. - - -	„ July	27	237	97	370	300	150	138	179	123	50	46	163	1853
Danter; F. W. - - -	„ „	31	149	63	390	340	125	61	140	165	161	133	119	1846
Edwards; S. - - - -	„ „	30	228	97	380	280	170	107	163	92	81	107	136	1841
O'Sullivan; M. - - -	„ Aug.	20	188	95	395	330	130	103	146	130	110	111	94	1832
Emm; W. - - - -	„ „	6	258	89	398	290	160	99	154	113	141	108	20	1830
Bugby; A. - - - -	„ July	31	246	82	400	300	160	105	157	147	81	64	84	1826
Westlake; R. H. - - -	„ Aug.	6	177	93	380	280	190	121	183	140	84	73	104	1825
No. 41 [*Declined the situation offered to him*].	- - -		209	91	360	300	140	109	127	105	128	117	138	1824
Eyles, A. - - - - -	1878, July	31	163	97	360	320	150	126	186	110	117	100	94	1823
Skerry; G. E. - - - -	„ „	31	234	96	340	280	190	129	179	117	108	49	100	1822
Wilson; R. W. - - -	„ „	27	243	91	340	270	150	116	165	87	136	119	101	1818
Poulton; T. H. M. - - -	„ Aug.	8	200	89	395	340	190	101	174	120	52	74	78	1813
Boyle; W. A. - - - -	„ „	9	146	77	380	350	180	94	140	127	114	76	123	1807
Major; A. F. - - - -	„ „	9	159	69	395	280	160	123	159	175	90	127	59	1796
Lake; R. S. - - - -	„ „	8	206	89	370	280	170	86	127	147	111	89	117	1792
Robinson; T. E. - - -	„ July	27	183	68	400	260	200	104	161	144	82	101	86	1789
Hobbs; A. O. - - - -	„ „	27	253	79	315	260	200	114	174	91	77	93	119	1775

continued

Table C.—Open Competitions—*continued.*

Name or Number of Candidate, and Date of Competition.	Date of Certificate.	Arithmetic.	Compound Addition.	Orthography.	Handwriting.	Copying Manuscript.	Indexing.	Digest of Returns into Summaries.	English Composition.	Geography.	English History.	Book-keeping.	Total.
May 21, 1878—*cont.*	**Maximum** -	**300**	**100**	**400**	**400**	**200**	**200**	**200**	**200**	**200**	**200**	**200**	**2600**
Corbitt; W. - - - -	1878, July 27	258	91	375	300	140	123	100	85	113	82	107	1774
Andersen; J. - - - -	„ Aug. 17	197	84	395	290	133	91	150	109	98	82	138	1767
Hunt; F. W. - - - -	„ „ 2	147	97	315	280	170	79	177	133	143	124	101	1766
Deer; E. J. - - - -	„ July 31	194	95	370	320	190	85	164	138	46	55	104	1761
Harris; W. T. - - - -	„ Aug. 6	178	85	378	290	143	87	160	105	107	99	118	1750
Evans; W. J. - - - -	„ July 30	138	95	360	270	190	117	152	124	84	70	148	1748
Purchase; A. H. - - -	„ Aug. 6	147	99	370	290	140	100	169	101	100	94	135	1745
Sherrington; J. W. H. - -	„ July 26	185	99	355	260	180	137	179	86	91	67	105	1744
Pelly; G. K. - - - -	„ Sept. 12	189	85	370	290	160	101	134	135	92	92	95	1743
Ogle; C. R. - - - -	„ Aug. 1	175	82	360	260	140	109	153	125	111	114	113	1742
Kelley; W. - - - -	„ „ 1	161	95	370	280	120	117	146	124	114	116	98	1741
Davy; F. F. - - - -	„ July 27	149	85	350	340	190	126	167	103	50	64	116	1740
Wylie, R. - - - -	„ Aug. 28	212	97	395	260	130	93	138	93	87	89	145	1739
Williams; C. F. - - -	„ July 27	207	75	395	260	170	122	117	120	64	80	128	1738
Innes; W. - - - -	„ Aug. 6	225	95	360	260	180	49	158	96	102	107	105	1737
Kennedy; T. E. - - -	„ July 30	188	92	300	280	170	104	167	105	133	89	108	1736
West; H. T. - - - -	„ Aug. 2	177	100	350	240	170	91	181	126	97	99	104	1735
Fitzgerald; E. - - - -	„ Sept. 9	142	99	398	260	150	120	159	85	151	105	65	1734
No. 69 - - - - -	- - -	233	94	380	300	93	80	118	79	119	115	122	1733
No. 70 - - - - -	- - -	149	88	390	260	123	90	163	133	113	105	117	1731
No. 71 - - - - -	- - -	181	99	330	340	165	57	165	123	56	73	139	1728
No. 72 - - - - -	- - -	195	64	400	280	80	103	129	136	113	100	124	1724
No. 73 - - - - -	- - -	224	100	330	280	200	94	170	100	79	75	71	1723

No. 74	233	95	392	270	30	94	136	105	165	119	82	1721
No. 75	146	99	360	270	180	116	154	106	111	73	105	1720
No. 76	215	99	395	260	140	110	163	112	40	81	101	1716
No. 77	180	100	360	320	150	105	166	88	72	69	105	1715
No. 78	146	88	320	260	200	102	132	113	128	127	95	1711
No. 79	112	99	370	320	140	73	176	112	131	85	92	1710
	166	91	370	330	180	118	89	129	52	60	125	1710
No. 81	141	86	395	270	170	99	159	137	51	84	115	1707
	192	100	375	250	190	112	141	147	68	31	101	1707
No. 83	218	92	395	220	175	76	133	111	98	75	106	1699
	187	59	370	240	170	109	137	100	103	117	107	1699
No. 85	182	92	390	260	120	98	151	111	93	103	98	1698
No. 86	165	65	370	280	180	90	78	134	133	118	77	1690
No. 87	187	91	380	300	190	66	152	114	107	65	85	1687
No. 88	144	95	330	280	173	76	147	115	124	121	80	1685
No. 89	157	86	398	320	180	117	161	112	60	25	66	1682
No. 90	126	84	350	290	170	125	142	119	93	76	105	1680
No. 91	231	95	385	300	18	93	87	151	115	106	98	1679
	149	100	395	260	190	94	182	98	62	33	116	1679
	194	82	360	260	140	99	99	123	125	96	101	1679
No. 94	191	100	370	270	180	85	161	99	64	44	114	1678
No. 95	136	90	330	260	60	117	142	168	107	142	125	1677
No. 96	94	66	340	300	190	106	166	85	107	105	116	1675
No. 97	225	97	390	250	80	90	123	116	90	110	103	1674
	158	66	390	300	190	95	157	118	71	37	92	1674
No. 99	213	91	370	260	175	98	156	113	89	18	136	1669
No. 100	228	97	300	290	165	101	156	83	59	83	106	1668
No. 101	166	94	370	280	180	119	160	84	64	50	100	1667
	202	40	380	260	200	106	154	139	54	53	79	1667
No. 103	161	93	350	290	190	98	154	103	74	62	88	1663
No. 104	134	92	400	320	180	84	144	73	90	35	106	1658
No. 105	172	99	305	280	120	98	146	130	99	112	93	1654
No. 106	144	96	398	290	150	95	139	100	83	79	78	1652
	210	92	370	200	180	95	152	82	91	100	80	1652
No. 108	145	78	325	280	180	65	123	136	142	117	60	1651
No. 109	148	89	300	300	200	134	161	91	86	31	107	1647

continued

Table C.—Open Competitions—*continued.*

Name or Number of Candidate, and Date of Competition.	Date of Certificate.	Arithmetic.	Compound Addition.	Orthography.	Handwriting.	Copying Manuscript.	Indexing.	Digest of Returns into Summaries.	English Composition.	Geography.	English History.	Book-keeping.	Total.
May 21, 1878—*cont.*	**Maximum** -	**300**	**100**	**400**	**400**	**200**	**200**	**200**	**200**	**200**	**200**	**200**	**2600**
No. 110 - - - - -	- - -	175	67	370	280	85	99	133	142	102	86	107	1646
No. 111 - - - - -	- - -	101	66	380	365	190	107	128	159	72	47	30	1645
	- - -	209	99	280	320	63	133	176	137	40	42	146	1645
	- - -	212	96	370	220	65	121	142	127	81	67	142	1643
No. 113 - - - - -	- - -	204	96	340	250	150	94	174	106	53	77	99	1643
	- - -	181	93	350	300	190	108	175	94	12	10	130	1643
	- - -	152	89	395	270	95	82	90	131	106	127	104	1641
No. 116 - - - - -	- - -	145	84	380	320	133	63	155	119	68	87	87	1641
	- - -	97	100	390	270	190	122	160	125	55	46	86	1641
No. 119 - - - - -	- - -	177	78	340	270	160	90	117	105	75	118	109	1639
No. 120 - - - - -	- - -	146	67	390	300	120	78	119	109	92	91	125	1637
No. 121 - - - - -	- - -	162	99	340	240	160	132	122	74	96	94	114	1633
No. 122 - - - - -	- - -	194	77	390	270	115	92	120	89	84	94	107	1632
No. 123 - - - - -	- - -	131	75	340	320	180	102	138	117	67	71	95	1631
	- - -	157	96	320	280	180	76	176	119	58	61	108	1631
No. 125 - - - - -	- - -	106	97	350	270	170	80	153	96	82	115	110	1629
No. 126 - - - - -	- - -	172	92	380	260	150	84	171	97	65	63	85	1619
No. 127 - - - - -	- - -	152	100	370	270	170	98	157	72	53	45	130	1617
No. 128 - - - - -	- - -	76	99	370	300	190	76	156	92	94	58	105	1616
No. 129 - - - - -	- - -	182	91	350	240	100	92	131	117	78	109	123	1613
No. 130 - - - - -	- - -	185	99	320	260	98	97	175	106	71	74	127	1612
No. 131 - - - - -	- - -	143	95	355	260	180	104	159	108	70	44	89	1607
	- - -	180	97	370	240	150	70	139	83	107	69	102	1607

No. 133	-	-	-	-	-	-	-	-	180	92	240	260	170	129	125	139	75	78	123	1606
No. 134	-	-	-	-	-	-	-	-	166	93	340	280	118	94	151	99	82	63	117	1603
						-	-	-	210	99	397	280	50	62	131	107	76	104	87	1603
No. 136	-	-	-	-	-	-	-	-	141	81	360	270	135	82	142	114	100	78	98	1601
No. 137	-	-	-	-	-	-	-	-	86	85	398	280	180	99	142	80	57	95	96	1598
No. 138	-	-	-	-	-	-	-	-	175	96	390	280	110	78	130	97	102	77	61	1596
No. 139	-	-	-	-	-	-	-	-	166	72	280	320	20	92	142	134	122	119	128	1595
						-	-	-	140	91	300	270	120	56	137	106	184	126	115	1595
No. 141	-	-	-	-	-	-	-	-	248	96	280	240	120	105	158	97	59	86	105	1594
No. 142	-	-	-	-	-	-	-	-	204	95	390	200	140	107	134	79	185	91	18	1593
No. 143	-	-	-	-	-	-	-	-	148	86	360	210	160	57	111	156	103	112	88	1591
No. 144	-	-	-	-	-	-	-	-	179	72	360	260	125	96	130	114	74	82	98	1590
No. 145	-	-	-	-	-	-	-	-	128	92	350	290	123	77	179	117	67	14	151	1588
No. 146	-	-	-	-	-	-	-	-	103	95	350	250	95	118	152	140	78	107	104	1587
No. 147	-	-	-	-	-	-	-	-	163	99	310	260	150	103	153	68	97	82	100	1585
No. 148	-	-	-	-	-	-	-	-	142	89	350	270	0	120	156	145	97	121	98	1583
No. 149	-	-	-	-	-	-	-	-	105	84	380	280	180	82	126	133	97	85	78	1580
						-	-	-	97	78	380	270	110	86	125	99	112	115	108	1580
No. 151	-	-	-	-	-	-	-	-	190	49	385	290	140	40	105	94	106	97	82	1578
No. 152	-	-	-	-	-	-	-	-	123	97	340	260	140	96	172	95	76	48	128	1575
No. 153	-	-	-	-	-	-	-	-	148	84	400	250	180	119	132	83	87	70	20	1573
No. 154	-	-	-	-	-	-	-	-	128	72	320	290	160	75	107	163	86	89	82	1572
No. 155	-	-	-	-	-	-	-	-	126	86	300	260	160	102	133	125	109	68	100	1569
No. 156	-	-	-	-	-	-	-	-	133	92	398	300	180	92	138	139	53	40	0	1565
						-	-	-	213	100	320	260	130	110	143	108	41	47	93	1565
No. 158	-	-	-	-	-	-	-	-	172	100	350	260	83	89	139	96	103	90	82	1564
No. 159	-	-	-	-	-	-	-	-	69	92	340	320	140	88	118	115	101	93	84	1560
No. 160	-	-	-	-	-	-	-	-	134	76	360	260	163	64	88	111	106	99	93	1554
No. 161	-	-	-	-	-	-	-	-	161	85	350	260	200	102	128	85	55	33	94	1553
No. 162	-	-	-	-	-	-	-	-	103	100	320	280	170	77	160	110	58	70	104	1552
						-	-	-	86	85	320	320	190	90	133	86	80	71	90	1551
No. 163	-	-	-	-	-	-	-	-	203	96	350	270	78	76	118	101	109	100	50	1551
						-	-	-	146	97	340	300	80	95	131	124	82	79	77	1551
No. 166	-	-	-	-	-	-	-	-	115	77	350	290	115	116	163	144	48	55	77	1550
						-	-	-	185	74	340	260	150	87	122	70	72	80	110	1550
No. 168	-	-	-	-	-	-	-	-	66	59	397	270	160	134	99	164	81	85	34	1549

continued

Table C.—Open Competitions—*continued.*

Name or Number of Candidate, and Date of Competition.	Date of Certificate.	Arithmetic.	Compound Addition.	Orthography.	Handwriting.	Copying Manuscript.	Indexing.	Digest of Returns into Summaries.	English Composition.	Geography.	English History.	Book-keeping.	Total.
May 21, 1878—*cont.*	**Maximum** -	**300**	**100**	**400**	**400**	**200**	**200**	**200**	**200**	**200**	**200**	**200**	**2600**
No. 169 - - - - -	- - -	129	89	320	240	150	95	127	182	76	78	61	1547
	- - -	251	91	340	240	130	99	137	81	60	42	76	1547
	- - -	96	87	380	280	120	111	125	105	86	60	97	1547
No. 172 - - - - -	- - -	211	92	300	250	80	142	115	104	67	82	108	1546
No. 173 - - - - -	- - -	85	85	390	300	100	79	131	139	86	41	109	1545
No. 174 - - - - -	- - -	172	82	370	260	18	106	142	96	81	92	124	1543
No. 175 - - - - -	- - -	144	99	330	240	30	86	119	82	156	132	123	1541
	- - -	126	87	350	260	120	97	111	111	74	110	95	1541
No. 177 - - - - -	- - -	179	75	360	270	123	123	127	112	65	37	69	1540
No. 178 - - - - -	- - -	186	93	310	260	160	80	136	116	55	61	81	1538
No. 179 - - - - -	- - -	177	92	370	280	43	103	136	103	47	91	93	1535
No. 180 - - - - -	- - -	132	93	320	260	130	121	127	135	67	49	99	1533
No. 181 - - - - -	- - -	182	81	360	250	120	90	129	83	68	61	106	1530
	- - -	157	70	370	280	190	137	133	87	38	68	0	1530
No. 183 - - - - -	- - -	161	93	340	250	58	110	136	100	103	57	121	1529
No. 184 - - - - -	- - -	116	80	310	260	140	71	146	92	123	107	80	1525
No. 185 - - - - -	- - -	174	97	300	310	115	39	138	73	97	79	100	1522
No. 186 - - - - -	- - -	175	92	340	230	120	68	148	111	68	89	78	1519
No. 187 - - - - -	- - -	51	87	380	270	100	91	132	131	104	93	79	1518
No. 188 - - - - -	- - -	169	80	270	290	90	80	128	125	75	82	127	1516
	- - -	92	85	320	260	140	99	160	62	77	98	123	1516
No. 190 - - - - -	- - -	50	84	320	300	170	86	134	129	68	73	101	1515
	- - -	223	96	340	180	0	97	144	87	138	113	97	1515

No. 192	-	-	-	-	-	-	-	-	89	96	375	270	170	85	156	100	92	43	37	1513
No. 193	-	-	-	-	-	-	-	-	123	97	335	280	103	96	172	99	52	72	80	1509
No. 194	-	-	-	-	-	-	-	-	139	100	390	280	93	98	73	113	77	91	52	1506
No. 195	-	-	-	-	-	-	-	-	131	100	390	290	48	86	157	82	67	73	81	1505
						-	-	-	137	86	390	270	155	70	174	70	45	19	89	1505
No. 197	-	-	-	-	-	-	-	-	163	85	380	250	28	85	126	104	79	96	108	1504
No. 198	-	-	-	-	-	-	-	-	146	95	320	300	115	80	137	88	64	42	116	1503
No. 199	-	-	-	-	-	-	-	-	154	91	320	290	140	82	145	104	87	59	28	1500
No. 200	-	-	-	-	-	-	-	-	219	83	360	260	95	75	128	86	72	36	89	1498
No. 201	-	-	-	-	-	-	-	-	93	64	300	270	135	89	146	149	105	66	77	1494
No. 202	-	-	-	-	-	-	-	-	120	99	395	250	180	72	154	74	54	30	62	1490
No. 203	-	-	-	-	-	-	-	-	152	79	270	280	108	94	135	116	78	85	91	1488
No. 204	-	-	-	-	-	-	-	-	130	83	380	240	105	118	155	53	116	86	18	1484
No. 205	-	-	-	-	-	-	-	-	85	91	350	260	190	64	142	120	30	46	105	1483
No. 206	-	-	-	-	-	-	-	-	124	100	355	250	15	86	152	80	96	112	110	1480
No. 207	-	-	-	-	-	-	-	-	154	80	360	280	95	87	73	55	100	79	107	1470
						-	-	-	55	92	398	280	170	91	94	112	70	39	69	1470
No. 209	-	-	-	-	-	-	-	-	70	82	320	300	145	86	148	118	94	81	30	1469
No. 210	-	-	-	-	-	-	-	-	194	46	300	290	85	52	88	120	89	103	101	1468
No. 211	-	-	-	-	-	-	-	-	80	53	350	260	190	88	149	83	45	68	100	1466
No. 212	-	-	-	-	-	-	-	-	232	68	350	240	50	94	52	111	117	76	74	1464
No. 213	-	-	-	-	-	-	-	-	141	78	320	240	130	109	129	121	90	70	34	1462
No. 214	-	-	-	-	-	-	-	-	93	69	399	270	135	81	86	153	49	57	68	1460
						-	-	-	154	47	300	260	160	102	133	135	38	59	72	1460
No. 216	-	-	-	-	-	-	-	-	93	97	375	270	168	70	105	88	26	76	86	1454
No. 217	-	-	-	-	-	-	-	-	103	87	330	280	160	50	162	69	69	65	78	1453
						-	-	-	99	72	390	300	93	91	115	132	76	22	63	1453
No. 219	-	-	-	-	-	-	-	-	147	47	260	270	115	94	119	113	46	98	142	1451
No. 220	-	-	-	-	-	-	-	-	92	84	300	270	95	117	124	103	66	84	115	1450
No. 221	-	-	-	-	-	-	-	-	185	99	398	280	200	87	121	55	21	3	0	1449
						-	-	-	66	72	330	220	190	108	89	105	69	80	120	1449
No. 223	-	-	-	-	-	-	-	-	105	69	300	270	68	129	138	89	118	90	67	1443
No. 224	-	-	-	-	-	-	-	-	90	61	330	270	190	80	130	133	109	49	0	1442
No. 225	-	-	-	-	-	-	-	-	68	65	400	310	93	71	100	146	83	79	25	1440
						-	-	-	188	91	395	260	65	66	148	46	73	53	60	1440
No. 227	-	-	-	-	-	-	-	-	152	35	395	180	120	92	147	152	68	87	10	1438

continued

Table C.—Open Competitions—*continued.*

Name or Number of Candidate, and Date of Competition.	Date of Certificate.	Arithmetic.	Compound Addition.	Orthography.	Handwriting.	Copying Manuscript.	Indexing.	Digest of Returns into Summaries.	English Composition.	Geography.	English History.	Book-keeping.	Total.
May 21, 1878—*cont.*	**Maximum**	300	100	400	400	200	200	200	200	200	200	200	2600
No. 228		85	93	330	280	160	66	154	81	68	49	76	1437
No. 229		159	87	390	280	190	78	42	115	80	61	0	1432
No. 230		123	93	340	280	190	78	139	80	80	27	—	1430
		163	95	340	260	60	81	147	75	52	63	94	1430
No. 232		90	52	400	300	170	56	134	111	8	41	67	1429
No. 233		62	99	350	280	133	89	94	61	70	76	113	1427
No. 234		172	88	330	250	0	105	146	105	99	91	40	1426
No. 235		103	88	375	260	45	73	99	114	89	108	70	1424
No. 236		164	88	240	250	160	94	120	76	93	60	70	1415
		119	85	390	270	0	102	133	120	102	44	50	1415
No. 238		173	88	320	300	5	64	156	59	84	83	79	1411
No. 239		177	63	240	270	0	95	125	100	121	97	122	1410
No. 240		157	87	360	230	18	112	84	90	83	104	83	1408
No. 241		106	100	320	280	118	104	166	84	40	26	65	1404
No. 242		103	95	340	230	58	94	135	71	84	85	107	1402
No. 243		172	77	340	240	25	50	87	110	91	102	105	1399
No. 244		139	76	270	240	140	95	148	75	80	53	82	1398
No. 245		69	58	370	280	170	128	58	111	26	39	87	1396
		45	84	320	300	163	67	128	108	56	54	76	1396
No. 247		130	96	360	220	18	76	145	86	78	80	105	1394
No. 248		132	93	395	260	58	78	90	118	58	43	68	1393
No. 249		66	93	340	270	0	95	118	68	114	110	118	1392
No. 250		159	86	355	230	20	100	84	75	101	120	60	1390

No. 251	-	-	-	-	-	-	-	-	100	87	340	260	8	128	112	151	59	77	67	1389
No. 252	-	-	-	-	-	-	-	-	180	70	300	280	48	100	86	115	78	52	74	1383
No. 253	-	-	-	-	-	-	-	-	138	92	320	280	53	57	132	94	83	52	78	1379
No. 254	-	-	-	-	-	-	-	-	66	87	320	280	25	85	109	69	108	116	109	1374
No. 255	-	-	-	-	-	-	-	-	102	81	365	270	110	67	130	67	84	57	35	1368
No. 256	-	-	-	-	-	-	-	-	113	86	300	270	143	88	82	83	82	51	68	1366
No. 257	-	-	-	-	-	-	-	-	135	91	200	210	123	83	173	97	72	68	109	1361
No. 258	-	-	-	-	-	-	-	-	100	78	320	340	85	73	167	130	40	22	5	1360
No. 259	-	-	-	-	-	-	-	-	186	88	340	270	20	97	126	73	44	39	69	1352
No. 260	-	-	-	-	-	-	-	-	119	75	350	240	110	92	119	80	42	33	91	1351
No. 261	-	-	-	-	-	-	-	-	69	58	270	270	160	124	91	112	43	61	88	1346
						-	-	-	129	64	330	300	90	64	131	86	95	42	15	1346
No. 263	-	-	-		-	-	-	-	130	92	320	260	150	—	65	124	—	114	87	1342
No. 264	-	-	-	-	-	-	-	-	94	90	350	250	73	86	119	89	60	43	86	1340
No. 265	-	-	-	-		-	-	-	114	92	365	290	73	46	64	85	52	90	68	1339
No. 266	-	-	-	-	-	-	-	-	20	97	330	330	120	102	124	71	74	53	17	1338
No. 267	-	-	-	-	-	-	-	-	144	68	340	270	25	76	139	101	41	36	96	1336
No. 268	-	-	-	-	-	-	-	-	130	96	398	290	15	72	43	67	73	74	73	1331
No. 269	-	-	-	-	-	-	-	-	98	92	280	240	120	101	125	95	44	59	75	1329
No. 270	-	-	-	-	-	-	-	-	33	83	350	250	65	115	143	106	48	82	49	1324
No. 271	-	-	-	-	-	-	-	-	137	85	280	240	8	74	105	103	90	81	116	1319
No. 272	-	-	-	-	-	-	-	-	163	82	295	260	60	50	176	82	32	65	53	1318
						-	-	-	120	85	340	270	53	91	149	28	47	34	101	1318
No. 274	-	-	-	-	-	-	-	-	115	95	330	280	85	55	148	104	37	4	62	1315
No. 275	-	-	-	-	-	-	-	-	129	59	300	320	160	78	153	70	40	0	0	1309
						-	-	-	74	41	280	280	120	117	95	136	117	49	0	1309
No. 277	-	-	-	-	-	-	-	-	86	81	320	280	43	76	46	95	97	74	108	1306
No. 278	-	-	-		-	-	-	-	23	95	375	280	180	130	96	84	9	28	0	1300
No. 279	-	-	-	-	-	-	-	-	118	88	320	280	0	82	115	151	61	49	32	1296
No. 280	-	-	-	-	-	-	-	-	44	87	360	260	70	107	128	86	38	56	55	1291
No. 281	-	-	-	-	-	-	-	-	60	13	370	260	160	88	88	104	81	61	5	1290
No. 282	-	-	-	-	-	-	-	-	144	92	300	280	130	67	89	68	31	41	47	1289
No. 283	-	-	-	-	-	-	-	-	96	85	395	230	125	106	118	98	10	12	10	1285
No. 284	-	-	-	-	-	-	-	-	171	61	280	220	93	94	110	84	90	73	7	1283
No. 285	-	-	-	-	-	-	-	-	90	94	380	270	18	50	139	126	31	20	46	1264
No. 286	-	-	-	-	-	-	-	-	96	90	330	270	55	66	108	84	100	59	0	1258

continued

Table C.—Open Competitions—*continued.*

Name or Number of Candidate, and Date of Competition.	Date of Certificate.	Arithmetic.	Compound Addition.	Orthography.	Handwriting.	Copying Manuscript.	Indexing.	Digest of Returns into Summaries.	English Composition.	Geography.	English History.	Book-keeping.	Total.
May 21, 1878—*cont.*	**Maximum**	**300**	**100**	**400**	**400**	**200**	**200**	**200**	**200**	**200**	**200**	**200**	**2600**
No. 287		102	87	260	300	70	80	102	75	84	26	63	1249
No. 288		85	89	315	260	0	80	133	111	23	37	114	1247
No. 289		101	95	390	250	0	84	117	85	46	0	75	1243
No. 290		160	79	280	270	90	103	0	40	59	64	96	1241
No. 291		49	68	260	300	53	108	100	118	91	93	0	1240
No. 292		74	84	340	280	53	69	84	119	56	62	18	1239
No. 293		114	63	280	270	28	76	105	92	59	99	52	1238
No. 294		130	93	280	300	0	59	102	127	48	19	74	1232
No. 295		102	44	330	200	110	80	84	121	96	29	24	1220
No. 296		62	57	300	280	65	103	94	33	96	57	72	1219
No. 297		154	58	160	250	170	57	133	80	90	62	0	1214
No. 298		70	92	330	240	0	77	90	53	74	93	90	1209
No. 299		133	57	260	270	125	69	133	91	23	39	5	1205
No. 300		102	100	320	240	0	82	97	75	68	57	55	1196
No. 301		52	97	380	300	60	29	116	55	49	46	3	1187
No. 302		47	99	330	240	140	80	99	73	35	7	32	1182
No. 303		120	71	390	240	0	69	67	52	84	62	21	1176
No. 304		80	74	200	250	170	79	95	71	94	41	20	1174
No. 305		77	77	160	260	50	82	143	104	65	54	100	1172
No. 306		56	81	240	300	10	47	88	110	72	83	79	1166
No. 307		97	51	300	290	50	42	38	78	93	69	62	1165
No. 308		116	91	240	250	8	96	116	67	54	79	38	1155
No. 309		112	39	300	200	0	77	99	110	75	78	61	1151

No. 310	134	98	335	100	85	52	95	77	52	37	90	1150
No. 311	65	60	340	290	78	88	73	96	31	18	12	1146
No. 312	115	63	220	240	0	104	81	116	28	90	79	1136
No. 313	68	53	350	260	38	37	122	93	43	38	25	1127
No. 314	95	71	220	240	20	56	136	87	94	89	18	1126
No. 315	71	92	360	270	0	62	78	43	48	31	44	1099
No. 316	57	85	260	260	18	55	122	84	80	68	5	1094
No. 317	82	100	260	280	25	63	81	75	58	43	20	1087
No. 318	30	89	180	280	160	91	0	72	77	31	52	1062
No. 319	12	92	260	280	118	49	63	78	42	12	54	1060
No. 320	10	71	260	270	63	70	72	89	48	33	23	1009
No. 321	161	74	0	240	0	51	107	79	55	63	74	904
No. 322	33	81	220	240	0	48	97	50	37	36	34	876
No. 323	25	0	230	220	68	64	0	75	56	46	15	799
No. 324	—	—	—	—	35	—	0	112	—	56	—	203
No. 325	—	—	—	—	—	—	—	65	—	29	—	94

The marks obtained in subsequent Open Competitions for Men Clerkships of the Lower Division have been published with the examination papers in separate pamphlets shortly after the conclusion of each examination.

Table C.—Open Competitions—*continued.*

Name or Number of Candidate, and Date of Competition.	Date of Certificate.	Arithmetic.	Compound Addition.	Orthography.	Handwriting.	Copying Manuscript.	English Composition.	Geography.	Total.
Open Competition for 22 Boy Clerkships in the Lower Division of the Civil Service.									
June 12, 1878.	**Maximum - -**	**300**	**100**	**400**	**400**	**200**	**200**	**200**	**1800**
Ravenscroft; A. C. - - -	1878, Aug. 2 - - -	274	96	360	300	171	175	195	1571
Child; J. A. E. - - -	„ July 31 - - -	286	96	390	330	188	143	118	1551
Neatham; A. H. J. - - -	„ Aug. 1 - - -	286	96	395	250	188	158	169	1542
Tattam; H. C. - - - -	„ July 29 - - -	268	100	395	350	176	138	63	1490
Lechene; A. H. - - -	„ Aug. 9 - - -	206	76	375	340	176	120	137	1430
Bramwell; H. E. - - -	„ „ 20 - - -	264	80	395	220	152	143	170	1424
Rogers; G. T. - - - -	„ July 31 - - -	256	36	320	360	176	150	122	1420
Sage; C. T. - - - -	„ „ 30 - - -	258	76	380	280	188	120	113	1415
Prier; A. J. - - - -	„ „ 31 - - -	268	84	390	230	200	158	63	1393
Taylor; F. - - - -	„ Aug. 1 - - -	206	84	395	270	128	153	140	1376
Mitchell; T. J. - - - -	„ July 31 - - -	202	80	360	290	141	183	110	1366
Rockett; E. D. - - - -	„ Aug. 2 - - -	268	92	395	230	129	135	102	1351
Shorey; A. T. - - - -	„ „ 3 - - -	230	76	300	330	164	130	113	1343
Kennedy; C. R. - - -	„ „ 1 - - -	246	54	400	300	164	130	48	1342
Bryant; C. H. - - - -	„ „ 7 - - -	266	80	320	280	188	115	81	1330
Hulme; F. W. G. - - -	„ „ 1 - - -	264	28	340	300	152	145	96	1325
Dobson; H. - - - -	„ „ 1 - - -	276	80	320	270	195	120	60	1321
Attwater; H. P. - - -	„ July 31 - - -	248	92	260	300	164	143	76	1283

Tasker; J. W.	1878, Aug.	9	229	100	350	250	140	150	59	1278
Cooper; F.	„ July	31	142	58	390	300	152	150	85	1277
Genochio; H.	„ „	30	238	54	360	340	58	113	103	1266
Coles; R. J.	„ „	30	282	84	300	220	176	110	71	1243
No. 23			206	64	340	280	164	133	52	1239
No. 24			100	92	380	260	200	170	18	1220
No. 25			254	68	320	240	128	135	67	1212
No. 26			262	42	300	240	152	125	85	1206
No. 27			180	80	360	260	164	113	45	1202
No. 28			134	20	370	340	140	103	66	1173
No. 29			174	42	330	280	116	128	99	1169
			116	80	300	300	164	158	51	1169
No. 31			166	28	320	270	128	120	133	1165
No. 32			218	80	300	240	132	115	59	1144
No. 33			228	8	350	250	65	125	103	1129
No. 34			228	16	280	300	104	125	75	1128
No. 35			234	16	300	280	100	108	67	1105
			134	24	340	270	128	123	86	1105
No. 37			176	64	270	280	176	80	52	1098
No. 38			188	46	360	240	140	115	—	1089
No. 39			150	32	340	270	152	120	24	1088
No. 40			184	50	325	240	92	140	51	1082
No. 41			140	58	290	280	152	125	36	1081
No. 42			196	80	240	250	69	100	144	1079
No. 43			218	46	260	290	116	105	33	1068
No. 44			138	12	300	280	116	135	82	1063
No. 45			98	54	350	270	140	98	49	1059
No. 46			126	36	250	300	152	98	84	1046
No. 47			152	36	320	240	140	105	46	1039
No. 48			186	68	280	250	38	133	75	1030
No. 49			186	58	300	240	17	118	64	988
No. 50			90	68	260	280	126	118	30	972
No. 51			192	86	280	260	0	108	57	933
No. 52*			172	58	260	230	0	118	65	903
			128	42	280	220	86	115	32	903

* Thirty-six other candidates presented themselves, but failed to qualify in one or more of the obligatory subjects.

Table C.—Open Competitions—*continued.*

Name or Number of Candidate, and Date of Competition.	Date of Certificate.	Arithmetic.	Compound Addition.	Orthography.	Handwriting.	Copying Manuscript.	English Composition.	Geography.	Total.
Open Competition for 29 Boy Clerkships in the Lower Division of the Civil Service.									
December 17, 1878.	**Maximum** - -	**300**	**100**	**400**	**400**	**200**	**200**	**200**	**1800**
Moore; E. - - - -	1879, Jan. 30 - - -	300	88	360	290	144	140	148	1470
Meek; W. A. - - - -	„ Jan. 31 - - -	300	72	380	300	160	169	53	1434
Rickard; J. - - - -	„ Feb. 1 - - -	224	80	350	280	160	140	180	1414
Weeden; W. - - - -	„ Feb. 26 - - -	272	84	390	280	136	118	98	1378
Turner; W. J. - - - -	„ Feb. 10 - - -	292	68	280	280	164	109	163	1356
Barlow; H. J. - - - -	„ Feb. 4 - - -	278	76	395	250	89	183	79	1350
Sloggett; H. P. - - -	„ Mar. 18 - - -	186	72	340	300	154	140	152	1344
Stoneham; E. M. - - -	„ Jan. 28 - - -	278	92	350	250	128	125	113	1336
No. 9 (*declined*) - - -	- - - -	182	28	370	360	160	178	57	1335
Atkin; P. H. - - - -	1879, Jan. 25 - - -	192	50	380	320	168	120	99	1329
Hall; G. W. - - - -	„ Jan. 28 - - -	298	88	240	290	139	143	130	1328
Taylor; I. - - - -	„ Jan. 30 - - -	244	72	280	300	136	133	156	1321
Kemp; H. - - - -	„ Jan. 28 - - -	250	100	360	220	132	130	128	1320
Barber; J. E. - - - -	„ Jan. 30 - - -	268	36	400	280	53	130	152	1319
Nash; T. S. - - - -	„ Jan. 28 - - -	254	50	300	270	144	139	161	1318
Reavell; R. J. - - - -	„ Jan. 28 - - -	210	54	400	300	81	148	122	1315
Pettit; W. R. - - - -	„ Jan. 28 - - -	240	84	350	230	184	135	88	1311
Bellingham; A. - - -	„ Jan. 23 - - -	272	100	240	320	148	131	96	1307

Price; B. J. H. G. C. P.	1879, Jan. 7	192	24	380	250	168	155	133	1302
Warren; G.	„ Jan. 31	228	16	350	290	88	139	190	1301
Huggett; J.	„ Feb. 7	294	84	300	230	107	150	123	1288
Franklin; R. F.	„ Feb. 12	202	20	380	320	113	165	76	1276
Staniford; W. A.	„ Jan. 28	244	68	280	270	136	125	151	1274
Hewson; J. A.	„ Jan. 28	238	58	240	270	146	161	154	1267
Best; G. R.	„ Jan. 27	208	64	300	280	101	144	165	1262
Hewison; B.	„ Feb. 4	268	88	330	250	110	150	58	1254
Lawson; E. J.	„ Jan. 30	274	64	200	320	152	128	114	1252
Page; F.	„ Feb. 4	268	28	340	210	100	173	128	1247
Reading; C. W. H.	„ Jan. 30	298	96	320	240	100	105	87	1246
No. 30	-	152	58	340	260	160	173	101	1244
No. 31	-	184	0	280	270	125	170	200	1229
No. 32	-	276	80	320	240	96	110	104	1226
No. 33	-	226	80	300	220	152	120	125	1223
	-	264	88	240	260	92	109	170	1223
No. 35	-	258	84	260	230	82	160	123	1197
No. 36	-	200	42	360	340	66	100	86	1194
No. 37	-	286	46	320	230	132	106	72	1192
No. 38	-	270	46	240	270	152	135	77	1190
	-	216	42	350	280	44	130	128	1190
No. 40	-	300	64	350	240	79	100	54	1187
No. 41	-	184	66	360	240	114	140	77	1181
No. 42	-	166	16	330	320	112	138	96	1178
	-	270	8	240	260	162	116	122	1178
	-	194	42	380	240	64	148	105	1173
No. 44	-	214	68	260	300	86	159	86	1173
No. 46	-	286	88	320	200	63	118	91	1166
No. 47	-	130	92	360	280	86	125	73	1146
No. 48	-	210	58	370	210	95	130	69	1142
	-	208	68	300	220	123	150	73	1142
No. 50	-	234	28	220	330	136	108	79	1135
No. 51	-	214	54	330	250	104	85	89	1126
No. 52	-	282	72	240	220	120	121	70	1125
No. 53	-	194	0	200	310	110	176	115	1105
No. 54	-	196	16	240	240	176	138	98	1104

continued

Table C.—Open Competitions—*continued.*

Name or Number of Candidate, and Date of Competition.	Date of Certificate.	Arithmetic.	Compound Addition.	Orthography.	Handwriting.	Copying Manuscript.	English Composition.	Geography.	Total.
December 17, 1878—*cont.*	**Maximum** - -	**300**	**100**	**400**	**400**	**200**	**200**	**200**	**1800**
No. 55 - - - - - -	- - - -	236	84	240	230	120	120	70	1100
No. 56 - - - - - -	- - - -	236	12	220	250	132	160	77	1087
No. 57 - - - - -	- - - -	250	20	360	250	0	129	77	1086
No. 58 - - - - - -	- - - -	198	46	360	220	45	163	17	1049
No. 59 - - - - - -	- - - -	264	4	210	250	27	161	132	1048
No. 60 - - - - - -	- - - -	224	24	320	200	140	101	38	1047
No. 61 - - - - - -	- - - -	184	68	300	250	46	140	48	1036
No. 62 - - - - - -	- - - -	188	8	220	210	129	160	116	1031
No. 63 - - - - - -	- - - -	266	76	200	220	70	118	65	1015
No. 64 - - - - - -	- - - -	136	28	230	310	112	119	52	987
No. 65 - - - - - -	- - - -	260	20	200	200	78	130	89	977
No. 66 - - - - - -	- - - -	136	16	360	200	59	99	89	959
No. 67 - - - - - -	- - - -	146	12	320	280	30	114	56	958
No. 68 - - - - - -	- - - -	256	4	230	250	0	100	100	940
	- - - -	208	8	260	240	59	125	40	940
No. 70 - - - - - -	- - - -	236	88	260	200	24	110	14	932
No. 71 - - - - - -	- - - -	150	0	200	220	128	111	118	927
No. 72 - - - - - -	- - - -	200	28	220	200	56	120	81	905
No. 73 - - - - - -	- - - -	224	32	200	220	0	153	75	904
No. 74 - - - - - -	- - - -	186	24	280	230	59	60	61	900
No. 75* - - - - -	- - - -	168	0	200	260	33	130	91	882

* Forty-two other candidates presented themselves at this examination, but failed to qualify in one or more of the obligatory subjects.

Table C.—Open Competitions—*continued.*

Name or Number of Candidate, and Date of Competition.	Date of Certificate.	Arithmetic.	Orthography.	Handwriting.	Intelligence (in Dictation and Orthographical Paper).	English Composition.	Geography.	English History.	English Grammar.	Euclid.	Plane Trigonometry.	Pure Mathematics.	Mixed Mathematics.	Algebra.	Pure Mathematics (Higher).	Mixed Mathematics (Higher).	Elementary Chemistry and Physics.	Total.
ADMIRALTY. OPEN COMPETITION FOR THREE SITUATIONS AS ASSISTANT SCHOOLMASTER IN H.M. DOCKYARDS.																		
February 19, 1878.	**Maximum** -	**350**	**200**	**200**	**100**	**150**	**150**	**150**	**150**	**200**	**300**	**350**	**300**	**300**	**700**	**350**	**300**	**4250**
Cotter; V. C. -	1878, March 30 -	272	170	140	100	125	128	100	108	143	177	236	132	241	374	117	145	2708
Austen; G. H. -	„ April 5 -	277	150	135	80	120	92	89	93	120	136	162	213	183	225	85	275	2435
Lewis; T. - -	„ May 2 -	240	170	140	100	90	134	89	89	115	110	165	112	205	289	—	96	2144
No. 4 - -	- - -	293	160	145	100	90	61	51	53	105	158	225	98	201	194	3	121	2058
No. 5* - -	- - -	299	150	140	95	105	88	65	73	137	124	162	100	137	108	25	152	1960

* Two other candidates presented themselves, but failed in the obligatory part of the examination.

Table C.—Open Competitions—*continued.*

Name or Number of Candidate, and Date of Competition.	Date of Certificate.	Part I.				Part II.					Total.
		Mathematics.	Mechanical Philosophy.	Experimental Science.	Geology and Mineralogy.	Strength of Materials.	Railway and Canal Engineering.	Marine Engineering.	Hydraulic Engineering.	County Works.	
Open Competition for one County Surveyorship, Ireland (held under 25 & 26 Vict. c. 106).											
March and April, 1878.	**Maximum** -	**100**	**100**	**100**	**40**	**100**	**140**	**140**	**140**	**140**	**1000**
Draper; C. - - -	1878, May 15 - -	41	77	61	19	86	122	135	102	82	725
No. 2 - - - -	- - - - -	0	42	57	18	81	122	131	106	92	649
No. 3 - - - -	- - - - -	23	53	44	15	63	104	117	94	95	608
No. 4 - - - -	- - - - -	27	41	33	17	74	100	133	91	91	607
No. 5 - - - -	- - - - -	0	28	24	11	70	95	126	100	77	531
No. 6 - - - -	- - - - -	0	42	26	0	55	105	126	83	62	499
No. 7 - - - -	- - - - -	0	36	28	14	54	83	95	69	55	434
No. 8 - - - -	- - - - -	0	27	31	0	48	83	98	60	51	398
No. 9 - - - -	- - - - -	0	22	23	9	55	67	82	63	45	366
No. 10* - - - -	- - - - -	0	20	0	0	41	90	27	53	55	286

* One other candidate presented himself for examination, but failed in the obligatory part of the examination.

TABLE C.—Open Competitions—*continued.*

Name or Number of Candidate, and Date of Competition.	Date of Certificate.	Arithmetic.	Orthography.	Handwriting.	Intelligence (in Dictation and Orthographical Papers).	English Composition.	Précis.	Geography.	Euclid.	Latin.	French.	German.	Criminal Law.	Mercantile Law.	Total.
FOREIGN OFFICE.															
OPEN COMPETITION FOR SIX SITUATIONS AS STUDENT INTERPRETER IN CHINA, JAPAN, AND SIAM.															
February 26, 1878.	**Maximum** -	200	200	200	100	200	200	200	200	400	300	300	250	250	3000
Küchler; L. - -	1878, April 9 -	171	140	120	100	150	110	146	120	—	264	252	105	208	1886
Warry; W. - -	„ „ 9 -	127	180	150	100	150	155	79	74	365	191	—	125	180	1876
Cording; E. - -	„ March 29 -	165	180	160	100	100	125	91	110	270	222	204	—	102	1829
Tratman; J. N. -	„ „ 26 -	133	200	140	100	160	95	123	124	340	271	137	—	—	1823
Henley; L. W. -	„ April 3 -	184	200	150	100	130	120	84	82	265	204	—	110	190	1819
Hausser; P. F. -	„ March 26 -	183	180	140	100	160	120	—	78	285	275	281	—	—	1802
No. 7 - - -	- - - -	108	175	155	100	125	110	58	62	145	215	209	90	167	1719
No. 8 - - -	- - - -	110	160	130	100	120	95	54	75	190	159	187	110	200	1690
No. 9 - - -	- - - -	178	200	140	100	170	125	73	81	290	183	121	—	—	1661
	- - - -	187	200	120	80	140	80	109	56	185	244	260	—	—	1661
No. 11 - - -	- - - -	180	190	140	100	140	125	94	53	350	169	—	105	0	1646
No. 12 - - -	- - - -	133	150	150	100	90	105	60	85	335	187	—	75	125	1595
No. 13 - - -	- - - -	140	190	140	100	120	125	149	94	—	185	—	140	177	1560
No. 14 - - -	- - - -	83	180	115	90	150	115	83	33	215	223	260	—	—	1547
No. 15 - - -	- - - -	129	180	130	90	160	90	95	83	295	208	—	—	—	1460
No. 16 - - -	- - - -	153	190	125	100	120	115	39	133	225	44	—	85	128	1457
No. 17 - - -	- - - -	182	110	160	90	100	110	123	132	155	143	—	70	80	1455
No. 18 - - -	- - - -	177	140	180	80	130	140	84	43	35	113	—	125	198	1445

Table C.—Open Competitions—*continued.*

Name or Number of Candidate, and Date of Competition.	Date of Certificate.	Arithmetic.	Orthography.	Handwriting.	Intelligence (in Dictation and Orthographical Papers).	English Composition.	Précis.	Geography.	Euclid.	Latin.	French.	German.	Criminal Law.	Mercantile Law.	Total.
FOREIGN OFFICE STUDENT INTERPRETERS—*cont.*															
February 26, 1878.	**Maximum** -	**200**	**200**	**200**	**100**	**200**	**200**	**200**	**200**	**400**	**300**	**300**	**250**	**250**	**3000**
No. 19 - -	- - - -	79	180	155	80	170	95	116	133	85	152	198	—	—	1443
No. 20 - -	- - - -	174	160	140	100	130	105	74	—	185	198	148	—	—	1414
No. 21 - -	- - - -	146	140	110	80	80	80	111	119	35	205	134	35	113	1388
No. 22 - -	- - - -	191	175	135	100	145	75	121	96	60	132	—	45	105	1380
No. 23 - -	- - - -	126	140	110	100	145	65	52	57	110	172	120	75	92	1364
No. 24 - -	- - - -	120	200	130	90	90	110	48	69	200	123	—	75	63	1318
No. 25 - -	- - - -	122	200	150	100	140	65	169	21	45	196	—	30	67	1305
No. 26 - -	- - - -	123	195	125	80	145	105	113	30	0	205	—	100	60	1281
No. 27 - -	- - - -	170	190	155	90	160	85	35	82	105	77	—	75	43	1267
No. 28 - -	- - - -	113	150	110	100	150	130	52	54	0	200	—	45	118	1222
No. 29 - -	- - - -	196	180	160	90	70	130	113	44	0	0	0	95	140	1218
No. 30 - -	- - - -	149	160	155	60	130	115	52	30	80	195	45	—	—	1171
No. 31 - -	- - - -	113	165	145	100	150	85	31	31	105	106	—	40	67	1138
No. 32 - -	- - - -	178	200	140	100	125	125	78	73	25	61	0	—	—	1105
No. 33 - -	- - - -	101	160	155	90	80	115	87	—	—	121	—	40	67	1016
No. 34 - -	- - - -	143	140	150	80	110	105	70	—	205	—	—	—	—	1003
No. 35 - -	- - - -	158	200	140	100	80	50	79	7	50	138	—	—	—	1002
No. 36 - -	- - - -	102	110	110	100	66	100	53	60	—	194	39	—	—	935
No. 37 - -	- - - -	157	150	145	85	80	45	51	78	35	25	0	—	—	851
No. 38 - -	- - - -	97	150	145	100	80	75	39	55	0	68	—	—	—	809
No. 39* - -	- - - -	104	120	125	80	125	15	68	12	—	—	—	—	—	649

* Fourteen other candidates presented themselves, but failed in the obligatory part of the examination.

Table C.—Open Competitions—*continued.*

Name or Number of Candidate, and Date of Competition.	Date of Certificate.	Arithmetic.	Compound Addition.	Orthography.	Handwriting.	Copying Manuscript.	Indexing.	Digest of Returns into Summaries.	English Composition.	Geography.	English History.	Book-keeping.	Total.
INDIA AUDIT OFFICE. OPEN COMPETITION FOR THREE SITUATIONS AS CLERK OF THE LOWER DIVISION IN THE INDIA AUDIT OFFICE.													
July 16, 1878.	**Maximum** -	300	100	400	400	200	200	20 0	200	200	200	200	2600
Harman; C. - - -	1878, August 19 - -	292	100	330	280	190	170	155	147	141	136	184	2125
Hodgson; J. - - -	„ „ 19 - -	237	100	400	280	185	105	128	157	73	46	139	1850
Horspool; W. P. - -	„ „ 19 - -	210	32	350	240	160	135	125	127	100	118	151	1748
No. 4 - - -	- - - - -	278	20	350	280	45	140	147	150	160	119	51	1740
No. 5 - - -	- - - - -	266	4	310	260	150	155	113	133	169	158	3	1721
No. 6 - - -	- - - - -	197	58	320	270	160	165	55	83	197	126	70	1701
No. 7 - - -	- - - - -	224	72	310	330	170	0	144	153	92	100	70	1665
No. 8 - - -	- - - - -	257	52	260	220	120	45	113	120	188	132	73	1580
No. 9 - - -	- - - - -	259	74	330	240	75	85	134	97	115	84	80	1573
No. 10 - - -	- - - - -	222	58	380	260	105	145	118	63	125	48	35	1559
No. 11 - - -	- - - - -	245	46	210	260	105	120	132	87	93	111	70	1479

Table C.—Open Competitions—*continued.*

Name or Number of Candidate, and Date of Competition.	Date of Certificate.	Arithmetic.	Compound Addition.	Orthography.	Handwriting.	Copying Manuscript.	Indexing.	Digest of Returns into Summaries.	English Composition.	Geography.	English History.	Book-keeping.	Total.
INDIA OFFICE.													
OPEN COMPETITION FOR ONE SITUATION AS BOOK-KEEPER IN THE ACCOUNTS BRANCH OF THE INDIA OFFICE.													
February 12, 1878.	**Maximum** - -	400		400	400	200	200	200	200	200	200	200	2600
Harridance; H. - -	1878, March 8 - -	383		395	340	180	120	190	180	82	86	143	2099
No. 2 - - -	- - - - -	349		370	310	190	98	194	125	100	125	153	2014
No. 3 - - -	- - - - -	334		290	360	180	100	185	170	76	137	147	1979
No. 4 - - -	- - - - -	348		330	340	150	97	180	130	92	133	158	1958
No. 5 - - -	- - - - -	286		370	320	170	110	174	130	63	65	107	1795
No. 6 - - -	- - - - -	219		350	300	170	100	130	140	72	100	134	1715
No. 7 - - -	- - - - -	190		160	240	120	67	130	135	110	44	0	1196

Table C.—Open Competitions—*continued.*

Name or Number of Candidate, and Date of Competition.	Date of Certificate.	Arithmetic.	Orthography.	Handwriting.	Copying Manuscript.	English Composition.	Geography.	Indexing.	Digest of Returns.	English History.	Book-keeping.	Latin.	Principles of Scotch Law.	Total.
INLAND REVENUE.														
OPEN COMPETITION FOR TWO SITUATIONS AS THIRD CLASS CLERK IN THE SOLICITOR'S OFFICE, INLAND REVENUE, EDINBURGH.														
July 16, 1878.	**Maximum** -	400	400	400	200	200	200	200	200	200	200	400	1200	4200
Jamieson; W. - - - -	1878, September 9 -	323	370	260	176	177	163	135	103	75	6	256	640	2684
No. 2 - - - - -	- - - -	327	395	240	100	118	146	90	111	80	90	0	520	2212
No. 3 - - - - -	- - - -	350	230	220	30	165	186	100	73	102	76	177	200	1909
No. 4 - - - - -	- - - -	214	0	250	100	85	188	60	82	68	37	219	160	1653
OPEN COMPETITION FOR ONE THIRD CLASS CLERKSHIP, IN THE SOLICITOR'S OFFICE OF THE INLAND REVENUE, EDINBURGH.														
October 29, 1878.														
Boyd; T. J. - - -	1878, Nov. 30 -	346	380	240	180	160	199	120	106	176	80	360	910	3207
No. 2 - - - - -	- - - -	388	320	340	180	120	169	140	168	113	165	135	430	2668
No. 3 - - - - -	- - - -	380	280	345	150	80	126	140	186	104	120	0	0	1911
No. 4 - - - - -	- - - -	336	335	290	0	115	118	80	114	104	150	215	0	1857
No. 5 - - - - -	- - - -	0	0	0	0	0	4	20	45	—	3	0	—	72

Table C.—Open Competitions—*continued.*

Name or Number of Candidate, and Date of Competition.	Date of Certificate.	Précis.	Elementary Geometry.	Practical Geometry.	Mechanical Drawing.	Mechanics and Mechanism.	Chemistry.	Electricity and Magnetism.	Hydrostatics.	Total.
PATENT OFFICE.										
OPEN COMPETITIONS FOR SIX SITUATIONS AS INDEXING AND ABRIDGING CLERK IN THE PATENT OFFICE.										
June 18, 1878.	**Maximum** - -	**300**	**100**	**100**	**100**	**600**	**600**	**200**	**200**	**2200**
Munro; J. M. H. - - -	1878, July 25 - - -	210	69	50	44	418	564	140	63	1558
Gray; J. - - - -	" " 23 - - -	205	95	48	55	472	353	172	91	1491
Hatfield; H. - - -	" " 24 - - -	180	82	85	75	393	258	165	81	1319
Cliff; A. - - - -	" " 24 - - -	235	63	60	83	501	106	124	62	1234
Walke; A. J. - - -	" " 29 - - -	225	81	69	42	493	146	88	76	1220
Martin; W. - - -	" " 26 - - -	130	77	85	87	440	156	152	66	1193
No. 7 - - - -	- - - - -	170	77	55	67	367	208	134	75	1153
No. 8 - - - -	- - - - -	135	75	33	16	367	355	74	73	1128
No. 9 - - - -	- - - - -	215	26	23	70	306	234	167	56	1117
No. 10 - - - -	- - - - -	200	59	24	—	230	380	166	42	1101
No. 11 - - - -	- - - - -	245	87	20	18	104	361	111	27	973
No. 12 - - - -	- - - - -	225	51	—	—	207	313	110	66	972
No. 13 - - - -	- - - - -	125	34	38	21	295	250	130	61	954
No. 14 - - - -	- - - - -	180	73	38	—	251	155	105	76	878
No. 16 - - - -	- - - - -	200	91	35	46	377	12	39	78	878
No. 17 - - - -	- - - - -	145	50	45	39	306	150	67	64	866
No. 18 - - - -	- - - - -	210	37	—	—	—	466	83	47	843
No. 19 - - - -	- - - - -	200	58	14	14	103	272	65	27	753
No. 20 - - - -	- - - - -	210	73	63	60	282	—	—	49	737
No. 21 - - - -	- - - - -	120	62	32	6	265	71	66	63	685
No. 22 - - - -	- - - - -	160	86	0	0	230	—	73	126	675
No. 23 - - - -	- - - - -	160	63	18	0	243	101	40	40	665
No. 24 - - - -	- - - - -	185	44	15	52	264	40	—	43	643
No. 25* - - - -	- - - - -	155	88	5	0	294	—	27	57	626
		185	33	15	40	205	—	79	41	598

* Eleven other candidates presented themselves, but failed in the obligatory part of the examination.

Table C.—Open Competitions—*continued.*

Name or Number of Candidate, and Date of Competition.	Date Certificate.	Arithmetic.	Orthography.	Handwriting.	English Composition.	Common Law.	Common Law Procedure and Practice.	Criminal Law.	Law of Evidence.	Conveyancing.	Geography.	Bookkeeping.	Equity, &c.	Bankruptcy, &c.	Total.
POST OFFICE.															
OPEN COMPETITION FOR SITUATION AS PROFESSIONAL CLERK IN THE SOLICITOR'S OFFICE OF THE GENERAL POST OFFICE, DUBLIN.															
April 9, 1878.	Maximum -	100	150	150	100	150	150	300	300	400	100	100	400	200	2600
Bate; E. R. - -	1878, May 16 -	56	135	110	75	70	89	141	136	180	42	—	178	132	1344
No. 2 - - -	- - -	0	105	105	60	66	49	108	154	0	—	12	—	108	767

Table C.—Open Competitions—*continued.*

Name or Number of Candidate, and Date of Competition.	Date of Certificate.	Arithmetic.	Orthography.	Handwriting.	English Composition.	Common Law.	Criminal Law.	Law of Evidence.	Conveyancing.	Geography.	English History.	Latin.	French.	Mercantile Bookkeeping.	Equity and Practice of the Courts.	Bankrupcy and Practice of the Courts.	Total.
TREASURY.																	
OPEN COMPETITION FOR ONE SITUATION AS CLERK IN THE SOLICITOR'S OFFICE OF THE TREASURY.																	
June 11, 1878.	**Maximum**	100	150	150	100	300	300	300	400	100	100	100	100	100	400	200	
Warne; H. M.* - -	1878, July 18	64	132		95	150	145	214	256	20	41	75	60	8	233	101	1714

* Three other candidates presented themselves, but failed in the obligatory part of the examination.

Table C.—Open Competitions—*continued.*

Name or Number of Candidate, and Date of Competition.	Date of Certificate.	Arithmetic.	Orthography.	Handwriting.	English Composition.	Total.
Treasury—*cont.*						
Open Competition for One Supplementary Clerkship in the Solicitor's Office of the Treasury.						
March 12. 1878.	**Maximum** -	**300**	**200**	**200**	**200**	**900**
Bridgeman; B. J. - -	1878, April 12 - -	298	170	170	105	743
No. 2 - - - -	- - - -	221	170	175	145	711
No. 3 - - - -	- - - -	287	150	180	75	692
No. 4 - - - -	- - - -	220	160	145	125	650
No. 5 - - - -	- - - -	267	100	185	90	642
No. 6 - - - -	- - - -	257	160	150	70	637
No. 7 - - - -	- - - -	184	190	140	85	599
No. 8 - - - -	- - - -	174	165	145	80	564
No. 9 - - - -	- - - -	226	110	150	75	561
No. 10 - - - -	- - - -	163	165	130	85	543
No. 11* - - -	- - - -	194	140	130	70	534

* Ten other candidates presented themselves, but failed in the obligatory part of the examination.

Table C.—Open Competitions—*continued.*

Name or Number of Candidate, and Date of Competition.	Date of Certificate.	Arithmetic.	Orthography.	Handwriting.	English Composition.	Total.
Treasury—*cont.*						
Open Competition for One Situation as Supplementary Clerk in the Solicitor's Office of the Treasury.						
June 11, 1878.	**Maximum** -	**300**	**200**	**200**	**200**	**900**
No. 1 (*declined*) - -	- - - -	274	180	175	150	779
Batchelor; H. - -	- - - -	276	190	165	140	771
No. 3 - - - -	- - - -	265	185	120	170	740
No. 4 - - - -	- - - -	276	185	130	103	694
No. 5 - - - -	- - - -	243	160	165	66	634
No. 6 - - - -	- - - -	201	170	140	83	594
No. 7* - - -	- - - -	159	140	130	95	524

* Five other candidates presented themselves, but failed in the obligatory part of the examination.

Table C.—Open Competitions—*continued.*

Name or Number of Candidate, and Date of Competition.	Date of Certificate.	Arithmetic.	Orthography.	Handwriting.	English Composition.	Précis.	Elements of the Law of Real Property.	Total.
WOODS, OFFICE OF.								
OPEN COMPETITION FOR ONE SITUATION AS SUPPLEMENTARY CLERK IN THE OFFICE OF WOODS.								
December 18, 1877.	**Maximum** -	**200**	**200**	**200**	**200**	**200**	**500**	**1500**
More; W. H. - - -	1878, January 28 - -	192	180	155	135	175	355	1192
No. 2* - - - -	- - - - -	128	170	170	90	140	245	943

* Five other candidates presented themselves, but failed in the obligatory part of the examination.

Table C.—Open Competitions—*continued.*

Name or Number of Candidate, and Date of Competition.	Date of Certificate.	Arithmetic.	Orthography.	Handwriting.	English Composition.	Précis.	Digest of Returns.	Law of Real Property.	Conveyancing.	Latin.	Geography.	English History.	Total.
Woods, Office of—*cont.*													
Open Competition for Two Situations as Junior Clerk in the Office of Woods.													
December 18, 1877.	**Maximum** -	**250**	**200**	**200**	**200**	**200**	**150**	**600**	**600**	**200**	**200**	**200**	**3000**
Round; H. T. - -	1878, January 22 - -	157	190	135	180	144	114	438	562	25	186	185	2316
Howlett; C. E. - -	„ „ 26 - -	168	160	115	140	128	89	408	536	20	92	67	1923
No. 3 - - -	- - - - -	146	190	150	120	132	105	372	362	135	110	91	1913
No. 4 - - -	- - - - -	208	190	150	155	152	100	318	370	20	124	64	1851
No. 5 - - -	- - - - -	172	200	165	80	152	107	306	242	—	131	134	1689
No. 6 - - -	- - - - -	182	195	140	130	176	95	252	168	20	119	91	1568
No. 7* - - -	- - - - -	147	200	125	95	152	120	282	298	—	83	13	1515
Open Competition for One Situation as Junior Clerk in the Office of Woods.													
November 12, 1878.													
More W. H. - -	1878, December 5 - -	231	200	165	155	120	116	410	443	—	165	152	2157
No. 2 - - -	- - - - -	207	198	160	155	160	130	360	300	95	126	91	1982
No. 3† - - -	- - - - -	244	190	165	140	125	132	302	201	60	174	183	1916

* Fourteen other candidates presented themselves, but failed in the obligatory part of the examination.

† Two other candidates presented themselves, but failed in the obligatory part of the examination.

Table C.—Open Competitions—*continued.*

Name or Number of Candidate, and Date of Competition.	Date of Certificate.	Architecture and Principles of Construction.	Knowledge of Material.	Designs and Specifications.	Estimating and Valuing.	Drainage and Water Supply.	Architectural Drawing.	Calculation of Strength of Girders, &c.	Levelling and Chain Surveying.	Engineering Drawing.	Rudimentary Chemistry and Physics.	Total.
WORKS, OFFICE OF.												
OPEN COMPETITION FOR ONE SITUATION AS ASSISTANT TO SURVEYOR IN THE OFFICE OF WORKS.												
March 12, 1878.	**Maximum** -	**200**	**200**	**200**	**200**	**200**	**200**	**200**	**100**	**100**	**100**	**1700**
Tosh ; J. - -	1878, April 3 -	98	101	78	127	112	140	102	40	75	—	873
No. 2* - -	- - - -	125	98	115	144	102	100	62	32	30	—	808

* One other candidate presented himself, but failed in the obligatory part of the examination.

TABLE D.—Showing in detail the Results of Limited Competitions held between 1st January and 31st December 1878.

Note.—The names of the successful candidates are given, and the unsuccessful are designated by numbers. The ciphers indicate subjects in which candidates failed.

Name or Number of Candidate and Date of Competition.	Situation.	Arithmetic and Addition.	Orthography.	Writing from Dictation.	English Composition.	Précis.	Geography.	English History.	Algebra.	Translation from Latin.	Translation from French.	German.	Ancient History.	Translation into Latin.	Translation into Greek.	Shorthand.	Zoology and Anatomy.	Total.
BRITISH MUSEUM.																		
June 11, 1878.	**Maximum** -	200	200	200	200	200	200	200	200	300	200	200	300	400	400	300	600	—
Dryhurst; A. R. - - -	One Assistantship in the Office of the Principal Librarian and Secretary.	147	180	155	160	150	111	145	—	184	180	—	—	—	—	240	—	1652
No. 2 - - - -		186	165	145	187	120	81	91	—	105	175	—	—	—	—	165	—	1420
No. 3 - - - -		194	195	150	100	140	105	68	—	0	165	—	—	—	—	0	—	1117
No. 4 - - - -		162	190	150	73	0	0	—	0	0	145	—	—	—	—	150	—	870
No. 5 - - - -		183	164	100	133	0	0	0	—	0	175	—	—	—	—	—	—	755
June 11, 1878.																		
Wroth; W. W. - - -	One Assistantship in the Department of Coins and Medals.	148	176	140	173	120	79	120	—	206	165	—	224	150	120	—	—	1821
No. 2 - - - -		153	182	140	167	100	0	—	134	206	145	—	149	120	120	—	—	1616
No. 3 - - - -		164	182	110	120	125	66	90	—	180	165	—	160	180	70	—	—	1612
No. 4 - - - -		175	120	110	107	130	0	0	—	0	0	—	0	0	—	—	—	642
June 11, 1878.																		
Bell; F. J. - - -	Two Assistantships in the Department of Zoology.	151	176	140	187	145	124	—	131	100	159	173	—	—	—	—	380	1866
Ridley; S. O. - - -		120	185	140	107	110	118	50	—	195	135	166	—	—	—	—	486	1812
No. 3 - - - -		144	185	120	93	0	104	—	0	0	135	—	—	—	—	—	380	1161
No. 4 - - - -		136	0	140	113	100	0	—	0	0	145	0	—	—	—	—	402	1036
No. 5 - - - -		167	150	125	147	0	0	—	64	0	170	166	—	—	—	—	0	989

Table D.—Limited Competitions—*continued.*

Name or Number of Candidate, and Date of Competition.	Situation.	Arithmetic.	Handwriting.	Spelling.	Total.
CIVIL SERVICE COMMISSION.					
June 6, 1878.	**Maximum - - -**	**100**	**100**	**100**	**300**
Dyer; Lewis - - - - -	One Messengership.	100	85	90	275
No. 2 - - - - - -		82	55	90	227
No. 3 - - - - - -		85	80	0	165
No. 4 - - - - - -		88	65	0	153

Table D.—Limited Competitions—*continued.*

Name or Number of Candidate, and Date of Competition.	Situation.	Arithmetic.	Compound Addition.	Orthography.	Handwriting.	Copying Manuscript.	Indexing.	Digest of Returns into Summaries.	English Composition.	Geography.	English History.	Book-keeping.	Total.
COLONIAL OFFICE.													
March 15, 1878.	**Maximum** -	300	100	400	400	200	200	200	200	200	200	200	2600
Porral; J. - - -	A Third Class Clerkship in Gibraltar Civil Service.	154	50	290	320	176	175	195	50	37	37	74	1558
No. 2 - - - -		188	60	260	290	155	120	190	50	82	56	0	1451
No. 3 - - - -		0	0	320	290	200	180	140	80	51	63	0	1274
No. 4 - - - -		0	0	0	300	64	115	106	0	26	24	64	699
No. 5 - - - -		0	0	0	0	84	180	140	60	37	63	0	564
September 17, 1878.													
Aitken; R. - - -	Two Third Class Clerkships and one Supplementary Clerkship in Gibraltar Civil Service.	136	14	315	300	170	110	110	139	60	76	24	1454
Stoneham; W. G. - -		178	14	395	250	80	75	93	90	37	45	0	1257
King; C. W. R. - -		125	25	336	245	30	110	133	65	57	58	38	1222
No. 4 - - - -		179	24	270	260	0	115	135	35	57	39	43	1157
No. 5 - - - -		0	0	0	270	30	55	120	25	39	0	44	790
No. 6 - - - -		0	0	0	270	0	45	96	45	33	5	32	526

TABLE D.—Limited Competitions—*continued.*

Name or Number of Candidate, and Date of Competition.	Situation.	Arithmetic.	Orthography.	Handwriting.	Intelligence (in Dictation and Orthographical Paper).	English Composition.	Précis.	Latin.	Greek.	French.	German.	Total for Obligatory Subjects.	Pure Mathematics.	Mixed Mathematics.	Ancient History.	Modern History.	Geography.	Constitutional Law.	International Law.	Political Economy.	Geology.	Civil Engineering.	Surveying.	Total.
COLONIAL OFFICE.																								
January 15, 1878.	**Maximum** -	250	300	200	100	200	200	300	300	300	300	1850	300	300	400	400	200	200	200	200	200	200	200	3050
Edge; J. G. - - -	Two Ceylon Writerships.	181	255	165	95	155	100	245	—	—	240	1436	—	—	250	—	124	117	130	125				2182
Booth; L. W. - - -		202	300	170	100	170	115	250	240			1547			140		117	101	127	115				2147
No. 3 - - - -		174	300	150	100	155	135	200	235			1449			276		99	89	112	76				2101
No. 4 - - - -		213	0	140	95	130	120	210	245			1153			275		63	119	121	116				1847
No. 5 - - - -		114	295	160	100	160	130	285	260			1504					89	147	91					1831
No. 6 - - - -		203	270	165	90	170	0	145	—	130		1173	—	—	—	155	82	58	90	73				1631
No. 7 - - - -		208	255	190	100	150	110	160	5	—	—	1173	74	22	245	—	109	—	—	—				1623
No. 8 - - - -		188	255	170	100	140	130	0	—	51	—	983	31	36	—	184	118	—	—	—				1352
No. 9 - - - -		14	290	105	95	145	145	150	0	—	—	930	—	—	75	—	5	15	84	39				1148
January 15, 1878.																								
No. 1 (*Rejected on ground of health.*	Two Cadetships in the Straits Settlements.	244	240	170	90	140	130	180	—	222		1416	182	210	—	235	108	—	—	—	—	—	—	2151
Powell; F. - - -		223	195	125	100	160	125	220	—	169		1317	204	147	255	—	94	—	—	—	—	—	—	2017
Gilbert-Cooper; A. E. -		211	295	155	100	160	105	130	—	111		1267	111	65	—	197	67	—	—	—	—	—	—	1707
No. 4 - - - -		169	250	130	90	120	105	180	—	189		1233	—	—	188	—	51	—	—	—	79	28	64	1643
No. 5 - - - -		8	255	140	90	170	105	250	150	—		1160	—	—	—	41	82	24	60	26	—	—	—	1393
No. 6 - - - -		202	165	115	100	110	100	40	—	112		904	104	71	—	—	—	61	98	97	—	—	—	1335
No. 7 - - - -		116	285	145	90	120	115	160	0	—		1031	—	—	—	30	32	36	51	36	—	—	—	1216
No. 8 - - - -		165	180	170	90	90	100	0	—	9		795	26	—	—	—	21	—	—	—	—	—	—	842
April 9, 1878.																								
Twigg; T. McC. - -		188	174	160	100	170	155	213	175	—		1335	—	—	315	—	152	109	99	124	—	—	—	2184
Short; E. M. de C. - -		214	244	150	100	130	145	228	—	191		1402	75	121	290	—	130	—	—	—	—	—	—	2018
Vigors; C. T. D. - -		176	246	150	100	130	130	198	—	232		1362	—	—	—	170	84	98	107	123	—	—	—	1944
No. 4 - - - -		137	225	135	95	120	130	243	155	—		1240	—	—	280	—	80	86	103	124	—	—	—	1913
No. 5 - - - -		142	225	150	100	170	120	205	150	—		1262	—	—	255	—	108	99	120	68	—	—	—	1912
No. 6 - - - -		0	170	145	100	145	135	251	200	—			—	—	—	235	150	101	135	127	—	—	—	1894

continued.

TABLE D.—Limited Competitions—*continued.*

Name or Number of Candidate, and Date of Competition.	Situation.	Arithmetic.	Orthography.	Handwriting.	Intelligence (in Dictation and Orthographical Paper).	English Composition.	Précis.	Latin.	Greek.	French.	German.	Total for Obligatory Subjects.	Pure Mathematics.	Mixed Mathematics.	Ancient History.	Modern History.	Geography.	Constitutional Law.	International Law.	Political Economy.	Geology.	Civil Engineering.	Surveying.	Total.
COLONIAL OFFICE.																								
April 9, 1878—*cont.*	**Maximum** -	250	300	200	100	200	200	300	300	300	300	1850	1300	300	400	400	200	200	200	200	200	200	200	3050
No. 7 - - - -	Three Ceylon Writerships —*cont.*	198	270	130	100	140	135	209	190	—	—	1,372	89	135	—	—	—	73	78	119	—	—	—	1866
No. 8 - - - -		157	300	160	100	150	0	146	—	133	—	1,146	—	—	—	215	152	101	142	93	—	—	—	1849
No. 9 - - - -		0	195	145	100	120	125	250	185	—	—	1,120	—	—	290	—	70	75	82	60	—	—	—	1697
No. 10 - - - -		183	285	140	100	140	155	171	185	—	—	1,359	45	122	100	—	62	—	—	—	—	—	—	1688
No. 11 - - - -		201	234	140	100	140	140	0	—	94	—	1,049	—	—	—	300	170	—	—	—	131	—	0	1650
No. 12 - - - -		114	245	140	100	120	125	140	—	168	—	1,152	—	—	—	190	50	63	104	68	—	—	—	1627
No. 13 - - - -		170	290	135	80	120	145	116	—	224	—	1,280	71	161	20	—	—	—	—	—	—	—	—	1532
No. 14 - - - -		186	150	140	85	110	110	0	—	59	—	840	20	—	—	30	92	—	—	78	—	—	—	1060
September 1878.																								
Saxton; G. - - -	Two Ceylon Writerships and Two Hong Kong Cadetships.	183	270	155	100	120	168	218	244	—	—	1458	221	168	315	—	96	—	—	—	—	—	—	2358
Maclean; J. - -		213	265	170	100	150	108	209	—	165	—	1380	233	258	—	—	—	131	126	100	—	—	—	2228
Goldberg; W. F. - -		178	265	160	100	120	100	196	254	—	—	1368	—	—	300	—	37	98	97	102	—	—	—	2002
Egerton; W. - -		235	265	140	100	120	132	0	—	185	—	1177	162	188	—	—	—	141	139	136	—	—	—	1943
No. 5 - - - -		193	255	135	95	90	108	154	—	180	—	1210	—	—	271	—	83	138	130	74	—	—	—	1906
No. 6 - - - -		183	260	130	100	170	144	0	—	175	—	1162	214	205	—	198	58	—	—	—	—	—	—	1837
No. 7 - - - -		143	230	140	100	120	138	145	—	—	230	1246	—	—	—	253	80	69	72	101	—	—	—	1821
No. 8 - - - -		170	255	150	100	120	102	123	115	—	—	1135	—	—	292	—	61	121	109	85	—	—	—	1803
No. 9 - - - -		195	0	170	90	100	138	110	198	—	—	1001	—	—	—	348	74	143	134	91	—	—	—	1791
No. 10 - - - -		195	250	140	100	140	150	166	0	—	—	1141	166	156	—	—	—	—	—	—	144	48	110	1765
No. 11 - - - -		175	255	170	100	110	168	0	—	160	—	1138	—	—	—	245	94	108	114	65	—	—	—	1764
No. 12 - - - -		195	230	120	100	110	144	103	137	—	—	1139	177	90	—	—	—	54	62	144	—	—	—	1666
No. 13 - - - -		231	230	130	100	90	126	0	—	120	—	1027	193	176	—	—	—	—	—	—	26	52	66	1540
No. 14 - - - -		148	245	110	90	90	120	0	—	115	—	918	—	—	—	154	87	69	85	94	—	—	—	1407
No. 15 - - - -		143	0	100	80	0	126	156	143	—	—	748	—	—	257	—	62	99	96	120	—	—	—	1382
No. 16 - - - -		178	282	130	100	90	132	0	—	155	—	1067	—	—	—	86	16	71	88	36	—	—	—	1384
No. 17 - - - -		108	265	130	100	80	0	98	—	160	—	941	114	72	—	105	64	—	—	—	—	—	—	1296
No. 18 - - - -		0	295	140	100	150	144	0	—	100	—	929	—	—	33	—	84	0	56	5	—	—	—	1107

TABLE D.—Limited Competitions—*continued.*

Name or Number of Candidate, and Date of Competition.	Situation.	Arithmetic and Addition.	Orthography.	Handwriting.	Intelligence (in Dictation and Orthographical Paper).	English Composition.	Précis.	Geography.	British History.	Latin.	Criminal Law.	Law of Evidence.	Total.
CONSTABULARY (IRELAND).													
January 8, 1878.													
Maximum -		200	150	150	100	200	150	150	200	200	150	150	1800
Dagg; G. E. - - - -	One Constabulary Cadetship.	166	125	125	100	170	105	121	171	118	84	121	1406
No. 2 - - - -		174	110	120	100	150	95	124	147	80	140	118	1353
No. 3 - - - -		196	140	130	100	170	85	87	97	0	95	106	1206
No. 4 - - - -		170	110	100	100	140	88	122	114	e	80	91	1115
No. 5 - - - -		128	0	80	80	80	80	75	0	0	0	0	523
No. 6 - - - -		0	0	90	70	125	0	90	0	.0	93	0	468
May 21, 1878.													
Roughan; M. - - -	One Cadetship.	145	140	105	100	120	105	82	119	145	100	122	1283
No. 2 - - - -		177	115	120	100	140	125	128	107	75	50	50	1187
No. 3 - - - -		134	130	105	100	130	115	72	0	0	50	62	898
No. 4 - - - -		108	105	100	85	80	90	126	86	0	62	80	842
No. 5 - - - -		140	.0	120	85	110	90	94	0	75	0	0	714
September 24, 1878.													
Lilly; C. J. - - -	Four Cadetships.	180	140	100	100	180	95	108	126	145	75	86	1335
Chatterton; S. D. S. - -		174	100	110	100	180	85	88	80	200	88	93	1298
Brooke; J. T. - - -		179	150	90	100	150	80	87	120	185	61	79	1281
Tyacke; E. P. - - -		189	135	110	100	130	75	66	83	180	76	95	1239
No. 5 - - - -		186	140	130	100	170	105	111	66	180	0	80	1188
No. 6 - - - -		200	140	90	100	140	110	109	107	0	75	98	1169
No. 7 - - - -		166	120	85	95	140	95	84	66	115	78	98	1142
No. 8 - - - -		121	110	110	100	100	75	90	99	110	87	68	1070
No. 9 - - - -		178	120	100	95	66	0	103	80	125	0	0	867
No. 10 - - - -		111	130	100	100	100	0	0	0	0	79	84	704
No. 11 - - - -		133	0	80	90	60	0	0	0	0	0	0	363
No. 12 - - - -		118	0	75	75	0	0	0	0	0	0	0	268

TABLE D.—Limited Competitions—*continued.*

Name or Number of Candidate, and Date of Competition.	Situation.	Arithmetic.	Orthography.	Handwriting.	Intelligence (in Dictation and Orthographical Paper).	English Composition.	Précis.	French.	Latin.	General Intelligence.	Total of Obligatory Subjects.	Geography.	History of Europe.	Constitutional History of England.	Geometry.	Greek.	Italian.	German.	Total.
FOREIGN OFFICE.																			
May 14, 1878.	**Maximum**	**200**	**200**	**200**	**100**	**200**	**300**	**400**	**300**	**100**	**2000**	**150**	**200**	**200**	**150**	**300**	**300**	**300**	**3600**
Langley; W. L. F. D.	One Clerkship	185	190	150	100	120	255	306	175	60	1541	77	88	114	119	—	146	222	2307
No. 2 - -		166	200	140	100	110	185	290	180	75	1446	72	61	84	108	120	80	158	2129
No. 3 - -		164	180	145	100	130	225	254	145	60	1403	63	82	96	112	65	105	59	1985
No. 4 - -		189	197	150	100	110	160	284	0	65	1255	74	33	97	117	—	162	198	1931
No. 5 - -		115	145	0	100	100	0	334	0	55	849	47	53	44	33	—	146	169	1341
No. 6 - -		0	170	120	100	100	0	0	0	0	490	39	12	—	—	—	—	197	738
No. 7 - -		0	100	160	100	0	0	0	0	45	405	35	10	56	—	—	110	—	616
Dec. 12, 1878.																			
De Bernhardt; G. J. L. V. F.	One Clerkship in the Librarian's Department.	153	105	145	100	75	150	316	105	40	1189	106	52	62	69	0	—	—	1478
No. 2 - -		0	190	135	100	66	210	223	0	75	999	126	84	95	62	—	—	—	1366
No. 3 - -		0	130	140	95	0	200	0	0	C	565	37	5	—	0	—	—	—	607
No. 4 - -		0	0	110	90	0	180	0	0	45	425	—	—	—	—	—	—	—	425

TABLE D.—Limited Competitions—*continued.*

Name or Number of Candidate, and Date of Competition.	Situation.	Arithmetic.	Orthography.	Handwriting.	English Composition.	Precis.	Political Economy.	Mathematics.	Latin.	Greek.	French.	Heat.	Total.
HOME OFFICE.													
April 30, 1878.	**Maximum** - -	**200**	**200**	**200**	**200**	**200**	**200**	**200**	**200**	**200**	**200**	**200**	**2200**
Cresswell; G. G. B. -	A Junior Sub-Inspectorship of Factories.	128	155	130	155	160	94	108	—	—	125	—	1055
No. 2 - - -		126	190	140	130	105	96	—	120	80	58	0	1045
No. 3 - - -		132	200	130	160	145	72	—	0	—	123	—	962

Table D.—Limited Competitions—*continued.*

Name or Number of Candidate, and Date of Competition.	Department and Situation.	Arithmetic and Addition.	Orthography.	Handwriting.	Total.
PRISONS SERVICE, ENGLAND. *May* 24, 1878.	**Maximum** - -	**250**	**100**	**100**	**450**
Allan; William - - -	Two Clerkships in the Convict Service.	227	96	80	403
Laker; E. G. - - - -		222	100	80	402
No. 3 - - - - -		212	90	65	367
No. 5 - - - - -		221	76	70	367
No. 6 - - - - -		213	78	70	361
No. 7 - - - - -		192	82	80	354
No. 8 - - - - -		182	96	65	343
No. 9 - - - - -		186	86	70	342
No. 10 - - - - -		182	94	60	336
No. 11 - - - - -		175	78	75	328
No. 12 - - - - -		156	90	80	326
No. 13 - - - - -		164	84	75	323
No. 14 - - - - -		155	92	75	322
No. 15 - - - - -		148	64	75	287
No. 16 - - - - -		227	0	55	282
No. 17 - - - - -		188	0	60	248
No. 18 - - - - -		180	0	65	245
No. 19 - - - - -		155	0	70	225
No. 20 - - - - -		165	0	50	215
No. 21 - - - - -		146	0	60	206
No. 22 - - - - -		0	80	80	160
No. 23 - - - - -		0	80	75	155
No. 24 - - - - -		0	68	70	138
No. 25 - - - - -		0	0	80	80
		0	0	50	50

List of all Persons for whom Certificates of Qualifications have been granted by the Civil Service Commissioners for Clerkships and similiar Appointments, between 1st January 1878 and 31st December 1878.

† Candidates whose names are preceded by this sign (†) obtained appointments as the result of *limited competition*.

‡ Candidates whose names are preceded by this sign (‡) obtained appointments as the result of *open competition*.

vii. Candidates to whose names these figures are prefixed were certificated under Clause vii. of the Order in Council of 4th June 1870.

xii. Candidates to whose names these figures are prefixed were writers appointed exceptionally to Men Clerkships of the Lower Division under the provisions of Clause xii. of the Order in Council of 12th February 1876, and certificated under Clause vii. of the Order in Council of 4th June 1870.

Name.	Department and Situation.		Date of Certificate.
	Department.	Situation.	
A.			1878.
‡Abbott; Arthur Melton -	Inland Revenue -	Assistant of Excise -	September19.
vii. Abbott; Walter - -	Board of Trade -	Shipwright Surveyor -	February 1.
‡Adams; Henry James -	- - - -	Boy Clerk, Lower Division	January 16.
Adams; James Fleming -	Post Office - -	Provincial Clerk - -	October 17.
Adie; John - - -	Do. - -	Do. - - -	August 9.
Aitken; John - -	Do. - -	Do. - - -	August 9.
Alderson; William Walter	Do. - -	Do. - - -	October 30.
Alexander; Charles -	Do. - -	Do. - - -	March 23.
†Allan; William - -	Convict Service -	Clerk in a Prison - -	July 1.
Allaway; Charles Tinson -	Post Office - -	Provincial Clerk - -	September23.
vii. Allaway, James Thomas	Do. - -	Postmaster (Bedale) -	May 22.
vii. Allen; John Higgins -	Charity Commission	First Class Clerk, Junior Division	December 12.
‡Allman; Charles - -	Customs - -	Out-door Officer - -	July 2.
†Allport; Susannah Sarah -	Post Office - -	Female Clerk Receiver and Accountant-General's Office	February 22.
‡Andersen; Joseph -	- - - -	Clerk, Lower Division -	August 17.
vii. Anderson; Robert -	Home Office - -	Secretary to Prison Commission	December 13.
Ann; William - -	Post Office - -	Provincial Clerk - -	August 16.
‡Apted; William John French.	- - - -	Clerk, Lower Division -	November 23.
Arkless; Harry William -	Post Office - -	Provincial Clerk - -	September 7.
vii. Armit; James Napier -	Board of Trade -	Shipwright Surveyor -	February 1.
Armstrong; Andrew Charles	Factory Inspectors Department	Junior Sub-Inspector of Factories	March 19.
‡Armstrong; Ernest William.	- - - -	Clerk, Lower Division -	July 30.
xii. Armstrong; William Augustus Frederick.	- - - -	Do. - - -	September20.
‡Arrowsmith; William Robson.	Inland Revenue -	Assistant of Excise -	September26.
Arscott; Edwin James -	Post Office - -	Provincial Clerk - -	October 31.
Ash; Joseph Henry -	Do. - -	Do. - - -	March 1.
Ashby; Roger - -	Do. - -	Do. - - -	September25.
Asquish: William Charles	Do. - -	Do. - - -	July 15.
‡Atherton; Richard -	- - - -	Clerk, Lower Division -	November 23.
‡Attwater; Henry Peck -	- - - -	Boy Clerk, Lower Division	July 31.
‡Austen; George Henry -	Admiralty - -	Assistant Schoolmaster in one of Her Majesty's Dockyards	April 5.
Austen; John - -	Post Office - -	Provincial Clerk -	August 20.
‡Austin; Francis - -	Inland Revenue -	Assistant of Excise -	September30.
B.			
xii. Bailey; James Bert Bowden.	- - - -	Clerk, Lower Division -	November 8
‡Bailey; John - -	Customs - -	Out-door Officer - -	June 25.

Name.	Department and Situation.		Date of Certificate.
	Department.	Situation.	
			1878.
vii. Baird; Christina Mackay	Post Office - -	Female Clerk, Accountant's Office (Edinburgh).	October 25.
xii. Baker; Benjamin Arthur	- - - -	Clerk, Lower Division -	March 5.
Baker; James Townsend -	Post Office - -	Provincial Clerk - -	December 19.
Baker; Priscilla - -	Do. - -	Do. - - -	August 7.
vii. Baker; Thomas Butler	Registry of Deeds (Ireland).	Temporary Clerk - -	September 6.
‡Baker; William - -	- - - -	Clerk, Lower Division -	August 7.
Baker; Walter Frederick -	Post Office - -	Provincial Clerk - -	March 4.
†Bangham; Henry William	Convict Service -	Clerk in a Prison - -	June 19.
Banks; Joseph - -	Post Office - -	Provincial Clerk - -	March 8.
‡Barker; Arthur - -	- - - -	Clerk, Lower Division -	December 4.
Barlow; Norman - -	Post Office - -	Provincial Clerk - -	July 26.
‡Barnett; Ernest Frederick	Inland Revenue -	Assistant of Excise -	February 23.
xii. Barry; Frederic Randolph.	- - - -	Clerk, Lower Division -	November 7.
‡Barry; James - -	Inland Revenue -	Assistant of Excise -	February 26.
xii. Bartlett; Henry Gregory.	- - - -	Clerk, Lower Division -	September 20.
Barton; William - -	Post Office - -	Provincial Clerk - -	November 6.
Barwick; Ebenezer Frederick.	Do. - -	Do. - - -	May 7.
‡Batchelor; Harry - -	Treasury - -	Supplementary Clerk, Solicitor's Office.	August 6.
‡Bate; Edward Reginald -	Post Office - -	Professional Clerk, Solicitor's Office (Dublin).	May 16.
‡Bates; Charles Bothwell -	Inland Revenue -	Assistant of Excise -	September 13.
‡Bayle; Samuel Jacob -	Customs - -	Out-door Officer - -	April 8.
Baynes; Herbert Morton Walker.	High Court of Justice	Clerk, Associate's Office Exchequer Division.	December 18.
vii. Beard; Henry Goodlake	India Office - -	Second Class Clerk -	August 28.
Beaton; Murdo Duncan -	Post Office - -	Provincial Clerk - -	May 4.
Beaufoy; Thomas - -	Do. - -	Do. - - -	November 12.
‡Beaumont; John Joseph -	Inland Revenue -	Assistant of Excise -	September 16.
‡Beckerson; Robert Evan -	- - - -	Clerk, Lower Division -	November 28.
†Bell; Francis Jeffrey -	British Museum -	Assistant (Zoological Department) London.	July 30.
Bell; John - - -	Post Office - -	Provincial Clerk - -	November 2.
Bell; John - - -	Do. - -	Do. - - -	November 8.
vii. Bell; Robert - -	Board of Trade -	Shipwright Surveyor -	February 1.
Bell; Robert - - -	Post Office - -	Provincial Clerk - -	November 6.
‡Bennett; Charles Edmund	- - - -	Clerk, Lower Division -	July 26.
Bennett; Henry John -	Post Office - -	Provincial Clerk - -	May 13.
Bennett; William Arthur -	Do. - -	Do. - - -	January 11.
‡Bennett; William Hart -	- - -	Clerk, Lower Division -	November 18.
Bentley; Samuel - -	Post Office - -	Sub-Postmaster (Aldershot Farnboro' Station.	November 22.
‡Berisford; Thomas -	Customs - -	Out-door Officer - -	September 21.
Berry; James. - -	Post Office - -	Provincial Clerk - -	March 29.
xii. Berry; John Arthur -	- - - -	Clerk, Lower Division -	September 20.
xii. Bescoby; Francis Charles.	- - - -	Do. - - -	November 7.
Billsborough; Thomas Henry.	Post Office - -	Provincial Clerk - -	December 18,
‡Binet; Albert Wadsworth	- - - -	Clerk, Lower Division -	July 31.
Bing; Thomas Fill - -	Post Office - -	Provincial Clerk - -	October 17.
xii. Bingham; Charles Douglas.	- - - -	Clerk, Lower Division -	September 26.
Bird; George Simkin -	Post Office - -	Provincial Clerk - -	October 10.
Birt; William Thomas -	Do. - -	Do. - - -	November 21.
Bisco; Arnold Harry -	Do. - -	Do. - - -	October 17.
vii. Bisset; William Harvey	Board of Trade -	Engineer Surveyor -	February 1.
‡Black; David - -	Customs - -	Out-door Officer - -	June 27.
Black; John - - -	Post Office - -	Provincial Clerk - -	October 28.
‡Black; John George -	Inland Revenue -	Assistant Surveyor of Taxes.	July 31.
Blanchett; John - -	Post Office - -	Provincial Clerk - -	September 12.
Bland; William - -	Do. - -	Do. - - -	September 13.
Blanthorn; William -	Do. - -	Do. - - -	August 27.
‡Blessley; Henry George -	Inland Revenue -	Assistant of Excise -	October 14.
Blight; Francis James -	Copyhold Inclosure and Tithe Commission.	Assistant Record Keeper -	October 5.
vii. Blight; Gilbert Henry	- - - -	Clerk, Lower Division -	March 16.
Bloomfield; Henry Dawkes	Post Office - -	Provincial Clerk - -	November 19.
Bluett; John - -	Do. - -	Do. - - -	May 4.
‡Blundell; Frederick Horatio.	Inland Revenue -	Assistant of Excise -	September 17.
‡Boden; Matthew Henry -	Do. - -	Do. - - -	February 21.
Boden; William Samuel -	Post Office - -	Provincial Clerk - -	April 16.
‡Boehmer; Ernest Edward Boyce.	- - - -	Clerk, Lower Division -	December 3.

Name.	Department and Situation.		Date of Certificate.
	Department.	Situation.	
			1878.
vii. Bone; Henry Spottiswoode.	Board of Trade -	Engineer Surveyor -	February 1.
vii. Booth; Denis - -	- - - -	Clerk, Lower Division -	March 20.
†Booth; Leonard William -	Colonial Office -	Ceylon Writer - -	March 12.
‡Borthwick; George Sidney	- - - -	Clerk, Lower Division -	November 26.
‡Bossence; Francis George	Customs - -	Out-door Officer - -	July 2.
vii. Bower; Frederick George Nott.	Metropolitan Police Courts.	Clerk - - -	May 13.
Bowman; Arthur - -	Post Office - -	Provincial Clerk - -	October 23.
Bown; Herbert John -	Do. - -	Do. - - -	June 6.
‡Bowser; Joseph Edward -	- - - -	Clerk, Lower Division -	August 8.
†Box; Elizabeth Ann -	Post Office - -	Female Returner - -	September 28.
‡Boyd; Thomas John -	Inland Revenue -	Third Class Clerk, Solicitor's Office (Edinburgh).	November 30.
xii. Boylan; Frederick Joseph.	- - - -	Clerk, Lower Division -	March 5.
‡Boyle; Marcus - -	Customs - -	Out-door Officer - -	October 9.
‡Boyle; William Austin -	- - - -	Clerk, Lower Division -	August 9.
‡Bradley; Abraham Anthony.	Customs - -	Out-door Officer - -	October 31.
Brady; Maria Louisa -	Post Office - -	Postmistress (Dromod) -	July 11.
‡Bramwell; Herbert Edward.	- - - -	Boy Clerk, Lower Division	August 20.
Brand; Arthur George -	House of Commons -	Supernumerary Clerk, Committee Office.	March 1.
vii. Brewer; John Sherren	Board of Trade -	Engineer Surveyor -	February 1.
Brice; Thomas Reynish -	Post Office - -	Provincial Clerk - -	February 11.
‡Bridgeman; Benjamin James.	Treasury - -	Supplementary Clerk, Solicitor's Office.	April 12.
Briggs; James Henry -	Post Office - -	Provincial Clerk - -	October 17.
Briggs; Thomas - -	Do. - -	Do. - - -	March 26.
‡Briggs; William Henry Dawson.	- - - -	Clerk, Lower Division -	November 20.
Bright; Adolphus Herbert	Post Office - -	Provincial Clerk - -	October 17.
Brinson; William - -	Do. - -	Do. - - -	November 15.
xii. Bristow; George Frederick.	- - - -	Clerk, Lower Division -	September 20.
‡Brockbank; Charles William.	Inland Revenue -	Assistant of Excise -	September 9.
Brocklebank or Hodgson; John.	Post Office - -	Provincial Clerk - -	September 13.
Brook; Samuel - -	Do. - -	Do. - - -	July 15.
‡Brooks; Frederick Richard	- - - -	Clerk, Lower Division -	November 25.
‡Brosnan; Jeremiah -	Inland Revenue -	Assistant of Excise -	September 16.
†Brown; Constance - -	Post Office - -	Female Clerk, Receiver and Accountant General's Office.	September 6.
Brown; Edward - -	Do. - -	Provincial Clerk - -	November 23.
†Brown: Elizabeth Mary -	Do. - -	Female Returner - -	September 17.
‡Brown; Ernest Aldridge -	- - - -	Clerk, Lower Division -	November 26.
vii. Brown; Henry Edward	Board of Trade -	Shipwright Surveyor -	February 1.
Brown; James - -	Post Office - -	Provincial Clerk - -	August 9.
xii. Brown; James - -	- - - -	Clerk, Lower Division -	September 20.
‡Brown; Peter Thomson -	- - - -	Do. - - -	December 12.
Brown; Robert - -	Post Office - -	Provincial Clerk - -	February 1.
Brown; William George James.	Do. - -	Do. - - -	January 7.
xii. Brown; William Samuel	- - - -	Clerk, Lower Division -	September 20.
†Browne; Rosa Helen -	Post Office - -	Female Clerk, Savings Bank Department.	December 23.
vii. Browne, Willis - -	India Office - -	Second Class Clerk -	August 28.
Brunton; John - -	Post Office - -	Provincial Clerk - -	August 9.
‡Bryant; Charles Henry -	- - - -	Boy Clerk, Lower Division	August 7.
Buchanan; Daniel Filshie -	Post Office - -	Provincial Clerk - -	August 9.
vii. Buck; Edward George -	Convict Service -	Schoolmaster - -	February 19.
‡Bugby; Alfred - -	- - - -	Clerk, Lower Division -	July 31.
vii. Buller; Henry Francis	- - - -	Do. - - -	February 6.
Bullock; Robert - -	Post Office - -	Provincial Clerk - -	November 21.
‡Burden; William James -	Customs - -	Out-door Officer - -	August 6.
Burke; William - -	Public Works Office (Ireland).	Timekeeper, Storekeeper, Clerk, and Cattle Account Keeper, Phœnix Park.	March 12.
vii. Burnaby; Hugo Beaumont	Board of Trade -	Nautical Surveyor -	February 1.
Burne; Henry Austin -	Post Office - -	Provincial Clerk - -	December 12.
‡Burns; Thomas - -	Customs - -	Out-door Officer - -	October 12.
‡Burns; William - -	- - - -	Clerk, Lower Division -	November 29.
Burrow; George - -	Post Office - -	Provincial Clerk - -	February 11.
Burrows; William - -	Do. - -	Do. - - -	April 13.
‡Burton; Frederick - -	Inland Revenue -	Assistant of Excise -	September 16.
xii. Burtt; Walter - -	- - - -	Clerk, Lower Division -	June 24.

Name.	Department and Situation.		Date of Certificate.
	Department.	Situation.	
			1878.
vii. Bushby; Robert -	Board of Trade -	Engineer Surveyor -	February 1.
xii. Bussell; William -	- - - -	Clerk, Lower Division -	March 5.
‡Bustard; Henry Thomas -	- - - -	Do. - - -	November 20.
vii. Butchard; Fanny Jane	Post Office - -	Female Clerk Accountant's Office (Edinburgh).	October 25.
‡Butcher; Arthur Titus -	Customs - -	Out-door Officer - -	March 9.
‡Butler; James - -	Inland Revenue -	Assistant of Excise -	September 26.
‡Butler; Michael - -	Customs - -	Out-door Officer - -	March 22.
xii. Buxton; Edward -	- - - -	Clerk, Lower Division -	October 16.
‡Buxton; Henry - -	- - - -	Do. - - -	July 30.
‡Byrne; Edward - -	Customs - -	Out-door Officer - -	July 6.
Byrne; Kate - - -	Post Office - -	Postmistress (Tuam) -	August 1.
C.			
xii. Cahill; James Alban -	- - - -	Clerk, Lower Division -	November 7.
Calter; John - - -	Post Office - -	Provincial Clerk - -	October 15.
Cameron; William Kennedy	Do. - -	Do. - - -	November 28.
Camm; Theophilus John -	Do. - -	Do. - - -	February 5.
Campbell; John Lawrence -	Prison Service -	Clerk of Works, Her Majesty's Prison, Portsmouth.	September 21.
Campbell; William Robert	Post Office - -	Provincial Clerk - -	February 5.
Canning; John James -	Do. - -	Do. - - -	January 7.
vii. Cantrell; Robert -	Chief Secretary's Office (Ireland).	Chief Clerk, Veterinary Department.	November 20.
vii. Carlisle; George -	Board of Trade -	Engineer Surveyor -	February 1.
‡Carmody; Edmond -	Customs - -	Out-door Officer - -	July 20.
‡Carmody; Edmond -	Inland Revenue -	Assistant of Excise -	September 11.
‡Carmody; James - -	Customs - -	Out-door Officer - -	October 3.
‡Carroll; Daniel - -	- - - -	Clerk, Lower Division -	December 3.
‡Carroll; Patrick - -	Customs - -	Out-door Officer - -	January 16.
xii. Carter; Edmund John Cresswell.	- - - -	Clerk, Lower Division -	October 16.
Carter; Samuel - -	Post Office - -	Provincial Clerk - -	September 16.
vii. Carver; Isaac - -	Board of Trade -	Shipwright Surveyor -	February 1.
‡Casey; Edmond - -	Customs - -	Out-door Officer - -	October 30.
‡Cassell; Frederick William	Inland Revenue -	Assistant of Excise -	September 12.
Caston; William George -	Post Office - -	Provincial Clerk - -	December 18.
‡Chalmers; James - -	Inland Revenue -	Assistant of Excise -	September 6.
†Champ; Augusta Mary -	Post Office - -	Female Clerk, Savings Bank Department.	October 25.
vii. Champ; Edith Marion	Do. - -	Female Returner - -	July 24.
Chanter; Charles - -	Do. - -	Provincial Clerk - -	October 7.
Chapman; Francis - -	Do. - -	Do. - - -	November 25.
‡Chase; Joseph James -	Treasury - -	Supplementary Clerk, Solicitor's Office.	July 1.
Cherry; David Alexander -	Post Office - -	Provincial Clerk - -	August 9.
Cherry; John Kerr - -	Do. - -	Do. - - -	August 2.
xii. Chestle; Charles -	- - - -	Clerk, Lower Division -	September 20.
Chilcote; Henry Joseph -	Post Office - -	Provincial Clerk - -	October 1.
‡Child; Joseph Albert Edward.	- - -	Boy Clerk, Lower Division	July 31.
‡Chubb; Percival Ashley -	- - -	Clerk, Lower Division -	November 29.
‡Church; John Wesley -	- - -	Do. - - -	December 5.
Church; Robert Galbraith -	Post Office - -	Postmaster (Carrick-on-Shannon).	August 27.
Clark; Thomas - -	Do. - -	Provincial Clerk - -	November 1.
Clarke; Emily Pattie -	Do. - -	Do. - - -	September 25.
vii. Clarke; Thomas Archer	Board of Trade -	Engineer Surveyor -	February 1.
Clarke; William - -	Post Office - -	Postmaster (Worthing) -	February 21.
‡Cleary; Martin - -	Inland Revenue -	Assistant of Excise -	September 14.
‡Cleary; Martin - -	- - - -	Clerk, Lower Division -	December 5.
Cleugh; John - -	Post Office - -	Provincial Clerk - -	August 27.
‡Cliff; Alfred - -	Patent Office - -	Index and Abridging Clerk.	July 24.
xii. Clinch; Joseph - -	- - - -	Clerk, Lower Division -	November 7.
‡Cluff; William Patrick -	Customs - -	Out-door Officer - -	July 18.
‡Clunan; John Joseph -	- - - -	Clerk, Lower Division -	December 3.
‡Coates; William - -	- - - -	Do. - - -	November 23.
Coats; Thomas James Belshaw.	Post Office - -	Provincial Clerk - -	May 21.
Colbeck; Ann Brown -	Do. - -	Do. - - -	July 4.
†Coles; Richard James -	- - - -	Boy Clerk, Lower Division	July 30.
‡Collins; Jeremiah - -	Customs - -	Out-door Officer - -	March 30.
‡Collins; John - -	- - - -	Clerk, Lower Division -	August 20.
‡Collins; John - -	Inland Revenue -	Assistant of Excise -	September 21.
xii. Colquhoun; George James.	- - - -	Clerk, Lower Division -	November 7.
Colquhoun; William George	Post Office - -	Provincial Clerk - -	August 2.

Name.	Department and Situation.		Date of Certificate.
	Department.	Situation.	
			1878.
Coltherup; Charles Richard	Post Office - -	Provincial Clerk - -	October 30.
xii. Coltson; Edmund Calverley.	- - - -	Clerk, Lower Division -	September 20.
vii. Colvin; James - -	Board of Trade -	Shipwright Surveyor -	February 1.
‡Conaughton; John -	Inland Revenue -	Assistant of Excise -	September 20.
vii. Condell; William -	Registry of Deeds (Ireland).	Temporary Clerk - -	October 30.
‡Cooke; John - -	Customs - -	Out-door Officer - -	October 4.
Coombes; Henry - -	Post Office - -	Provincial Clerk - -	November 21.
‡Cooper; Frank - -	- - - -	Boy Clerk, Lower Division	July 31.
†Cooper; Henry Edward Gilbert.	Colonial Office -	Straits Settlements Cadet	March 23.
Cooper; William White -	Post Office - -	Provincial Clerk - -	January 7.
‡Corbitt; William - -	- - - -	Clerk, Lower Division -	July 27.
‡Cording; Edwin - -	Consular Service -	Student Interpreter (Siam)	March 29.
‡Cornish; Henry William -	Inland Revenue -	Assistant of Excise -	February 23
vii. Cornish; Samuel Tom -	Board of Trade -	Shipwright Surveyor -	February 1.
Corry; Charlie - -	Post Office - -	Provincial Clerk - -	February 8.
‡Corry; John - -	Inland Revenue -	Assistant of Excise -	September 18.
vii. Costelloe; Martin -	Board of Trade -	Shipwright Surveyor -	February 1.
‡Cotter; Thomas - -	Inland Revenue -	Assistant of Excise -	September 17.
‡Cotter; Valentine Crozier	Admiralty - -	Assistant Schoolmaster in one of Her Majesty's Dockyards.	March 30.
‡Cottingham; William -	- - - -	Clerk, Lower Division -	November 26.
‡Coupe; Thomas Archdale Havelock.	Customs - -	Out-door Officer - -	October 25.
‡Cowan; William - -	Office of Works -	Assistant to a Surveyor -	September 3.
Coward; Randulph Lewis -	War Office - -	Clerk in the District Paymaster's Office (London).	July 19.
‡Cox; Bernard Henry -	- - - -	Clerk, Lower Division -	November 26.
‡Cox; Clifford Coltman -	Inland Revenue -	Assistant of Excise -	September 6.
Cox; George Harrison -	House of Lords -	Third Clerk in Crown Office	October 3.
‡Cox; John - - -	Customs - -	Out-door Officer - -	March 5.
xii. Coxall; Walter Charles Linnard.	- - - -	Clerk, Lower Division -	September 25.
‡Crabtree; William - -	Customs - -	Out-door Officer - -	September 5.
Creedon; William Cornelius	Post Office - -	Provincial Clerk - -	October 3.
†Cresswell; Gilfrid George Baker.	Factory Inspectors' Department.	Junior Sub-Inspector of Factories.	June 8.
vii. Cressy; John Zell -	Board of Trade -	Nautical Surveyor -	February 1.
‡Crews; Sidney - -	Customs - -	Out-door Officer - -	October 3.
vii. Croal; Annie Bell -	Post Office - -	Female Clerk, Accountant's Office (Edinburgh).	October 25.
‡Crocker; John Waters -	Customs - -	Out-door Officer - -	September 24.
Crockford; Mary Aquila -	Post Office - -	Provincial Clerk - -	May 11.
‡Crone; David Howat -	Inland Revenue -	Assistant of Excise -	March 2.
Cronin; Daniel - -	Post Office - -	Provincial Clerk - -	September 16.
‡Cronin; James - -	Inland Revenue -	Assistant of Excise -	February 22.
Crookes; George Henry -	Post Office - -	Provincial Clerk - -	November 6.
Crooks; Thomas John -	Do. - -	Do. - - -	November 28.
‡Cross; Edward - -	Inland Revenue -	Assistant of Excise -	September 16.
Cullerne; George Baylie -	Post Office - -	Provincial Clerk - -	July 16.
Gumming; George - -	Do. - -	Do. - - -	July 22.
Cundy; Harry - -	Do. - -	Do. - - -	October 30.
Currie; Donald - -	Do. - -	Do. - - -	August 2.
Curtin; Patrick John -	Do. - -	Do. - - -	September 17.
Cusworth; Richard - -	Do. - -	Do. - - -	October 29.
Cutting; Cleere - -	Do. - -	Do. - - -	December 31.
D.			
Dainty; George Edward Goodall.	Post Office - -	Provincial Clerk - -	August 12.
Dale; William - -	Do. - -	Do. - - -	April 3.
vii. Dalton; William -	Board of Trade -	Shipwright Surveyor -	February 1.
‡Daly; Timothy William -	Inland Revenue -	Assistant of Excise -	September 27.
‡Danaher; William John -	Customs - -	Out-door Officer - -	August 19.
Dancocks; Alfred - -	Post Office - -	Provincial Clerk - -	February 25.
Dand; Martin - -	Do. - -	Do. - - -	December 7.
‡Danter; Frederick Walter	- - - -	Clerk, Lower Division -	July 31.
Davidson; Alexander -	Post Office - -	Provincial Clerk - -	May 21.
Davies; Kate Eliza - -	Do. - -	Do. - - -	March 15.
vii. Davies; Thomas William Henry.	Patent Office - -	Third Class Clerk, Trade Marks Registry.	April 11.
Davies; William Teague -	Post Office - -	Provincial Clerk - -	July 29.
Davis; Charles John -	Do. - -	Do. - - -	August 30.
†Davis; Mary Eleanor -	Do. - -	Female Clerk, Savings Bank Department.	May 15.
Davison; Adam - -	Do. - -	Provincial Clerk - -	October 17.
Davison; Robert - -	Do. -	Do. - - -	October 17.

Name.	Department and Situation.		Date of Certificate.
	Department.	Situation.	
			1878.
xii. Davisson; William -	- - - -	Clerk, Lower Division -	September 20.
‡Davy; Frederick Francis -	- - - -	Do. - - -	July 27.
Dawes; William - -	Post Office - -	Provincial Clerk - -	November 12.
vii. Day; Arthur Somerset	India Office - -	Second Class Clerk -	November 4.
Day; William - -	Post Office - -	Provincial Clerk - -	March 14.
Deane; Charles - -	Metropolitan Police Courts.	Assistant Clerk - -	June 19.
Deans; Ellen Rutherford -	Post Office - -	Provincial Clerk - -	March 29.
†De Bernhardt; Gaston Jules Louis Vincent.	Foreign Office -	Clerk in the Librarian's Department.	December 23.
‡Deer; Edward Joseph -	- - - -	Clerk, Lower Division -	July 31.
Dennis; Harry James -	Post Office - -	Provincial Clerk - -	September 25.
‡Denniss; George Hamson	Inland Revenue -	Law Clerk, Solicitor's Office.	January 17.
xii. Desprez; Charles Edward Carden Soulbieu.	- - - -	Clerk, Lower Division -	September 20.
Dickinson; Tom Fenton -	Post Office - -	Provincial Clerk - -	August 15.
Dicks; Charles - -	Education Office -	Inspectors' Assistant -	March 27.
Dickson; Andrew - -	Post Office - -	Provincial Clerk - -	September 12.
xii. Dickson; William -	- - - -	Clerk, Lower Division -	November 7.
Diffey; John - - -	Post Office - -	Provincial Clerk - -	October 17.
‡Dingle; Robert Walter -	- - - -	Clerk, Lower Division -	July 27.
vii. Dixon; David Dixon -	Board of Trade -	Engineer Surveyor -	February 1.
vii. Dixon; George Phillips	Do. - -	Shipwright Surveyor -	February 1.
Dixon; Robert - -	Post Office - -	Provincial Clerk - -	December 12.
‡Dobson; Henry - -	- - - -	Boy Clerk, Lower Division	August 1.
‡Dodd; James - -	Inland Revenue -	Assistant of Excise -	September 30.
‡Doherty; James - -	Do. - -	Do. - - -	September 17.
‡Donnellan; Owen - -	Customs - -	Out-door Officer - -	January 11.
Donnelly; Walter James -	Post Office - -	Provincial Clerk - -	August 7.
‡Donovan; Patrick - -	Inland Revenue -	Assistant of Excise -	September 5.
xii. Dotterill; James -	- - - -	Clerk, Lower Division -	September 20.
xii. Doudney; David -	- - - -	Do. - - -	October 16.
‡Douglas; Ormond - -	Inland Revenue -	Assistant of Excise -	September 9.
Douty; Colin Sydney -	Post Office - -	Provincial Clerk - -	January 1.
Dowkes; George - -	Do. - -	Do. - - -	October 29.
vii. Dowling; Michael Peter	- - - -	Clerk, Lower Division -	December 24.
Downard; George Edward	Post Office - -	Provincial Clerk - -	December 24.
‡Downey; Thomas George -	- - - -	Clerk, Lower Division -	November 26.
†Dowsing; Douglas Lemuel	Convict Service -	Clerk in a Prison - -	June 18.
‡Draper; Carter - -	- - - -	County Surveyor (Ireland).	May 15.
‡Dromgoole; Alfred Henry	- - - -	Clerk, Lower Division -	November 18.
†Drummond; Jessie White Thomson.	Post Office - -	Female Clerk, Account Branch, Edinburgh.	April 11.
†Dryhurst; Alfred Robert -	British Museum -	Assistant in the Secretary's Department.	July 19.
Duckett; Edmund - -	Post Office - -	Provincial Boy Clerk -	October 17.
‡Duckworth; William Henry	Customs - -	Out-door Officer - -	March 16.
xii. Duplock; Frederick Marten.	- - - -	Clerk, Lower Division -	September 20.
‡Durrant; William Scott -	- - - -	Do. - - -	July 31.
Dymond; William - -	Post Office - -	Provincial Clerk - -	November 23.
‡Dyson; Edward Alfred -	Inland Revenue -	Assistant of Excise -	March 4.
Dyson; John - -	Post Office - -	Provincial Clerk - -	September 17.
E.			
Earl; Edward Henry -	Post Office - -	Provincial Clerk - -	March 29.
Early; Percy William -	Do. - -	Do. - - -	March 23.
Eaton; Charles James -	Do. - -	Do. - - -	October 7.
Edgar; James Bromley -	Do. - -	Do. - - -	September 17.
Edgcombe; Benjamin -	Do. - -	Do. - - -	September 7.
Edgcombe; William Henry	Do. - -	Do. - - -	August 2.
†Edge; James Green -	Colonial Office -	Ceylon Writer - -	February 22.
xii. Edwards; Frederic Thomas.	- - - -	Clerk, Lower Division -	September 20.
‡Edwards; Henry - -	- - - -	Do. - - -	November 23.
vii. Edwards; Henry John	Board of Trade -	Nautical Surveyor -	February 1.
Edwards; Robert Price -	Post Office - -	Provincial Clerk - -	November 27.
‡Edwards; Sidney - -	- - - -	Clerk, Lower Division -	July 30.
vii. Edwicker; William John.	Post Office - -	Assistant in Secretary's Office.	February 8.
‡Egan; George - -	- - - -	Clerk, Lower Division -	November 30.
xii. Eley; Charles - -	- - - -	Do. - - -	September 20.
‡Ellercamp; Herbert McDonald.	- - - -	Do. - - -	November 21.
‡Elliott; Benjamin - -	Inland Revenue -	Assistant of Excise -	February 27.
‡Ellis; Thomas - -	Do. - -	Do. - - -	September 1.
Ellison; Walter Alfred -	Post Office - -	Provincial Clerk - -	November 16.

Name.	Department and Situation.		Date of Certificate.
	Department.	Situation.	
			1878.
‡Emm; Walter - -	- - - -	Clerk, Lower Division -	August 6.
‡Enright; Laurence -	Customs - -	Out-door Officer - -	October 3.
Escott; William Dixon -	Metropolitan Police Courts.	Assistant Clerk - -	July 11.
Etchells; Jabez - -	Post Office - -	Provincial Clerk - -	July 15.
vii. Etheridge; Robert -	British Museum -	First Class Assistant, Department of Geology.	November 4.
Evans; Albert Edward -	Board of Trade -	Deputy Superintendent, Mercantile Marine Office, Cardiff.	January 24.
‡Evans; Charles - -	Customs - -	Out-door Officer - -	October 16.
Evans; Joseph - -	Post Office - -	Provincial Clerk - -	July 15.
‡Evans; Richard - -	- - - -	Clerk, Lower Division -	November 25.
‡Evans; Thomas Cameron -	- - - -	Do. - - -	November 25.
‡Evans; William James -	- - - -	Do. - - -	July 30.
vii. Evatt; Robert William	Board of Trade -	Nautical Surveyor -	February 1.
xii. Everall; Charles Thomas.	- - - -	Clerk, Lower Division -	September 20.
‡Everitt; Thomas Edward	Inland Revenue -	Assistant of Excise -	October 11.
‡Eyles; Alfred - -	- - - -	Clerk, Lower Division -	July 31.
F.			
vii. Fabian; Henry Baker -	Board of Trade -	Engineer Surveyor -	February 1.
Faircloth; John William -	Post Office - -	Provincial Clerk - -	December 3.
vii. Fairrie; John Samuel -	India Office - -	Second Class Clerk -	August 28.
xii. Falkus; Richard Uriah	- - - -	Clerk, Lower Division -	September 28.
xii. Farrell; Edward George	- - - -	Do. - - -	October 16.
Farrell; Patrick - -	Post Office - -	Postmaster (Longford) -	March 14.
‡Farwig; William Charles -	Inland Revenue -	Assistant of Excise -	September 14.
‡Faulkner; Charles Irvine	- - - -	Clerk, Lower Division -	November 25.
Faunt; George - -	Post Office - -	Provincial Clerk - -	November 4.
Faville; William Mark -	Do. - -	Do. - - -	October 31.
‡Feather; Eli - -	Inland Revenue -	Assistant of Excise -	September 13.
vii. Feesey; John - -	Admiralty - -	Hospital Clerk, Royal Naval Hospital, Jamaica.	June 20.
‡Ferguson; John - -	- - - -	Clerk, Lower Division -	December 5.
‡Ferrall; John - -	Customs - -	Out-door Officer - -	August 20.
‡Ferrall; John - -	Inland Revenue -	Assistant of Excise -	September 5.
‡Field; George Willoughby	Do. - -	Do. - - -	September 5.
vii. Fielden; Lumer -	Board of Trade -	Engineer Surveyor -	February 1.
Fielder; Frederick - -	Post Office - -	Provincial Clerk - -	October 30.
‡Fielding; Charles Thomas	Customs - -	Out-door Officer - -	March 22.
Finch; Heber Winstanley -	Post Office - -	Provincial Clerk - -	October 21.
†Finn; John - - -	Convict Service -	Clerk in a Prison - -	June 18.
‡Finter; Henry - -	- - - -	Clerk, Lower Division -	November 26.
xii. Fisher; John Galt -	- - - -	Do. - - -	September 20.
Fitton; Charles - -	Post Office - -	Provincial Clerk - -	July 22.
‡Fitzgerald; Edmund -	- - - -	Clerk, Lower Division -	September 9.
Fleming; William - -	Post Office - -	Provincial Clerk - -	August 2.
†Fletcher; Florence Brooking.	Do. - -	Female Clerk, Savings Bank Department.	September 24.
‡Fletcher; John - -	Inland Revenue -	Assistant of Excise -	September 18.
Fletcher; Lazarus - -	British Museum -	First Class Assistant -	February 2.
‡Flynn; John Donovan -	Customs - -	Out-door Officer - -	July 22.
Flynn; John Lodovico Thomas.	Post Office - -	Provincial Clerk - -	August 16.
‡Foley; Patrick Joseph -	Customs - -	Out-door Officer - -	October 16.
‡Folkard; Walter William	- - - -	Clerk, Lower Division -	July 30.
‡Ford; Frederick John -	- - - -	Do. - - -	December 6.
Ford; Robert - -	Post Office - -	Provincial Clerk - -	August 1.
xii. Forsey; John - -	- - - -	Clerk, Lower Division -	September 20.
Forsyth; John Bowman -	Post Office - -	Provincial Clerk - -	October 17.
‡Forsyth; William - -	Inland Revenue -	Assistant of Excise -	September 7.
Fothergill; Emma Farmer	Post Office - -	Provincial Clerk - -	March 16.
vii. Francis; John - -	Board of Trade -	Engineer Surveyor -	February 1.
Fraser; Alexander - -	Post Office - -	Postmaster (Jarrow) -	September 5.
Fraser; Stewart George -	High Court of Justice	Clerk, Principal Registry, Probate, Divorce, and Admiralty Division.	December 6.
vii. Fraser; William -	Board of Trade -	Shipwright Surveyor -	February 1.
Fraser; William - -	Post Office - -	Provincial Clerk - -	July 29.
vii. Freeman; Denis -	Registrar-General's Office (Ireland).	Fourth Class Clerk -	June 1.
vii. Freeman; Frederick -	Post Office - -	Dispensing Assistant -	October 17.
‡Freile; Samuel - -	Customs - -	Out-door Officer - -	November 6.
Froggatt; John - -	Post Office - -	Provincial Clerk - -	August 26.
‡Frost; Michael - -	Customs - -	Out-door Officer - -	October 7.
Fryer; John - - -	Post Office - -	Provincial Clerk - -	March 29.

Name.	Department and Situation.		Date of Certificate.
	Department.	Situation.	
G.			1878.
‡Ganderton; Edwin -	Inland Revenue -	Assistant of Excise -	September 7.
xii. Gane; William Henry -	- - - -	Clerk, Lower Division -	November 4.
‡Gann; Edmond Thomas -	- - - -	Do. - - -	December 5.
Gascoigne; Richard -	Post Office - -	Provincial Clerk - -	October 28.
Gasson; James - -	Do. - -	Do. - - -	November 27
‡Gattie; Walter Montague	Inland Revenue -	Assistant Surveyor of Taxes.	August 15.
‡Gaughan; William -	Customs - -	Out-door Officer - -	October 10.
vii. Geary; Willlam Charles	Board of Trade -	Nautical Surveyor -	February 1.
‡Genochio; Henry - -	- - - -	Boy Clerk, Lower Division	July 30.
†George; Florence - -	Post Office - -	Female Clerk, Savings Bank Department.	December 23.
vii. Gibbons; Charles -	Board of Trade -	Nautical Surveyor -	February 1.
†Gibbs; Harriett Ann -	Post Office - -	Female Returner - -	September 9.
vii. Gibson; Robert Taylor	Board of Trade -	Surveyor of Steam Ships -	February 1.
‡Gilbert; Thomas Hart -	Inland Revenue -	Assistant of Excise -	September30.
‡Gilchrist; George - -	- - - -	Clerk, Lower Division -	November 26.
Gillard; Francis Edward -	Post Office - -	Provincial Clerk - -	November 15.
Gillinder; George - -	Do. - -	Do. - - -	March 6.
vii. Gimblett; Henry -	Board of Trade -	Nautical Surveyor -	February 1.
Girling; William - -	Post Office - -	Provincial Clerk - -	August 19.
Glanfield; John - -	Do. - -	Do. - - -	October 10.
vii. Glasgow; David Alfred	Board of Trade -	Shipwright Surveyor -	February 1.
‡Glasson; William Henry -	- - - -	Clerk, Lower Division -	November 30.
xii. Glegg; John Baskervylle.	- - - -	Do. - - -	September20.
‡Glossop; Frank George -	- - - -	Do. - - -	November 20.
vii. Godfrey; George -	Board of Trade -	Shipwright Surveyor -	February 1.
xii. Godfrey; John - -	- - - -	Clerk, Lower Division -	March 5.
Goggins; John - -	Post Office - -	Provincial Clerk - -	July 29.
†Goldberg; William Farn -	Colonial Office -	Hong Kong Cadet - -	November 6.
‡Goodall; James Thomas -	Customs - -	Out-door Officer - -	July 16.
xii. Goodwin; William Edward.	- - - -	Clerk, Lower Division -	September20.
Gordon; Robert - -	Post Office - -	Provincial Clerk - -	November 4.
Gorman; Robert Archibald	Do. - -	Do. - - -	July 29.
vii. Gough; Frederick William	Board of Trade -	Nautical Surveyor -	February 1.
Gould; John - - -	Post Office - -	Provincial Clerk - -	December 23.
Gover; John Shaw - -	Do. - -	Do. - - -	October 28.
xii. Gowrie; Daniel - -	- - - -	Clerk, Lower Division -	November 7.
‡Graham; George Herbert	- - - -	Do. - - -	November 23.
‡Graham; John Anderson -	- - - -	Do. - - -	November 26.
xii. Graham; William Martin.	- - - -	Do. - - -	November 6.
‡Grant; George Frederick -	Customs - -	Out-door Officer - -	July 9.
vii. Grant; James - -	Board of Trade -	Engineer Surveyor -	February 1.
Graut; James - -	Post Office - -	Provincial Clerk - -	October 17.
vii. Grasett; William Julius Reynold.	War Office - -	Clerk in the District Paymaster's Office (London).	July 16.
Graves; John Hicks -	Consular Service -	Consul (Navigators Islands).	November 14.
†Gray; Annie - -	Post Office - -	Female Clerk, Account Branch (Edinburgh).	April 11.
‡Gray; John - - -	Patent Office - -	Index and Abridging Clerk	July 23.
vii. Gray; John McFarlane	Board of Trade -	Engineer Surveyor -	February 1.
xii. Gray; Nathaniel -	- - - -	Clerk, Lower Division -	September20.
Greaves; Thomas - -	Post Office - -	Provincial Clerk - -	August 22.
‡Green; Cornelius - -	Inland Revenue -	Assistant of Excise -	February 19.
‡Green; Henry John -	- - - -	Clerk, Lower Division -	November 27.
Green; William - -	Post Office - -	Provincial Clerk - -	July 5.
vii. Greene; Walter James	India Office - -	Second Class Clerk -	August 28.
‡Gregg; Michael - -	- - - -	Clerk, Lower Division -	August 7.
‡Gregg; Michael - -	Inland Revenue -	Assistant of Excise -	October 26.
‡Greig; Frank Jones -	- - - -	Clerk, Lower Division -	July 30.
‡Griffin; James - -	Inland Revenue -	Assistant of Excise -	September11.
†Grosvenor; George William Gent.	Convict Service -	Clerk in a Prison - -	June 14.
‡Grout; Edward William -	- - - -	Clerk, Lower Division -	August 1.
‡Groves; Michael - -	Inland Revenue -	Assistant of Excise -	September17.
vii. Gruggen; William John	Board of Trade -	Medical Inspector on Survey Staff.	April 16.
Guerin; John - -	Post Office - -	Provincial Clerk - -	November 15.
Gunn; Donald - -	Do. - -	Do. - - -	August 2.
Gunner; Samuel - -	Metropolitan Police Courts.	Assistant Clerk - -	July 11.

Name.	Department and Situation.		Date of Certificate.
	Department.	Situation.	
H.			
Haig; Andrew Gibb -	Office of Accountant in Bankruptcy (Scotland).	Clerk - - -	1878. April 23.
xii. Hair; William John Charles.	- - - -	Clerk, Lower Division -	September 20.
Hall; John - - -	Education Office -	Inspectors' Assistant -	April 4.
vii. Hall; Montagu Stanley	India Office - -	Second Class Clerk -	October 22.
Hall; William - -	Post Office - -	Provincial Clerk - -	October 21.
Hall; Worthy - -	Do. - -	Do. - - -	September 7.
Hallett; Frank George -	Do. - -	Do. - - -	November 15.
Halstead; William Charles	Do. - -	Do. - - -	September 7.
‡Hamblin; William Robert	Inland Revenue -	Assistant of Excise -	September 6.
vii. Hamerton; Gilbert Holden Orme.	Board of Trade -	Engineer Surveyor -	February 1.
‡Hamilton; Alexander -	Customs - -	Out-door Officer - -	June 27.
vii. Hamilton; Edward Thomas.	Board of Trade -	Clerk to the Principal Survey for Tonnage.	April 30.
vii. Hamilton; Patrick -	Scotch Education Department.	Clerk, Second Grade -	August 28.
Hamlin; William Henry -	Post Office - -	Provincial Clerk - -	December 24.
Hampson; Thomas - -	Do. - -	Do. - - -	February 25.
Hampton; Edward Inkerman.	Do. - -	Do. - - -	May 20.
‡Hanbury; Arthur Samuel	- - - -	Boy Clerk, Lower Division	February 28.
vii. Hannah; Walter -	Board of Trade -	Engineer Surveyor -	February 1.
Hannan; James - -	Inland Revenue -	Assistant of Excise -	February 26.
xii. Harding; Frank Charles	- - - -	Clerk, Lower Division -	November 7.
‡Harding; Samuel - -	Inland Revenue -	Assistant of Excise -	September 18.
‡Harman; Charles - -	India Audit Office -	Clerk, Lower Division -	August 19.
‡Harridance; Henry -	India Office - -	Book-keeper, Accounts' Branch.	March 8.
vii. Harris; Frederick -	Board of Trade -	Clerk on Consultative Establishment.	April 30.
xii. Harris; Henry Herbert	- - - -	Clerk, Lower Division -	March 5.
‡Harris; Herbert Andrews	Inland Revenue -	Assistant of Excise -	September 28.
‡Harris; William Thomas Hooper.	- - - -	Clerk, Lower Division -	August 6.
xii. Harrison; Richard Stewart.	- - - -	Do. - - -	March 5.
vii. Hart; James - -	Admiralty - -	Dispenser - - -	November 1.
Hart; Thomas Frederick -	Post Office - -	Provincial Clerk; - -	February 21.
‡Harvey; William - -	- - - -	Clerk, Lower Division -	July 26.
‡Hatfield; Henry - -	Patent Office - -	Index and Abridging Clerk	July 24.
‡Haugh; Michael - -	Inland Revenue -	Assistant of Excise -	September 24.
‡Haussor; Pierre Frederick	Consular Service -	Student Interpreter (China).	March 26.
‡Hawker; Henry Edwin -	Inland Revenue -	Assistant of Excise -	September 12.
‡Hawkins; Percy Ingleby -	- - - -	Clerk, Lower Division -	August 13.
xii. Hawkins; Robert -	- - - -	Do. - - -	November 7.
‡Hawkins; Robert Thomas	Inland Revenue -	Assistant of Excise -	October 17.
‡Hawthorne; Hugh - -	Do. - -	Do. - - -	September 11.
‡Hay; Nathaniel Alexander	- - - -	Clerk, Lower Division -	December 4.
Hayes; Henry Cecil -	Post Office - -	Provincial Clerk - -	May 1.
‡Hayes; James John -	Customs - -	Out-door Officer - -	October 10.
xii. Hayes; Samuel - -	- - - -	Clerk, Lower Division -	September 20.
‡Hayes; Thomas - -	Customs - -	Out-door Officer - -	January 8.
‡Hayes; Thomas - -	Inland Revenue -	Assistant of Excise -	October 3.
Hayward; Hannah - -	Post Office - -	Provincial Clerk - -	October 28.
Heath; Thomas - -	Do. - -	Postmaster (Totnes) -	April 23.
‡Heath; Walter - -	Patent Office - -	Clerk, Upper Division -	June 12.
Hebron; Percy - -	Post Office - -	Provincial Clerk - -	July 29.
†Hellier; Henry John -	Convict Service -	Clerk in a Prison - -	June 25.
Helsby; John - -	Post Office - -	Provincial Clerk - -	July 22.
Henderson; John - -	Temporary Commissions.	Clerk, Endowed Institutions (Scotland) Commission.	November 25.
‡Hendry; Thomas Stewart	Inland Revenue -	Assistant of Excise -	September 9.
‡Henley; Lionel William -	Consular Service -	Student Interpreter (China).	April 3.
vii. Henri; Henry Alphonso	Board of Trade -	Engineer Surveyor -	February 1.
‡Henry; James Maurice -	- - - -	Clerk, Lower Division -	November 30.
Hepburn; James - -	Post Office - -	Postmaster (Luton) -	July 11.
‡Hepenstall; Robert -	Inland Revenue -	Assistant of Excise -	September 20.
‡Herbert; Sidney - -	- - - -	Clerk, Lower Division -	November 21.
‡Heron; James Andrew -	Customs - -	Out-door Officer - -	September 28.
‡Herring; Willie Harry -	Do. - -	Do. - - -	July 9.
vii. Herriot George - -	Board of Trade -	Surveyor of Steam Ships -	February 1.
Hetherington; James -	Post Office - -	Provincial Clerk - -	October 21.
vii. Hetherington; Robert	Board of Trade -	Engineer Surveyor -	February 1.

Name.	Department and Situation.		Date of Certificate.
	Department.	Situation.	
			1878.
‡Hickman; John Blair Smith	- - - -	Clerk, Lower Division -	November 27.
‡Hicks; Henry Edwin -	- - - -	Do. - - -	August 1.
‡Higgings, Daniel - -	Customs - -	Out-door Officer - -	November 1.
Hight; John Bird - -	Post Office - -	Provincial Clerk - -	November 4.
vii. Hill; John Harding -	Board of Trade -	Shipwright Surveyor -	February 1.
xii. Hillyard; Francis -	- - - -	Clerk, Lower Division -	November 7.
‡Hilton Thomas Harry -	Inland Revenue -	Assistant of Excise -	September 21.
xii. Hinchley; James -	- - - -	Clerk, Lower Division -	November 7.
xii. Hinde; Arthur - -	- - - -	Do. - - -	September 20.
Hipper; Frederick Edmund	Post Office - -	Provincial Clerk - -	January 24.
vii. Hoar; Henry - -	Board of Trade -	Engineer Surveyor -	February 1.
‡Hobbs; Arthur Owen -	- - - -	Clerk, Lower Division -	July 27.
‡Hodges; Francis William -	Patent Office - -	Clerk, Upper Division -	July 27.
vii. Hodgson; John -	Post Office - -	Postmaster (West Hartlepool).	February 23.
‡Hodgson; Joseph - -	India Audit Office -	Clerk, Lower Division -	August 19.
vii. Holcombe; Charles Alexander.	Board of Trade -	Medical Inspector on Survey Staff.	April 16.
Holden; Sidney - -	Post Office - -	Provincial Clerk - -	August 26.
Holder; William John -	Do. - -	Do. - - -	January 25.
‡Hollway; Henry Calthrop	Record Office (England).	Clerk - - -	June 5.
vii. Holman; David Henry	Board of Trade -	Engineer Surveyor -	February 1.
‡Holmes; John Robert -	Inland Revenue -	Assistant of Excise -	September 23.
Hood; William Henry -	Post Office - -	Provincial Clerk -	August 16.
Hoole; Richard - -	Do. - -	Do. - - -	December 12.
‡Hooper; George Frederick	- - - -	Clerk, Lower Division -	December 2.
Hooper; Henry William -	Post Office - -	Provincial Clerk - -	August 1.
vii. Hornidge; Eustace Farre.	India Office - -	Second Class Clerk -	August 28.
Hornsby; Alfred - -	Post Office - -	Provincial Clerk - -	October 30.
‡Horspool; William Paddison.	India Audit Office -	Clerk, Lower Division -	August 19.
‡Horton; Walter Prescott -	Customs - -	Out-door Officer - -	June 27.
vii. Hoskins; Henry -	India Office - -	Second Class Clerk -	October 8.
‡Houghton; William -	- - - -	Clerk, Lower Division -	August 1.
‡Houston; Thomas Frazer -	Inland Revenue -	Assistant of Excise -	September 19.
Howard; Alexander McKenzie.	Post Office - -	Provincial Clerk - -	December 24.
‡Howe; Jabez Edward -	- - - -	Clerk, Lower Division -	July 27.
xii. Howells; David -	- - - -	Do. - - -	March 5.
‡Howlett; Charles Edgar -	Office of Woods -	Junior Clerk - -	January 26.
vii. Hua; Gabriel - -	Admiralty - -	French Master, H.M.S. "Britannia."	January 2.
Huck; Gerard - -	Post Office - -	Provincial Clerk - -	May 11.
Huggins; William Butler -	Do. - -	Do. - - -	June 8.
‡Hulme; Frederick William Goodlad,	- - - -	Boy Clerk, Lower Division	August 1.
‡Hunt; Frederick William	- - - -	Clerk, Lower Division -	August 2.
‡Hunt; Hedley Freeman -	Inland Revenue -	Assistant of Excise -	September 11.
Hunt; Thomas - -	Post Office - -	Provincial Clerk - -	November 11.
‡Hunter; Andrew John -	Inland Revenue -	Assistant of Excise -	October 15.
vii. Hunter; George Rigg -	Post Office - -	Second Class Clerk, Surveyor-General's Office, Edinburgh.	October 24.
Hunter; John Harrison -	Do. - -	Provincial Clerk - -	August 26.
‡Hutchings; Francis Smith	- - - -	Clerk, Lower Division -	November 20.
†Hutchinson; Anna Hawker	Post Office - -	Female Clerk, Savings Bank Department.	December 23.
xii. Hutton; Thomas -	- - - -	Clerk, Lower Division -	March 5.
xii. Hyde; William - -	- - - -	Do. - - -	November 7.
I.			
xii. Ilsley; John - -	- - - -	Clerk, Lower Division -	September 20.
‡Innes; William - -	- - - -	Do. - - -	August 6.
Irvine; William - -	Post Office - -	Provincial Clerk - -	November 12.
‡Irwin; Thomas Joseph -	- - - -	Clerk, Lower Division -	December 5.
vii. Isaacson; Stephen Henry Holden.	India Office - -	Second Class Clerk -	September 9.
J.			
Jackson; Joseph - -	Post Office - -	Provincial Clerk - -	October 30.
Jackson; William - -	Do. - -	Do. - - -	November 11.
Jacob; Alice Emily - -	Do. - -	Do. - - -	October 1.
vii. Jago; Frederick -	Board of Trade -	Shipwright Surveyor -	February 1.
James; Elizabeth Jane -	Post Office - -	Postmistress (Chepstow) -	October 16.

Name.	Department and Situation.		Date of Certificate.
	Department.	Situation.	
			1878.
xii. James; Henry - -	- - - -	Clerk, Lower Division -	November 7.
vii. James; John Broad -	Board of Trade -	Engineer Surveyor -	February 1.
‡Jamieson; William -	Inland Revenue -	Third Class Clerk, Solicitors' Office (Edinburgh).	September 9.
Jarrett; Thomas William -	Post Office - -	Provincial Clerk - -	February 5.
vii. Jarvis; Charles Robert Owen.	Board of Trade -	Shipwright Surveyor -	February 1.
xii. Jay; Macdonald Henry	- - - -	Clerk, Lower Division -	September 20.
‡Jeffery; George - -	Inland Revenue -	Assistant of Excise -	October 15.
Jeffs; James - - -	Post Office - -	Provincial Clerk - -	September 16.
Jenkins; Henry Joseph -	Do. - -	Do. - - -	October 10.
xii. Jenkins; Richard -	- - - -	Clerk, Lower Division -	September 20.
‡Jermyn; John - -	Inland Revenue -	Assistant of Excise -	October 3.
xii. Johnson; Henry -	- - - -	Clerk, Lower Division -	November 7.
Johnson; John - -	Post Office - -	Provincial Clerk - -	November 25.
Johnson; Joseph - -	Do. - -	Do. - - -	November 22.
Johnsone, William - -	Do. - -	Do. - - -	November 21.
Johnstone; James Stewart	Do. - -	Do. - - -	September 12.
‡Jonas; Edward Ernest Waldron.	- - - -	Clerk, Lower Division -	July 26.
Jones; Alfred William -	Post Office - -	Provincial Clerk - -	November 21.
Jones; David Edward -	Do. - -	Do. - - -	October 17.
‡Jones; Edward - -	Inland Revenue -	Assistant of Excise -	February 27.
‡Jones; Edward Owen -	- - - -	Clerk, Lower Division -	December 2.
xii. Jones; Frederick -	- - - -	Do. - - -	September 20.
Jones; George Bevan -	Post Office - -	Provincial Clerk - -	October 31.
vii. Jones; Henry Stevens -	Admiralty - -	Dispenser - - -	November 26.
Jones; Milburne Alfred Edmund.	Post Office - -	Provincial Clerk - -	August 27.
vii. Jones; Robert Edward Follett.	Registry of Petty Sessions Clerks (Ireland).	Junior Clerk - -	March 16.
xii. Jones; William - -	- - - -	Clerk, Lower Division -	September 20.
Jones; William Southern Malcolm.	Consular Service -	Clerk, Supreme Court, Shanghai.	January 2.
Joy; Frederick Seth -	Post Office - -	Provincial Clerk - -	August 9.
‡Joyce; Thomas Guinness C. O'Flaherty.	Customs - -	Out-door Officer - -	February 27.
vii. Jubb; Walter - -	Board of Trade -	Shipwright Surveyor -	February 1.
Julsing; Alice Christina -	Post Office - -	Provincial Clerk - -	February 20.
‡Just; Hartmann Wolfgang.	Colonial Office -	Clerk - - -	June 3.
K.			
Kay; Jonathan - -	Post Office - -	Provincial Clerk - -	June 12.
‡Kearney; Elfric Leofwin	Civil Service Commission.	Clerk - - -	March 22.
‡Keir; James - -	Customs - -	Out-door Officer - -	October 2.
‡Kelley; William - -	- - - -	Clerk, Lower Division -	August 1.
‡Kelly; Daniel - -	Customs - -	Out-door Officer - -	January 28.
Kelly; James - -	Post Office - -	Provincial Clerk - -	November 6.
‡Kelly; John - -	Customs - -	Out-door Officer - -	May 2.
‡Kelly; Martin - -	- - - -	Clerk, Lower Division -	August 7.
Kelly; William - -	Post Office - -	Provincial Clerk - -	October 30.
Kemp; William - -	Do. - -	Do. - - -	October 7.
vii. Kennedy; Charles Willmore,	Inland Revenue -	Assistant Surveyor of Taxes.	June 8.
xii. Kennedy; Edmund -	- - - -	Clerk, Lower Division -	March 5.
‡Kennedy; Edward Robert	- - - -	Boy Clerk, Lower Division	August 1.
xii. Kennedy; George -	- - - -	Clerk, Lower Division -	November 7.
‡Kennedy; Thomas Edward.	- - - -	Do. - - -	July 30.
vii. Kent; Walter - -	Board of Trade -	Clerk on Consultative Establishment.	April 30.
‡Keogh; William Edward -	- - - -	Clerk, Lower Division -	November 29.
‡Kettle; John Thomas -	Inland Revenue -	Assistant of Excise -	February 21.
vii. Key; Gilbert Trowerd -	Board of Trade -	Nautical Surveyor -	February 1.
vii. King; Merton - -	India Office - -	Second Class Clerk -	August 28.
‡King; Thomas John -	Inland Revenue -	Assistant of Excise -	September 21.
Kinnear; John - -	Post Office - -	Provincial Clerk - -	August 12.
Kinnoch; Peter Robertson	Prison Service (Scotland).	Second Class Clerk, General Prison, Perth.	December 9.
Kirk; Alfred - -	Education Office -	Inspectors' Assistant -	August 26.
Kirk; Ernest - -	Post Office - -	Provincial Clerk - -	October 17.
Kirkham; Thomas Barker -	Do. - -	Do. - - -	August 9.
Kirkman; George - -	Do. - -	Do. - - -	August 27.
†Kirkpatrick; Sophia -	Do. - -	Female Clerk, Savings Bank Department.	December 23.

Name.	Department and Situation.		Date of Certificate.
	Department.	Situation.	
			1878.
xii. Kitchen; James -	- - - -	Clerk, Lower Division -	March 5.
Knight; Charles Harry Wilkinson.	Post Office - -	Provincial Clerk - -	August 30.
Knill; William - -	Do. - -	Do. - - -	October 21.
xii. Knott; Charles Corbet -	- - - -	Clerk, Lower Division -	October 16.
‡ Küchler; Louis William -	Consular Service -	Student Interpreter (Japan.	April 9.
L.			
Laidlaw; William Telford Phillips.	Post Office - -	Provincial Clerk - -	March 14.
‡ Lake; Richard Stuart -	- - - -	Clerk, Lower Division -	August 8.
† Laker; Edward George -	Convict Service -	Clerk in a Prison - -	June 15.
‡Lamb; Robert Laurence -	Inland Revenue -	Assistant of Excise -	September16.
Lane; John Denis - -	Customs - -	Out-door Officer - -	October 8.
Langley; Thomas Henry -	Post Office - -	Provincial Clerk - -	July 4.
†Langley; Walter Louis Frederick Galtz - -	Foreign Office -	Clerk - - -	June 7.
Langley; William - -	Post Office - -	Provincial Clerk - -	October 17.
Langridge; Sarah Louisa -	Do. - -	Do. - - -	March 16.
‡Langston; Frederick William.	- - - -	Clerk, Lower Division -	August 8.
Lanyon; Arthur Richard -	Post Office - -	Provincial Clerk - -	April 13.
Lapthorne; John - -	Do. - -	Do. - - -	January 2.
vii. Laslett; William Henry	Board of Trade -	Shipwright Surveyor -	February 1.
†Latham; Grace Henrietta	Post Office - -	Female Clerk, Savings Bank Department -	November 1.
vii. La Trobe; Frederick Scott.	Board of Trade -	Medical Inspector on Survey Staff.	April 16.
xii. Lawrence; Evan Charles Woodcock.	- - - -	Clerk, Lower Division -	February 20.
Leack; Alice Matilda -	Post Office - -	Provincial Clerk - -	July 12.
Leak; Thomas - -	Do. - -	Postmaster, (Uppingham)	June 3.
Leamy; Alfred Charles -	Do. - -	Provincial Clerk - -	November11.
vii. Leary; Alfred Sidney -	India Office - -	Second Class Clerk -	August 28.
‡Lechêne; Achille Henry -	- - - -	Boy Clerk, Lower Division	August 9.
vii. Lee; John - -	India Office - -	Second Class Clerk -	August 28.
‡Lee; Patrick Joseph John	- - - -	Clerk, Lower Division -	December 10.
xii. Leefe; Ewbank - -	- - - -	Do. - - -	November 4.
Leeson; William Bryan -	Post Office - -	Provincial Clerk - -	September28.
Legg; Robert - -	Do. - -	Do. - - -	May 11.
vii. Lehane; Jeremiah -	War Office - -	Steward and Compounder, Lock Hospital, Kildare.	March 26.
Le Messurier; Edmund -	Post Office - -	Provincial Clerk - -	December 5.
Lenox; Benjamin - -	Do. - -	Do. - - -	October 29.
Lenox; Robert - -	Do. - -	Do. - - -	October 29.
‡Le Sueur; Clement George	- - - -	Clerk, Lower Division -	November 23.
Lewin; Frederick - -	Post Office - -	Provincial Clerk - -	July 12.
vii. Lewis; Edward - -	Board of Trade -	Engineer Surveyor -	February 1.
Lewis; John - - -	Post Office - -	Provincial Clerk - -	September17.
vii. Lewis; Richard - -	General Prison Service (Ireland). -	Clerk - - -	December 13.
‡Lewis; Thomas - -	Admiralty - -	Assistant Schoolmaster in one of Her Majesty's Dockyards.	May 2.
‡Liggins; Herbert Joseph -	- - - -	Clerk, Lower Division -	November26.
‡Linchey; Henry - -	Inland Revenue -	Assistant of Excise -	September14.
‡Lindsay; James Brown -	- - - -	Clerk, Lower Division -	November 27.
‡Lindsay; John - -	Customs - -	Out-door Officer - -	January 4.
vii. Lines; Richard - -	Convict Service -	Schoolmaster - -	February 11.
‡Lines; William Edward -	- - - -	Clerk, Lower Division -	November 20.
‡Litten; Albert Augustus -	- - - -	Do. - - -	November 28.
‡Lloyd; William John -	Inland Revenue -	Assistant of Excise -	February 22.
†Lockhart; James Haldane Stewart.	Colonial Office -	Hong Kong Cadet - -	November 6.
Loftus; Augustus Pelham Brooke.	Foreign Office -	Queen's Foreign Service Messenger.	June 7.
Lomas; George - -	Post Office - -	Provincial Clerk - -	October 18.
vii. Long; John James -	Prison Service -	Schoolmaster - -	August 23.
Lothian; William Deighton	Post Office - -	Provincial Clerk - -	February 22.
xii. Lough; Joseph Fleming	- - - -	Clerk, Lower Division -	November 7.
vii. Loxdale; George Henry	Board of Trade -	Engineer Surveyor -	February 1.
‡Lucey; Denis - -	Customs - -	Out-door Officer - -	October 8.
Lugg; Alexander - -	Post Office - -	Provincial Clerk - -	October 30.
Lyons; Michael - -	Do. - -	Do. - - -	June 14.
‡Lyons; Patrick - -	Customs -	Out-door Officer - -	August 30.
vii. Lyster; Thomas William	Science and Art Department - -	Assistant Librarian, National Library, Dublin.	November15.
vii. Lyster; William George	Post Office - -	Postmaster (Reading) -	April 24.

Name.	Department and Situation.		Date of Certificate.
	Department.	Situation.	
M.			1878.
Maberly; Joseph Strutt -	Post Office - -	Provincial Clerk - -	October 31.
‡McAravey; John - -	Customs - -	Out-door Officer - -	February 4.
Macbeth; James Douglas -	Post Office - -	Provincial Clerk - -	March 1.
†McBlain; Annie Sophia -	Do. - - -	Female Clerk, Savings Bank Department.	December 23.
xii. Maccabee; William Henry.	- - - -	Clerk, Lower Division -	February 8.
McCall; George Herbert -	Post Office - -	Provincial Clerk - -	September 24.
‡McCaw; William - -	Inland Revenue -	Assistant of Excise -	February 19.
‡McCawley; Patrick -	Customs - -	Out-door Officer - -	October 30.
‡McCleery; John - -	Do. - - -	Do. - - -	July 1.
xii. McClenaghan; Robert -	- - - -	Clerk, Lower Division -	November 4.
‡McCormack; John -	Inland Revenue -	Assistant of Excise -	March 4.
‡McCormick; James Frazer	- - - -	Clerk, Lower Division -	December 3.
‡McCrum; James - - -	Customs - -	Out-door Officer - -	March 19.
‡McCrum; James - -	Inland Revenue -	Assistant of Excise -	September 13.
‡McCullagh; James Stanley	Do. - -	Assistant of Excise -	October 3.
xii. McDonald; Edward Bannerman.	- - - -	Clerk, Lower Division -	September 20.
McDonald; John - -	Post Office - -	Provincial Clerk - -	October 17.
‡McDonald; John - -	Inland Revenue -	Assistant of Excise -	September 5.
MacDonald; Walter James	Post Office - -	Provincial Clerk - -	October 21.
xii. McEldoon; John -	- - - -	Clerk, Lower Division -	November 7.
‡McGinley; Peter Toner -	Inland Revenue -	Assistant of Excise -	September 23.
‡McGowan; William -	Customs - -	Out-door Officer - -	October 2.
McGregor; Gregor Guthrie	Post Office - -	Provincial Clerk - -	January 16.
McGregor; Robert - -	Do. - -	Do. - - -	August 12.
‡McInerney; Patrick Joseph.	Inland Revenue -	Assistant of Excise -	September 24.
McIntyre; Donald - -	Post Office - -	Provincial Clerk - -	March 1.
McIntyre; Duncan - -	Do. - -	Do. - - -	August 12.
Macintyre; John - -	Do. - -	Do. - - -	August 12.
McIntyre; William Watson	Do. - -	Do. - - -	July 27.
Mackay; Adam - -	Temporary Commissions.	Assistant to Secretary, Registry of Deeds Commission (Ireland).	May 16.
Mackay; James - -	Registry of Petty Sessions Clerks (Ireland).	Clerk - - -	November 28.
‡Mackay; Joseph - -	Customs - -	Out-door Officer - -	October 19.
‡McKenna; Daniel - -	Inland Revenue -	Assistant of Excise -	September 27.
‡McKeon; James Felix -	Do. - -	Do. - - -	February 25.
McKibbin; Robert - -	Post Office - -	Provincial Clerk - -	December 24.
McKirgan; Robert - -	Do. - -	Do. - - -	October 17.
McLean; Donald - -	Do. - -	Postmaster (Oban) -	April 25.
†Maclean; James - -	Colonial Office -	Ceylon Writer - -	November 6.
Maclean; John - -	Post Office - -	Provincial Clerk - -	November 12.
Maclean; Peter - -	Do. - -	Do. - - -	November 11.
‡MacMahon; Thomas Noonan.	Customs - -	Out-door Officer - -	April 12.
‡McManus; Michael John -	Inland Revenue -	Assistant of Excise -	February 25.
‡Macnamara; Daniel Eugene	Customs - -	Out-door Officer - -	April 12.
‡Macnamara; James Francis	- - - -	Clerk, Lower Division -	November 26.
Macnamara; James Philip -	Post Office - -	Provincial Clerk - -	June 25.
McNamee; John - -	Do. - -	Do. - - -	November 27.
vii. McNeil; James - -	Board of Trade -	Shipwright Surveyor -	February 1.
McPherson; Charles -	Post Office - -	Provincial Clerk - -	November 8.
Macpherson; Peter - -	Do. - -	Do. - - -	March 11.
‡Madell; Thomas John -	Inland Revenue -	Assistant of Excise -	March 15.
‡Madigan; Michael Prendergast.	Customs - -	Out-door Officer - -	July 27.
vii. Magowan; James -	Board of Trade -	Shipwright Surveyor -	February 1.
‡Maguire; James - -	Customs - -	Out-door Officer - -	August 3.
Maidment; Thomas George	High Court of Justice	Clerk, Principal Registry, Probate, Divorce, and Admiralty Division.	January 21.
‡Major; Albany Featherstonehaugh.	- - - -	Clerk, Lower Division -	August 9.
Mallinder; Isaac Holmes -	Post Office - -	Provincial Clerk - -	July 24.
‡Mann; Alfred Douglas -	- - - -	Clerk, Lower Division -	November 20.
vii. Mansfield; William Lomer.	Board of Trade -	Shipwright Surveyor -	February 1.
March; Jesse - -	Post Office - -	Provincial Clerk - -	December 3.
Marcham; John - -	Do. - -	Do. - - -	August 9.
Marlow; William Patrick John Francis.	Supreme Court of Judicature (Ireland).	Third Class Clerk, Master's Office, Queen's Bench Division.	April 25.
xii. Marriott; Sidney Randolph Robert Allies.	- - - -	Clerk, Lower Division -	November 7.

Name.	Department and Situation.		Date of Certificate.
	Department.	Situation.	
			1878.
Marshall; John William -	Post Office - -	Provincial Clerk - -	February 8.
‡Marshall; Joseph Andrew Percy.	Inland Revenue -	Assistant of Excise -	February 22.
Marshall; Joseph Henry -	Post Office - -	Provincial Clerk - -	August 12.
‡Marshall; William Charles	Customs - -	Out-door Officer - -	March 19.
‡Marshall: William Charles	Inland Revenue -	Assistant of Excise -	September 9.
vii. Martin; Charles -	Post Office - -	Postmaster (Staines) -	May 22.
Martin; George Caleb -	Do. - -	Provincial Clerk - -	December 24.
xii. Martin; James Charles	- - - -	Clerk, Lower Division -	September 20.
‡Martin; William - -	Patent Office -	Index and Abridging Clerk	July 26.
vii. Martyn; Orlando Bridgman.	Admiralty - -	Instructor in Mathematics, Royal Naval College, Greenwich.	November 7.
‡Mason; Edwin - -	Inland Revenue -	Assistant of Excise -	September 17.
‡Mathews; William George	Do. - -	Do. - - -	September 18.
‡Matthews; Harry Waters Minette.	- - - -	Clerk, Lower Division -	December 7.
Matthews; James - -	Post Office - -	Provincial Clerk - -	May 15.
vii. Mavor; James - -	Board of Trade -	Nautical Surveyor -	February 1.
Maxwell; Michael - -	Post Office - -	Provincial Clerk - -	August 12.
Meadows; Thomas - -	Do. - -	Do. - - -	August 9.
‡Meddins; William David -	Customs - -	Out-door Officer - -	September 27.
‡Mellor; Henry - -	Do. - -	Do. - - -	July 18.
‡Menary; Alexander -	Do. - -	Do. - - -	March 21.
Menzies; James - -	Post Office - -	Provincial Clerk - -	October 30.
Merrill; Charles - -	Do. - -	Do. - - -	October 10.
‡Metherell; William Philip	Inland Revenue -	Assistant of Excise -	September 9.
‡Mew; William Henry -	Do. - -	Do. - - -	September 11.
‡Mew; William Henry -	- - - -	Clerk, Lower Division -	November 30.
‡Miles; George John -	- - - -	Do - - -	November 23.
Millar; Peter - -	Post Office - -	Provincial Clerk - -	August 12.
‡Millen; John - -	Customs - -	Out-door Officer - -	July 13.
‡Miller; Ernest William -	Post Office - -	Clerk, Lower Division -	December 2.
‡Miller; John William -	Inland Revenue -	Assistant of Excise -	September 6.
‡Miller; Peter - -	- - - -	Clerk, Lower Division -	August 19.
Mills; John - - -	Post Office - -	Provincial Clerk - -	October 28.
xii. Mills; Joseph Charles -	- - - -	Clerk, Lower Division -	September 20.
Mills; Louisa - -	Post Office - -	Provincial Clerk - -	October 28.
vii. Mills; William Henry -	Board of Trade -	Shipwright Surveyor -	February 1.
vii. Milne; John - -	Scotch Education Department.	Clerk (Extra) of the First Class.	August 28.
vii. Milner; John Crompton	India Office - -	Second Class Clerk -	August 28.
Milnes, Alfred - -	London University -	Assistant Clerk to the Senate.	May 11.
xii. Minards; John Menear	- - - -	Clerk, Lower Division -	November 7.
‡Mitchell; Thomas John -	- - - -	Boy Clerk, Lower Division	July 31.
‡Molony: Stephen Joseph -	- - - -	Clerk, Lower Division -	December 9.
Molseed; Andrew - -	Post Office - -	Provincial Clerk - -	October 15.
Moncur; William - -	Do. - -	Do. - - -	September 16.
‡Mooney; Alexander Patrick.	- - - -	Clerk, Lower Division -	December 9.
‡Moore Edward Montgomery.	Inland Revenue -	Assistant of Excise -	March 29.
Moore; Herbert Octavius -	Post Office - -	Provincial Clerk - -	December 31.
Moore; John Francis -	Do. - -	Do. - - -	August 9.
‡Moore; John Thomas -	- - - -	Clerk, Lower Division -	December 3.
Moore; Rebecca - -	Post Office - -	Provincial Clerk - -	October 7.
vii. Moore; William Henry	Board of Trade -	Principal Surveyor for Tonnage.	February 1.
‡More; William Henry -	Office of Woods -	Supplementary Clerk -	January 23.
‡More; William Henry -	Do. - -	Clerk - - - -	December 5.
†Moreton; Anna Margaret Mackenzie.	Post Office - -	Female Clerk, Savings Bank Department.	December 23.
‡Morony; William Francis	Customs - -	Out-door Officer - -	April 26.
‡Morrin; Thomas - -	- - - -	Clerk, Lower Division -	November 23.
Morris; Arthur Henry -	Post Office - -	Provincial Clerk - -	October 7.
Morris; Edward - -	Education Office -	Inspector's Assistant -	August 15.
Morris; Thomas Seargeant	Post Office - -	Postmaster (Kenilworth)	January 16.
Morrison; Francis - -	Do. - -	Provincial Clerk - -	August 12.
Morrison; William - -	Do. - -	Do. - - -	August 12.
xii. Mottley; Arthur -	- - - -	Clerk, Lower Division -	September 20.
Moyer; Frederick William -	Post Office - -	Provincial Clerk - -	November 11.
Muir; John - - -	Do. - -	Postmaster (Edgeworthstown).	January 22.
Mulcahy; Patrick - -	Do. - -	Provincial Clerk - -	October 18.
Munden; Henry George -	Do. - -	Do - - -	August 22.
vii. Munro; Alexander -	Board of Trade -	Shipwright Surveyor -	February 1.
‡Munro; John May Herbert	Patent Office - -	Index and Abridging Clerk	July 25.
vii. Munro; Wellesley Herbert.	India Office - -	Second Class Clerk -	August 28.
Murdoch; Hugh - -	Customs - -	Out-door Officer - -	January 2.
Murdoch; John - -	Post Office - -	Provincial Clerk - -	November 16.

Name.	Department and Situation.		Date of Certificate.
	Department.	Situation.	
			1878.
‡Murphy; Albert John	Inland Revenue	Assistant of Excise	October 9.
Murphy; Daniel	Post Office	Provincial Clerk	September 25.
‡Murphy; Michael James	Customs	Out-door Officer	October 22.
‡Murphy; Thomas	Inland Revenue	Assistant of Excise	September 17.
†Murray; Ellen Elizabeth	Post Office	Female Clerk, Savings Bank Department.	March 13.
‡Murray; Patrick John	Inland Revenue	Assistant of Excise	September 19.
‡Murray; Peter	Customs	Out-door Officer	April 24.
‡Murray; Thomas	Inland Revenue	Assistant of Excise	September 16.
Myerscough; William	Post Office	Provincial Clerk	July 11.
N.			
‡Naish; Edward Joseph	- - -	Clerk, Lower Division	August 1.
‡Nash; Robert Ernest	- - -	Do.	August 13.
Naylor; John	Post Office	Provincial Clerk	October 30.
‡Neatham; Albert Henry John.	- - -	Boy Clerk, Lower Division	August 1.
‡Neatham; Edward William Mowbray.	- - -	Clerk, Lower Division	November 23.
‡Neazor; James	Inland Revenue	Assistant of Excise	September 20.
Neeves; John Henry	Post Office	Provincial Clerk	February 14.
Neil; Thomas Hiram	Do.	Do.	August 22.
‡Nelson; Neil	Customs	Out-door Officer	January 26.
Nesbitt; William	Post Office	Provincial Clerk	October 17.
‡New: Joseph Henry	- - -	Clerk, Lower Division	November 21.
Newbould; William	Post Office	Provincial Clerk	October 17.
vii. Newman; Albert John Bray.	Board of Trade	Engineer Surveyor	February 1.
Newman; Samuel John	Post Office	Provincial Clerk	July 23.
‡Newmarch; Henry	Inland Revenue	Assistant of Excise	September 7.
‡Newnam; Walter	- - -	Clerk, Lower Division	November 26.
xii. Newton; Thomas	- - -	Do.	March 5.
‡Nicholls; William Samuel	Customs	Out-door Officer	July 26.
Nickal; John	Education Office	Inspector's Assistant	April 11.
Nicol, John Robertson	Post Office	Provincial Clerk	April 6.
Nield; Garside	Do.	Do.	August 22.
xii. Nisbet; James Somerville.	- - -	Clerk, Lower Division	January 29.
‡Nobbs; Cyril Perkins	Inland Revenue	Assistant of Excise	September 5.
†Noël; Ida	Post Office	Female Clerk, Savings Bank Department	July 11.
‡Northwood; Arthur	- - -	Clerk, Lower Division	August 14.
‡Nulty; Andrew Michael	- - -	Do.	November 26.
‡Nunneley; Frederick William.	- - -	Do.	November 26.
vii. Nursey; John Fairfax	India Office	Second Class Clerk	September 9.
O.			
‡Oakeshott; George Alfred	Post Office	Clerk, Secretary's Office	March 8.
‡O'Brien; Thomas	Customs	Out-door Officer	April 9.
‡O'Callaghan; Daniel Francis.	Do.	Do.	April 24.
‡O'Coffey; Timothy	Inland Revenue	Assistant of Excise	March 18.
‡O'Connell; James Lawrence.	- - -	Clerk, Lower Division	November 21.
‡O'Connor; Patrick	Customs	Out-door Officer	October 14.
‡O'Conner; Patrick Patt	Do.	Do.	January 3.
‡O'Dea; Michael	- - -	Clerk, Lower Division	December 3.
‡O'Donoghue; Daniel	- - -	Do.	November 26.
vii. O'Flanagan; Patrick	Registrar General's Office (Ireland).	Third Class Clerk	January 22.
‡Ogle; Charles Robert	- - -	Clerk, Lower Division	August 1.
vii. O'Hara; James	Local Government Board, Ireland.	Auditor, Dublin	October 15.
‡Oldfield; Robert William	Inland Revenue	Assistant of Excise	September 26.
Oldfield; Stapleton Thomas Alexander.	Post Office	Provincial Clerk	November 2.
Oldland; James	Do.	Do.	October 25.
‡O'Leary; Jeremiah William	Inland Revenue	Assistant of Excise	September 30.
Olney; James Frost	Post Office	Provincial Clerk	December 24.
‡O'Mahony; Benjamin Francis.	- - -	Clerk, Lower Division	December 3.
xii. O'Mahony; Michael	- - -	Do.	March 5.
O'Neil; Henry	War Office	Temporary Civilian Clerk, Office of the Paymaster, Army Hospital Corps (London).	September 13.

Name.	Department and Situation.		Date of Certificate.
	Department.	Situation.	
			1878.
O'Neill; George - -	Post Office - -	Provincial Clerk - -	November 27.
‡O'Neill; James - -	Customs - -	Out-door Officer - -	May 1.
‡O'Reilly; John James -	Do. - -	Do. - - -	July 2.
‡O'Rourke; John Joseph -	Do. - -	Do. - - -	October 12.
‡Osborne; John Gresham -	Inland Revenue -	Assistant of Excise -	September 5.
‡O'Shea; Patrick - -	- - - -	Clerk, Lower Division -	January 31.
‡O'Shea: Patrick Joseph -	Customs - -	Out-door Officer - -	October 31.
‡O'Sullivan; Jeremiah -	Do. - -	Do. - - -	April 26.
‡O'Sullivan; Michael -	- - - -	Clerk, Lower Division -	August 20.
O'Sullivan; Patrick -	Post Office - -	Provincial Clerk - -	September 16.
‡Outhwaite; Henry -	- - - -	Clerk, Lower Division -	December 3.
‡Owen; John - -	Inland Revenue -	Assistant of Excise -	March 5.
Owens; Philip - -	Post Office - -	Provincial Clerk - -	March 22.
‡Oxford; Joseph - -	Inland Revenue -	Assistant of Excise -	September 5.
Oyston; John - -	Post Office - -	Provincial Clerk - -	January 25.
P.			
Packer; Henry - -	Post Office - -	Provincial Clerk - -	October 17.
‡Painter; Henry Francome	- - - -	Clerk, Lower Division -	November 25.
Pargeter; Edward Henry Newman.	Post Office - -	Provincial Clerk - -	October 1.
Parker; Richard - -	Do. - -	Do. - - -	February 16.
‡Parkes; Charles Ward -	Inland Revenue -	Assistant of Excise -	October 18.
‡Parkes; William John -	Customs - -	Out-door Officer - -	July 25.
Parkhouse; John - -	Post Office - -	Provincial Clerk - -	November 22.
†Parsons; Elizabeth -	Do. - -	Female Returner - -	January 15.
Paterson; John - -	Do. - -	Provincial Clerk - -	August 1.
Patrick; James - -	Do. - -	Do. - - -	December 18.
Patrick; Robert Cuthbert -	Do. - -	Do. - - -	October 18.
Patterson; Catherine Elizabeth.	Do. - -	Do. - - -	January 2.
‡Patterson; George Sandford.	Inland Revenue -	Assistant of Excise -	September 5.
Patterson; George William	Post Office - -	Provincial Clerk - -	March 8.
‡Paul; William - -	Inland Revenue -	Assistant of Excise -	September 10.
vii. Paxton; Peter - -	Board of Trade -	Shipwright Surveyor -	February 1.
vii. Paxton; Stephen James Joseph.	Do. - -	Do. - - -	February 1.
Peacey; Mark Hale - -	Post Office - -	Provincial Clerk - -	September 16.
vii. Pearch; Henry Robert James.	Board of Trade -	Nautical Surveyor -	February 1.
Pearson; Thomas William -	Copyhold Inclosure and Tithe Commission.	Assistant Surveyor -	September 27.
‡Pearson; William - -	- - - -	Clerk, Lower Division -	December 2.
Pearson; William James -	Post Office - -	Provincial Clerk - -	December 12.
‡Pelly; George Kirkaldy -	- - - -	Clerk, Lower Division -	September 12.
Penney; Reuben Henry -	Board of Trade -	Shipwright Surveyor -	January 22.
Percival; William Spencer	Consular Service -	Criminal Clerk, Supreme Court, Shanghai.	February 8.
Perkins; Alfred - -	Post Office - -	Provincial Clerk - -	October 18.
xii. Phepoe; Henry William.	- - - -	Clerk, Lower Division -	March 5.
Phillips; Richard Edwin Augustus.	War Office - -	Assistant Storekeeper, Commissariat Department, Barbadoes.	August 20.
‡Phillips; Samuel - -	- - - -	Clerk, Lower Division -	December 2.
Phillips; Thomas - -	Post Office - -	Provincial Clerk - -	November 13.
‡Phillips; Thomas Richards	Inland Revenue -	Assistant of Excise -	September 9.
‡Phillips; William Brawn -	Do. - -	Do. - - -	October 4.
‡Pickard; John - -	Customs - -	Out-door Officer - -	July 20.
Picken; Thomas - -	Post Office - -	Provincial Clerk - -	November 25.
xii. Piercey; George Edward.	- - - -	Clerk, Lower Division -	October 16.
vii. Pinches; Theophilus Goldridge.	British Museum -	Second Class Assistant -	May 7.
vii. Pincombe; David William Pendry.	Board of Trade -	Engineer Surveyor -	February 1.
‡Piper; George - -	- - - -	Clerk, Lower Division -	August 6.
Pipkin; Samuel Sewell -	Post Office - -	Provincial Boy Clerk -	May 23.
xii. Platts; Thomas - -	- - - -	Clerk, Lower Division -	September 20.
xii. Pocock; William Elliott	- - - -	Do. - - -	November 7.
‡Podmore; Frank - -	Post Office - -	Clerk, Secretary's Office -	December 31.
Pole; Arthur George -	Do. - -	Provincial Clerk - -	May 15.
Polgrean; Allan Ramsay -	Do. - -	Do. - - -	September 5.
Potter; Augustus Frederick	Do. - -	Do. - - -	October 31.
‡Potts; Thomas - -	Customs - -	Out-door Officer - -	January 8.
‡Poulton; Thomas Hill Mortimer.	- - - -	Clerk, Lower Division -	August 8.

Name.	Department and Situation.		Date of Certificate.
	Department.	Situation.	
			1878.
Powell; Edward John -	Post Office - -	Provincial Clerk - -	October 7.
†Powell; Francis - -	Colonial Office -	Straits Settlements Cadet	February 21.
Powell; William Wilfrid -	Foreign Office -	Queen's Foreign Service Messenger.	November 12.
Poynter; Leonard Ball Anderson.	Temporary Commissions.	Clerk, City Parochial Charities' Commission.	December 10.
Prain; John - - -	Post Office - -	Provincial Clerk - -	September 16.
Pretty; Henry - -	Do. - -	Do. - - -	October 29.
†Price; Ferdinando Hamlyn	Colonial Office -	Ceylon Writer - -	March 8.
†Price; Winifred Partridge	Post Office - -	Counterwoman - -	January 19.
vii. Pringle; Caroline Maria Forster.	Do. - -	Female Clerk, Accountant's Office (Edinburgh).	October 25.
‡Prior; Albert John -	- - - -	Boy Clerk, Lower Division	July 31.
Pritchard; Edward Edmond	Post Office - -	Postmaster (Stalybridge)	October 23.
Provan; William - -	Do. - -	Provincial Clerk - -	October 10.
‡Prunty; Thomas James -	- - - -	Clerk, Lower Division -	December 11.
vii. Pughe; Benjamin -	- - - -	Do. - - -	November 14.
vii. Pulfer; John William -	India Office - -	Second Class Clerk -	August 28.
‡Purchas; Francis - -	Inland Revenue -	Assistant of Excise -	September 20.
‡Purchase; Alfred Hartnell	- - - -	Clerk, Lower Division -	August 6.
†Puricelli; Nina Alicia -	Post Office - -	Female Returner - -	September 21.
Q.			
‡Quail; David William Hunter.	- - - -	Clerk, Lower Division -	November 23
Quilter; Frederick William	Post Office - -	Provincial Clerk - -	September 6.
‡Quinn; John - -	- - - -	Clerk, Lower Division -	April 12.
‡Quinn; John - -	Customs - -	Out-door Officer - -	July 10.
‡Quinn; Patrick - -	Do. - -	Do. - - -	March 22.
R.			
‡Radcliffe; Charles Thomas	- - - -	Clerk, Lower Division -	December 2.
vii. Rae; James - -	Board of Trade -	Engineer Surveyor -	February 1.
‡Rainbott; William John -	- - - -	Clerk, Lower Division -	July 30.
xii. Ralph; William George	- - - -	Do. - - -	November 7.
vii. Ramsay; James -	Board of Trade -	Engineer Surveyor -	February 1.
Rankin; Hugh - -	Post Office - -	Provincial Clerk - -	July 6.
‡Ravenscroft; Allan Cecil -	- - - -	Boy Clerk, Lower Division	August 2.
xii. Rawbone; Charles King	- - - -	Clerk, Lower Division -	November 7.
Read: John Humphrey -	Post Office - -	Provincial Clerk - -	November 2.
Read; William Duggin -	Do. - -	Do. - - -	February 16.
vii. Reed Henry Wilson -	Board of Trade -	Engineer Surveyor -	February 1.
Rees; Henry Isaac - -	Post Office - -	Provincial Clerk - -	October 30.
‡Rees; James Daniel -	- - - -	Clerk, Lower Division -	November 23.
vii. Rees; William - -	Admiralty - -	Curator in Naval Museum, Royal Naval College, Greenwich.	May 4.
Reid; John - - -	Post Office - -	Provincial Clerk - -	August 1.
Reid; Roderick - -	Do. - -	Do. - - -	November 12.
Reid; Susan - - -	Do. - -	Do. - - -	September 23.
‡Reith; James - -	Inland Revenue -	Assistant of Excise -	September 6.
Rendle; William Henry -	Post Office - -	Provincial Clerk - -	October 4.
Renshaw; Samuel Baldwin	Do. - -	Do. - - -	August 22.
‡Reynard: Robert Froding	Inland Revenue -	Assistant Surveyor of Taxes	August 12.
vii. Reynolds; Stuart Mortimer.	Board of Trade -	Shipwright Surveyor -	February 1.
Ribbands; Wolstan -	Post Office - -	Provincial Clerk - -	December 18.
‡Richards; George Walter	Office of Works -	Junior Examiner - -	June 6.
Richards; Percy - -	High Court of Justice	Clerk, Master's Office, Exchequer Division.	June 8.
xii. Richards; Thomas George.	- - - -	Clerk, Lower Division -	November 4.
vii. Richards; Thomas James	Board of Trade -	Engineer Surveyor -	February 1.
Richmond; William -	Post Office - -	Provincial Clerk - -	February 25.
Ridley; Alfred George -	Do. - -	Do. - - -	September 12.
†Ridley; Stuart Oliver -	British Museum -	Assistant, Zoological Department.	July 13.
Righton; Henry - -	Post Office - -	Provincial Clerk - -	August 12.
Righton; William - -	Do. - -	Do. - - -	July 26.
‡Riordan; John - -	Customs - -	Out-door Officer - -	January 23.
‡Riordan; Thomas - -	Do. - -	Do. - - -	April 26.
†Roberts; Benjamin -	Prison Service -	Clerk in a Prison - -	October 1.
Roberts; Frederick William	Post Office - -	Provincial Clerk - -	June 3.
‡Roberts; Richard Edmund	Customs - -	Out-door Officer - -	July 1.
Roberts; Robert - -	Post Office - -	Provincial Clerk - -	June 7.

Name.	Department and Situation.		Date of Certificate.
	Department.	Situation.	
			1878.
†Roberts; Sophia Swayne -	Post Office - -	Female Clerk, Savings Bank Department.	December 23.
Robertson; Alexander -	Do. - -	Provincial Clerk - -	February 20.
‡Robertson; Charles -	Customs - -	Out-door Officer - -	October 3.
‡Robertson; David Rollo -	Inland Revenue -	Assistant of Excise -	September 6.
‡Robertson; Frederick William.	Do. - -	Do. - - -	September 5.
Robins; John David -	Post Office - -	Provincial Clerk - -	February 21.
vii. Robinson; Charles -	Admiralty - -	Schoolmaster, Naval Prison, Lewes.	March 15.
vii. Robinson; Edward -	Prison Service -	Compounder - -	November 27.
†Robinson; Eugénie Rose Sophia.	Post Office - -	Female Clerk, Savings Bank Department.	December 23.
Robinson; John - -	Do. - -	Provincial Clerk - -	August 30.
‡Robinson; John Benjamin William.	Inland Revenue -	Assistant of Excise -	September 11.
‡Robinson; Thomas Ernest	- - - -	Clerk, Lower Division -	July 27.
Robson; William Edward -	Post Office - -	Provincial Clerk - -	December 12.
‡Rochford; James Augustine.	- - - -	Clerk, Lower Division -	November 22.
‡Rockett; Ebenezer Derry -	- - - -	Boy Clerk, Lower Division	August 2.
Rodwell; William - -	Post Office - -	Postmaster (Tring) -	February 13.
‡Roe; Robert - -	Inland Revenue -	Assistant of Excise -	September 5.
‡Roffway; James - -	- - - -	Clerk, Lower Division -	November 25.
‡Rogers; Charles Robert -	- - - -	Do. - - -	November 21.
‡Rogers; George Thomas -	- - - -	Boy Clerk, Lower Division	July 31.
‡Rogers; Henry Montague	Inland Revenue -	Assistant of Excise -	February 21.
Rogers; James - -	Post Office - -	Postmaster (Liskeard) -	February 21.
‡Rogers; Reuben Marshall	Inland Revenue -	Assistant of Excise -	February 19.
vii Rose; John Joseph -	Board of Trade -	Engineer Surveyor -	February 1.
Roskell; Richard - -	Post Office - -	Provincial Clerk - -	March 1.
‡Ross; John - - -	Inland Revenue -	Assistant of Excise -	September 13.
‡Rothwell; William Henry	Customs - -	Out-door Officer - -	June 22.
‡Round; Herbert Thomas	Office of Woods -	Junior Clerk - -	January 22.
vii. Routleff; Thomas -	Board of Trade -	Shipwright Surveyor -	February 1.
‡Routley; William John -	Inland Revenue -	Assistant of Excise -	September 13.
vii. Rowe; John Anthony -	Board of Trade -	Engineer Surveyor -	February 1.
Rowland; John William -	Post Office - -	Provincial Clerk - -	November 25.
xii. Rudd; Thomas - -	- - - -	Clerk, Lower Division -	October 16.
xii. Rule; Arthur Edward -	- - - -	Do. - - -	September 20.
xii. Russell; Charles Forster.	- - - -	Do. - - -	September 20.
‡Russell; John - -	Inland Revenue -	Assistant of Excise -	February 28.
vii. Ruston; Alfred - -	Board of Trade -	Shipwright Surveyor -	February 1.
‡Ryan; John Robert O'Donovan.	Customs - -	Out-door Officer - -	November 1.
‡Ryan; Joseph Stanislaus -	Do. - -	Do. - - -	January 21.
S.			
xii. Sadler; John Paul -	- - - -	Clerk, Lower Division -	October 16.
‡Sage; Charles Thomas -	- - - -	Boy Clerk, Lower Division	July 30.
St. John; Henry Percy -	Parliament Office -	Clerk - - -	April 23.
‡Salisbury; Edward -	Record Office (England).	Do. - - -	March 14.
Salmon; Joseph - -	Post Office - -	Provincial Clerk - -	February 22.
vii. Samson; Peter - -	Board of Trade -	Surveyor of Steam Ships -	February 1.
‡Sanderson; James - -	Customs - -	Out-door Officer - -	July 15.
‡Sandwich; William Joseph	Inland Revenue -	Assistant of Excise -	October 15.
‡Sarel; William Samuel -	- - - -	Clerk, Lower Division -	November 27.
xii. Sargeaunt; William John.	- - - -	Do. - - -	September 20.
Sarson; Joseph - -	Post Office - -	Provincial Clerk - -	October 29.
Saul; John Shuttleworth -	Do. - -	Do. - - -	June 12.
vii. Saunders; Jones -	Board of Trade -	Engineer Surveyor -	February 1.
vii. Savill; Herbert George	Metropolitan Police Courts.	Second Class Clerk -	January 29.
Savory; William - -	Post Office - -	Provincial Clerk - -	December 3.
‡Sawer; Anthony - -	Inland Revenue -	Assistant of Excise -	September 10.
Sawer; Thomas - -	Post Office - -	Provincial Clerk - -	August 21.
†Saxton; George Shadwell	Colonial Office -	Ceylon Writer - -	October 29.
xii. Schofield; George Thomas.	- - - -	Clerk, Lower Division -	September 20.
Scoins; Henry - -	Post Office - -	Provincial Clerk - -	October 17.
vii. Sconce; Gideon Colquhoun.	Board of Trade -	Nautical Surveyor -	February 1.
Scott; John - - -	Post Office - -	Provincial Clerk - -	August 1.
vii. Scott; Robert - -	Do. - -	Second Class Clerk, Surveyor General's Office (Edinburgh).	November 13.

Name.	Department and Situation.		Date of Certificate.
	Department.	Situation.	
			1878.
†Scriven; John Benfield -	Convict Service -	Clerk in a Prison - -	June 19.
‡Scutt; Samuel - -	Inland Revenue -	Assistant of Excise -	September 21.
‡Sear; Alfred - -	- - - -	Clerk, Lower Division -	November 26.
Searle; Albert Bowden -	Post Office - -	Provincial Clerk - -	April 26.
†Semple; Elizabeth Mary. -	Do. - -	Female Clerk, Receiver and Accountant General's Office.	June 21.
Shanks; Robert - -	Do. - -	Provincial Clerk - -	January 19.
vii. Shanks; Robert -	Do. - -	Postmaster (Bedford) -	May 11.
‡Sharkey; James - -	Inland Revenue -	Assistant of Excise -	September 16.
‡Sharp; William - -	Customs - -	Out-door Officer - -	July 2.
vii. Sharpe; Frederic Robert.	India Office - -	Second Class Clerk -	September 9.
xii. Shaughnessy; Edward	- - - -	Clerk, Lower Division -	November 7.
Shaw; John - - -	Post Office - -	Provincial Clerk - -	August 27.
‡Sheerin; George Patrick -	Inland Revenue -	Assistant of Excise -	April 18.
Sheridan; John Bourke -	Post Office - -	Postmaster (Castlebar) -	October 17.
‡Sherrington; John William Hickson.	- - - -	Clerk, Lower Division -	July 26.
‡Shore; Francis Albert -	Customs - -	Out-door Officer - -	September 27.
vii. Shore; William Carpenter Noel.	Exchequer and Audit Office.	Examiner, Second Section	June 1.
‡Shorey; Alexander Thomas.	- - - -	Boy Clerk, Lower Division	August 3.
†Short; Edward Morrieson de Courcy.	Colonial Office -	Ceylon Writer - -	May 15.
vii. Shrigley; Samuel -	Board of Trade -	Shipwright Surveyor -	February 1.
‡Sibley; George - -	- - - -	Clerk, Lower Division -	December 7.
Sibley; John William -	Post Office - -	Provincial Clerk - -	July 19.
‡Sidney; Henry Michael -	Inland Revenue -	Assistant of Excise -	September 19.
‡Sinclair; Frederick Charles	Do. - -	Do. - - -	September 10.
‡Sinclair; Oliver Edward -	- - - -	Clerk, Lower Division -	November 29.
Skeffington; George -	Post Office - -	Provincial Clerk - -	November 6.
‡Skerry; George Edward -	- - - -	Clerk, Lower Division -	July 31.
xii. Sketchley; Arthur Powys.	- - - -	Do. - - -	September 20.
Skinner; Joseph - -	Post Office - -	Provincial Clerk - -	September 13.
Skinner; Leonard John -	Do. - -	Provincial Boy Clerk -	November 8.
‡Skipper; Frederick James	- - - -	Clerk, Lower Division -	August 3.
vii. Sloggett; Thomas Henry	Board of Trade -	Shipwright Surveyor -	February 1.
†Sloggett; Thomas Samuel	Convict Service -	Clerk in a Prison - -	June 24.
vii. Smale; Charles - -	Prison Service -	Compounder - -	November 9.
‡Smartt; Thomas - -	Inland Revenue -	Assistant of Excise -	September 25.
Smith; Albert James -	Post Office - -	Provincial Clerk - -	August 12.
‡Smith; Arthur - -	- - - -	Clerk, Lower Division -	August 12.
vii. Smith; Charles Hubert	Board of Trade -	Engineer Surveyor -	February 1.
Smith; Frederick Henry -	Post Office - -	Provincial Clerk - -	October 7.
‡Smith; George Alexander	Customs - -	Out-door Officer - -	July 31,
‡Smith; James - -	Inland Revenue -	Assistant of Excise -	March 8.
xii. Smith; James William	- - - -	Clerk, Lower Division -	November 4.
‡Smith; John - -	Customs - -	Out-door Officer - -	March 4.
‡Smith; John - -	Do. - -	Do. - - -	October 4.
Smith; Robert - -	Education Office -	Inspector's Assistant -	February 1.
xii. Smith; Sidney - -	- - - -	Clerk, Lower Division -	March 5.
‡Smith; Thomas William -	Inland Revenue -	Assistant of Excise -	September 12.
‡Smyth; Thomas Noble -	Customs - -	Out-door Officer - -	June 20.
vii. Snowden; Samuel Wilkinson.	Board of Trade -	Engineer Surveyor -	February 1.
Snowden; Walter James -	Post Office - -	Provincial Clerk - -	October 21.
‡Sobey: Henry William -	Customs - -	Out-door Officer - -	July 24.
Sole; William - -	Post Office - -	Provincial Clerk - -	January 10.
Southwell; Henry Hunston	Do. - -	Do. - - -	November 4.
‡Sowden; Joseph Booth -	Customs - -	Out-door Officer - -	October 9.
xii. Sowray; Woodford -	- - - -	Clerk, Lower Division -	September 20.
vii. Sowter; John - -	Board of Trade -	Engineer Surveyor -	February 1.
vii. Sparrow; George -	Do. - -	Shipwright Surveyor -	February 1.
vii. Spear; John - -	Do. - -	Engineer Surveyor -	February 1.
‡Spence; William - -	Customs - -	Out-door Officer - -	July 10.
Spickett; Frederick -	Post Office - -	Provincial Clerk - -	October 24.
‡Splents; Robert - -	- - - -	Clerk, Lower Division -	December 5.
vii. Spooner; William -	Board of Trade -	Medical Inspector on Survey Staff.	April 16.
‡Spring Rice; Stephen Edward.	Treasury - -	Clerk - - -	June 3.
‡Sproule; James Irwin -	Inland Revenue -	Assistant of Excise -	September 18.
‡Sproull; Thomas James -	Do. - -	Do. - - -	October 17.
‡Stack; James - -	Customs - -	Out-door Officer - -	April 9.
xii. Stafford; Ernest William	- - - -	Clerk, Lower Division -	November 4.
Stafford; Michael - -	Post Office - -	Provincial Clerk - -	October 17.
vii. Stainsby; William -	Do. - -	Postmaster (Hartlepool)	May 22.
Stanley; William Russell -	Do. - -	Provincial Clerk - -	May 29.
‡Statham; Frederic William	Inland Revenue -	Assistant of Excise -	September 10.

Name	Department and Situation.		Date of Certificate.
	Department.	Situation.	
			1878.
Stead; John William	Post Office	Provincial Clerk	October 21.
vii. Steane; William Copley	India Office	Second Class Clerk	August 28.
vii. Steele; Lawrence	Board of Trade	Engineer Surveyor	February 1.
‡Steet; Charles Henry	- - -	Clerk, Lower Division	July 30.
†Steggall; Martha Mary Monica.	Post Office	Female Clerk, Savings Bank Department.	December 23.
Stenson; Joseph	Do.	Provincial Clerk	October 21.
xii. Stevens; Charles Frederick Almroth.	- - -	Clerk, Lower Division	September 20.
Stevenson; Thomas	Post Office	Postmaster (York)	April 27.
Stevenson; Thomas Laing	Do.	Provincial Clerk	August 1.
Stewart; Adam Gibson	Do.	Do.	January 1.
vii. Stewart; James	Board of Trade	Engineer Surveyor	February 1.
xii. Stewart, James	- - -	Clerk, Lower Division	October 16.
Stewart; Robert	Post Office	Provincial Clerk	May 7.
Stimson; William	Do.	Do.	November 11.
Stirk; Thomas John	Do.	Do.	September 20.
Stirling; Clarence Henry	Do.	Do.	October 30.
‡Stoneham; Edgar Cooper	- - -	Clerk, Lower Division	August 6.
xii. Stoneman; Henry Milford.	- - -	Do.	November 7.
vii. Storey; George	Post Office	Postmaster (Stafford)	July 17.
‡Storey; Joseph	Customs	Out-door Officer	July 9.
Stout, Robert	Post Office	Postmaster (Lerwick)	July 2.
‡Strange; Leonard	Inland Revenue	Assistant of Excise	September 7.
vii. Street, Brooks Henry George.	India Office	Second Class Clerk	September 10.
‡Stringer; Jabez	- - -	Clerk, Lower Division	November 15.
Stubbs; John	Post Office	Provincial Clerk	February 22.
‡Sulley; Philip	- - -	Clerk, Lower Division	November 25.
xii. Summers; Thomas [redacted]	- - -	Do.	October 16.
†Sutcliffe; Thomas Edward	Prison Service	Clerk in a Prison	October 4.
Swaffield; George Owen	Temporary Commissions.	Clerk to Cambridge University Commission.	April 30.
Sweltenham; Thomas	Post Office	Provincial Clerk	August 30.
Swindells; George	Do.	Do.	October 30.
vii. Symons; Gustavus	Board of Trade	Shipwright Surveyor	February 1.
T.			
‡Taffs; Alfred	Inland Revenue	Assistant of Excise	September 19.
‡Taffs; Alfred	- - -	Clerk, Lower Division	December 3.
vii. Taffs; James John	Board of Trade	Shipwright Surveyor	February 1.
†Tait; Annie	Post Office	Female Returner	September 24.
vii. Taplin; Robert Edmonds.	Board of Trade	Engineer Surveyor	February 1.
‡Tasker; John William	- - -	Boy Clerk, Lower Division	August 9.
‡Tattam; Henry Claremont	- - -	Do.	July 29.
Tattersall; James	Post Office	Postmaster (Keighley)	January 3.
vii. Taunton; Alfred George	India Office	Second Class Clerk	August 23.
‡Taylor, Arthur Folds	- - -	Clerk, Lower Division	November 26.
Taylor; Edward	Post Office	Provincial Clerk	October 1.
‡Taylor; Frank	- - -	Boy Clerk, Lower Division	August 1.
Taylor; James	Post Office	Provincial Clerk	September 16.
vii. Taylor; John Gray	Board of Trade	Surveyor of Steam Ships	February 1.
vii. Taylor; William Orcos	Do.	Engineer Surveyor	February 1.
vii. Taylor; William Joseph	Do.	Shipwright Surveyor	February 1.
xii. Temple; Henry William	- - -	Clerk, Lower Division	October 16.
‡Tennant; George	Inland Revenue	Assistant of Excise	September 14.
‡Teuton; John McIlroy	Customs	Out-door Officer	April 9.
vii. Thomas; Charles	Patent Office	Compositor or Compiler of the Trade Marks Journal in the Trade Mark [illegible]	April 3.
vii. Thomas; Henry Carleton.	Admiralty	C [illegible] ion-	June 11.
Thomas; Richard James	Post Office	P [illegible]	March 23.
‡Thomas; Thomas Roger	Customs	O [illegible]	March 21.
vii. Thomas; William Charles	Board of Trade	Si [illegible]	February 1.
‡Thomas; William Horatio	- - -	C [illegible]	November 25.
‡Thompson; James	Customs	O [illegible]	March 23.
Thompson, John	Post Office	P [illegible]	May 10.
xii. Thompson; John	- - -	C [illegible]	November 4.
Thompson; Lloyd	Post Office	P [illegible]	December 17.
Thompson; Robert	Do.		October 17.
Thompson; Samuel	Do.		October 4.
‡Thompson; William	Customs	O [illegible]	July 23.
vii. Thomson; Alexander	Scotch Education Department.	Se [illegible]	August 28.

Name.	Department and Situation.		Date of Certificate
	Department.	Situation.	
			1878.
vii. Thomson; James Kennedy.	Board of Trade -	Engineer Surveyor -	February 1.
‡Tibbs; Reginald Percy -	- - - -	Clerk, Lower Division -	December 12.
‡Tigar; Herbert Lancaster	- - - -	Do. - - -	November 30.
Tinsley; Richard - -	Post Office - -	Provincial Clerk - -	November 19.
‡Titley; Thomas - -	Customs - -	Out-door Officer - -	April 9.
Todd; Frederick William -	Post Office - -	Provincial Clerk - -	February 8.
‡Toohey; James - -	Customs - -	Out-door Officer - -	November 18.
‡Tosh; John - -	Office of Works -	Assistant to Surveyor of Works.	April 3.
Townley; Richard Greaves	Diplomatic Service -	Attaché - - -	July 29.
‡Tratman; John Noël -	Consular Service -	Student Interpreter (China).	March 26.
‡Travis; Joseph William -	- - - -	Clerk, Lower Division -	November 22.
Treglown; George John -	Post Office - -	Provincial Clerk - -	March 1.
‡Triffitt; Robert Edward -	Inland Revenue -	Assistant of Excise -	September 6.
‡Tripp; George Henry -	- - - -	Clerk, Lower Division -	July 25.
‡Tritschler; William Barr	Inland Revenue -	Assistant of Excise -	September 7.
vii. Trotter; John Glass -	Metropolitan Police Courts.	Clerk - - -	June 15.
†Trotter; Thomas Edward	Convict Service -	Clerk in a Prison - -	September 17.
‡Tulk; Arthur Albert -	Inland Revenue -	Assistant of Excise -	February 25.
Tunstall; John - -	Post Office - -	Provincial Clerk - -	August 30.
Tunstall; Leonard - -	Do. - -	Do. - - -	October 21.
‡Turner; Alfred - -	- - - -	Clerk, Lower Division -	November 25.
Turner; Charles - -	Post Office - -	Provincial Clerk - -	March 1.
‡Turner; Ernest Blaker -	Inland Revenue -	Assistant of Excise -	February 26.
Turner; Joseph - -	Post Office - -	Provincial Clerk - -	October 24.
vii. Turner; William Henry	Board of Trade -	Principal Shipwright Surveyor for Wooden Ships.	February 1.
†Twigg; Thomas McCausland.	Colonial Office -	Ceylon Writer - -	May 18.
‡Twitchett; Frederic William.	Inland Revenue -	Assistant of Excise -	September 7.
U.			
vii. Upton; George Murray	India Office - -	Second Class Clerk -	August 28.
V.			
Vance; William John -	Post Office - -	Provincial Clerk - -	October 24.
Vaughan; John - -	Do. - -	Do. - - -	September 6.
Vere; Charles - -	Temporary Commissions.	Clerk to the Criminal Code Bill Commission.	November 7.
vii. Vercoe; James - -	Board of Trade -	Engineer Surveyor -	February 1.
†Vigors; Charles Thomas Doyne.	Colonial Office -	Ceylon Writer - -	May 15.
Vyvyan; George Rawlinson	Board of Trade -	Third Class Nautical Surveyor.	January 7.
W.			
Wadhams; Joseph Hill -	Post Office - -	Provincial Clerk - -	November 25.
‡Wagstaff; William Henry	Inland Revenue -	Assistant of Excise -	September 13.
vii. Wake; Fenton - -	Board of Trade -	Nautical Surveyor -	February 1.
Wales; George Elam -	Post Office - -	Provincial Clerk - -	November 27.
‡Walke; Andrew James -	Patent Office - -	Index and Abridging Clerk	July 29.
Walker; George - -	Post Office - -	Provincial Clerk - -	October 31.
Walker; George William -	Do. - -	Do. - - -	August 30.
Waller; William - -	Do. - -	Do. - - -	October 18.
Walsh; David Richard -	Do. - -	Postmaster (Queenstown)	July 3.
‡Walsh; John - -	Customs - -	Out-door Officer - -	January 26.
‡Walshe; Thomas Francis	- - - -	Clerk, Lower Division -	December 2.
Warburton; Henry Pigot Ireland.	High Court of Justice	Clerk, Principal Registry, Probate, Divorce, and Admiralty Division.	April 27.
Ward; Joseph - -	Post Office - -	Provincial Clerk - -	February 22.
‡Ward; Joseph John -	Customs - -	Out-door Officer - -	June 27.
‡Warne; Herbert Maxwell	Treasury - -	Clerk, Solicitor's Office (London).	July 18.
Warnock; Alexander Fleming.	Post Office - -	Provincial Clerk - -	August 1.
‡Warren; George Pedlar -	Inland Revenue -	Assistant of Excise -	September 5.
Warren; Henry - -	Post Office - -	Provincial Clerk -	December 18.

Name.	Department and Situation.		Date of Certificate.
	Department.	Situation.	
			1878.
‡Warry; William - -	Consular Service -	Student Interpreter (China).	April 9.
Warwick; Thomas - -	Post Office - -	Provincial Clerk - -	November 21.
xii. Waterhouse; Richard William.	- - - -	Clerk, Lower Division -	September 20.
vii. Waterson; Charles -	Board of Trade -	Shipwright Surveyor -	February 1.
‡Watling; Albert Edward -	- - - -	Clerk, Lower Division -	November 20.
‡Watson; Leonard Towers	- - - -	Do. - - -	November 23.
Watson; William Charles -	Post Office - -	Postmaster (Greystones)	November 4.
Watt; Archibald Hamilton	Do. - -	Provincial Clerk - -	May 21.
Watt; David Robert -	Do. - -	Do. - - -	February 20.
‡Watts; Fred - -	- - - -	Clerk, Lower Division -	November 15.
Watts; Matthias David -	Post Office - -	Provincial Clerk - -	August 20.
‡Weal; Louis James -	Inland Revenue -	Assistant of Excise -	September 19.
Webb; Joseph - -	Post Office - -	Provincial Clerk - -	April 12.
‡Webb; Sidney James -	- - - -	Clerk, Lower Division -	November 22.
Webster; Albert Frederick	Post Office - -	Provincial Clerk - -	October 10.
vii. Weeks; Courtenay Osborne.	Board of Trade -	Engineer Surveyor -	February 1.
‡Weir; Henry Crichton -	Record Office (Ireland).	Clerk - - -	July 3.
Weir; John Bishop -	Post Office - -	Provincial Clerk - -	November 11.
xii. Welch; Charles Henry	- - - -	Clerk, Lower Division -	March 5.
Weller; Charles - -	Post Office - -	Provincial Clerk - -	March 22.
†Weller; Susannah Lucy -	Do. - -	Female Returner - -	September 6.
‡Wells; George Ashley -	Inland Revenue -	Assistant of Excise -	September 16.
†Wells; Thomas Henry -	Convict Service -	Clerk in a Prison - -	June 24.
‡West; Henry Thomas -	- - - -	Clerk, Lower Division -	August 2.
vii. Westaway Charles -	Board of Trade -	Shipwright Surveyor -	February 1.
‡Westlake; Robert Hole -	- - - -	Clerk, Lower Division -	August 6.
Westmorland; George -	Post Office - -	Provincial Clerk - -	October 1.
vii. Wheatley; William Coe.	Board of Trade -	Engineer Surveyor -	February 1.
Wheldon; William Dixon -	Post Office - -	Provincial Clerk - -	July 16.
‡Whitaker; Squire - -	Customs - -	Out-door Officer - -	September 21.
‡Whitbread; William Henry.	Inland Revenue -	Assistant of Excise -	September 9.
‡White; David - -	Customs - -	Out-door Officer - -	July 22.
‡Whiting; John Elliott -	Inland Revenue -	Assistant of Excise -	September 19.
‡Whitrow; James - -	Do. - -	Do. - - -	September 19.
Whittle; Edward - -	Post Office - -	Provincial Clerk - -	June 6.
‡Whyburn; William Henry	Inland Revenue -	Assistant of Excise -	September 21.
vii. Wicks: Cecilia Catherine.	Post Office - -	Female Clerk, Accountant's Office (Edinburgh).	October 25.
†Widdows; Clara Amy -	Do. - -	Female Clerk, Savings Bank Department.	December 23.
Widger; William Arthur -	Do. - -	Provincial Clerk - -	October 17.
Wigfield; Stephen John -	Do. - -	Do. - - -	October 1.
Wilde; Thomas - -	Do. - -	Do. - - -	October 1.
‡Wiley; Thomas Verner -	Inland Revenue -	Assistant of Excise -	February 27.
†Wilkins; Emma - -	Post Office - -	Female Returner - -	February 7.
vii. Wilkins; John Thomas	Board of Trade -	Shipwright Surveyor -	February 1.
Williams; Benjamin Morris	Post Office - -	Provincial Clerk - -	October 30.
vii. Williams; Charles Duffy	Board of Trade -	Surveyor of Steam Ships -	February 1.
‡Williams; Charles Frederick.	- - - -	Clerk, Lower Division -	July 27.
‡Williams; Earl Hatton -	Inland Revenue -	Assistant of Excise -	September 16.
Wiliams; John - -	Post Office - -	Provincial Clerk - -	February 16.
Williams; Thomas - -	Do. - -	Do. - - -	November 8.
vii. Williamson; Robert Tate.	Board of Trade -	Shipwright Surveyor -	February 1.
vii. Wilson; Arthur Huelin	Post Office - -	Assistant to Medical Officer.	December 10.
‡Wilson; Henry Martin Cotes.	Customs - -	Out-door Officer - -	September 26.
Wilson; Richard - -	Post Office - -	Provincial Clerk - -	October 29.
Wilson; Robert - -	Do. - -	Do. - - -	July 26.
‡Wilson; Robert William -	- - - -	Clerk, Lower Division -	July 27.
‡Wilson; William John -	Customs - -	Out-door Officer - -	Jauuary 21.
vii. Wimshurst James -	Board of Trade -	Principal Shipwright Surveyor for Iron Vessels.	February 1.
vii. Winchester; Ernest Charles.	India Office - -	Second Class Clerk -	November 4.
Winter; George - -	Post Office - -	Provincial Clerk - -	October 21.
‡Winwood; William -	Inland Revenue -	Assistant of Excise -	September 24.
Wisker; John Thomas -	Post Office - -	Provincial Clerk - -	March 1.
‡Withell; John Thomas -	Customs - -	Out-door Officer - -	July 10.
vii. Wood; George Pinckney.	India Office - -	Second Class Clerk -	August 28.
vii. Woodthorpe; William Henry.	Board of Trade -	Engineer Surveyor -	February 1.

Name.	Department and Situation.		Date of Certificate.
	Department.	Situation.	
			1878.
‡Woodward; James -	Inland Revenue -	Assistant of Excise -	September 5.
Woodward; William Henry	Post Office - -	Provincial Clerk - -	October 28.
Wrigglesworth; Thomas -	Do. - -	Do. - - -	April 2.
Wright Archibald - -	Do. - -	Do. - - -	August 1.
Wright; Elizabeth Jane Marion.	Do. - -	Do. - - -	December 14.
Wright; George William Edwin.	Do. - -	Do. - - -	August 15.
‡Wright; Thomas Howard	- - - -	Clerk, Lower Division -	December 2.
†Wroth; Warwick William	British Museum -	Assistant, Department of Coins and Medals.	July 12.
Wyard; Joseph - -	Post Office - -	Provincial Clerk - -	October 7.
‡Wylie; Robert - -	- - - -	Clerk, Lower Division -	August 28.
vii. Wymer; Francis William.	Board of Trade -	Engineer Surveyor -	February 1.
Y.			
Yarnton; Henry - -	Post Office - -	Provincial Clerk - -	November 8.
‡Youngman; Walter -	- - - -	Clerk, Lower Division -	November 26.

APPENDIX V.

MILITARY ENTRANCE EXAMINATIONS.

CONTENTS.

Page

1. Examination for the Royal Military Academy, Woolwich, and for First Appointments in the Royal Marine Artillery, March 1878* :—
   - (*a.*) Regulations - - - - - - - 236
   - (*b.*) Table of Marks - - - - - - - 242

2. Examination for the Royal Military Academy, Woolwich, and for First Appointments in the Royal Marine Artillery, July 1878* :—
   - (*a.*) Regulations - - - - - - - 246
   - (*b.*) Table of Marks - - - - - - - 252

3. Examination for the Royal Military Academy, Woolwich, and for First Appointments in the Royal Marine Artillery, December 1878* :—
   - (*a.*) Regulations - - - - - - - 256
   - (*b.*) Table of Marks - - - - - - - 262

4. Examination for the Royal Military College, and for First Appointments in the Royal Marine Light Infantry, July 1878* :—
   - (*a.*) Regulations - - - - - - - 266
   - (*b.*) Table of Marks - - - - - - - 274

5. Examination for the Royal Military College, and for First Appointments in the Royal Marine Light Infantry, November and December 1878* :—
   - (*a.*) Regulations - - - - - - - 284
   - (*b.*) Table of Marks - - - - - - - 294

6. Examination of Lieutenants of Militia for Commissions in the Army, October 1878 :—
   - (*a.*) Regulations - - - - - - - 300
   - (*b.*) List of Successful Candidates - - - - - 304

* The Examination Papers set at these competitions have been printed in a separate form, and may be obtained, through any bookseller, from W. Clowes & Sons, 13 Charing Cross; Harrison & Sons, 59, Pall Mall; W. H. Allen & Co., 13, Waterloo Place; W. Mitchell, 39, Charing Cross; Longman & Co., Paternoster Row; Trübner & Co., 57 and 59, Ludgate Hill; Stanford, Charing Cross; and C. Kegan Paul & Co., 1, Paternoste rSquare: Also from Griffin & Co., The Hard, Portsea; A. & C. Black, Edinburgh; Alex. Thom, Abbey Street; and E. Ponsonby, Grafton Street, Dublin.

ROYAL MILITARY ACADEMY, WOOLWICH, AND ROYAL MARINE ARTILLERY. March 1878.

1.—EXAMINATION OF CANDIDATES FOR ADMISSION TO THE ROYAL MILITARY ACADEMY, WOOLWICH, AND FOR FIRST APPOINTMENTS IN THE ROYAL MARINE ARTILLERY.

MARCH 1878.

Extract from the General Regulations for the Government of the Royal Military Academy at Woolwich. [*Issued with G.O. 89 of* 1876.]

2. Admission to the Royal Military Academy as cadets will be granted to the successful candidates at an open competitive examination. The examinations will be conducted by the Civil Service Commissioners, and will be held twice a year, namely, in December and July.*

3. Notice will be given from time to time of the day and place of the examinations, and of the vacancies to be competed for at each examination.

4. The limits of age will be from 16 to 18, the candidates being required to be within those limits on the 1st day of the January next following for the winter examination, and on the 1st of July for the summer examination.

5. Candidates for admission to the December or July examination must send to the Military Secretary, not later than the 15th October or 15th May respectively, an application to be examined, accompanied by the following papers :—

(*a.*) An extract from the register of his birth, or, in default, a declaration made by one of his parents or guardians before a magistrate, giving his exact age.

(*b.*) A certificate of good moral character, signed by the tutors or heads of the schools or colleges at which he has received his education from his twelfth year to the date of application, or some other satisfactory proof of good moral character.

6. When a candidate who has once been examined applies to be examined again, he will only be required to forward a certificate as to his moral character for the interval between the two examinations.

7. The number of trials allowed will not exceed three.

8. All candidates will be inspected by a medical board, and no candidate will be allowed to proceed to examination by the Civil Service Commissioners unless certified by the board to be free from bodily defects or ailments, and in all respects, as to height and physical qualities, fit for Her Majesty's Service. Cases of exceptional shortness of stature will be referred to the War Office for special consideration.

9. A candidate will be required to satisfy the Civil Service Commissioners in the following subjects :—

(1.) Mathematics, viz., (*a*) arithmetic, and the use of common logarithms ; (*b*) algebra, including equations, progressions, per-

* See Extract from G.O. 83 of 1877, p. 239.

ROYAL MILITARY ACADEMY, WOOLWICH, AND ROYAL MARINE ARTILLERY. March 1878.

mutations and combinations, and the binomial theorem; (*c*) geometry, up to the standard of the sixth book of Euclid; (*d*) plane trigonometry, including the solution of triangles.

(2.) French, German, or some other modern language, the examination being limited to translation from the language, and grammatical questions.

(3.) Writing English correctly and in a good legible hand, from dictation, and English composition.

(4.) The elements of geometrical drawing; including the construction of plane scales and the use of simple mathematical instruments.

(5.) Geography.

A thorough knowledge of each of the four branches of mathematics will be required.

The Commissioners may, however, if they think fit, dispense with this preliminary examination, except as regards mathematics, English composition, and geometrical drawing, in the case of any candidate who has satisfied them on a previous occasion.

10. No marks will be allotted for the above preliminary examination, excepting for mathematics (2,000), for English composition (500), and for geometrical drawing (300).

11. The "further examination" will be proceeded with immediately on the conclusion of the "preliminary examination." Candidates who fail in the preliminary examination will be informed of their failure as soon as possible, and they will then be released from further attendance.

12. The subjects of the further examination and the maximum number of marks obtainable for each subject will be as follows:—

	Marks.
(1.) Mathematics;* viz., further questions and problems on the subjects of the qualifying examination, and the elements of the following subjects: Theory of equations; Analytical geometry; Conic sections; Solid geometry; Differential and integral calculus; Statics; and Dynamics - - - -	4,000
N.B.—*In all the subjects great importance will be attached to accuracy in numerical results.*	
(2.) English; English literature, limited to specified authors;† and English history, limited to certain fixed periods;‡ the authors and periods being notified beforehand -	§2,000

* See detailed Syllabus, par. 14.

† The authors specified for this examination were as follows, viz.:—

Spenser - - -	Faery Queen, Book II.
Shakespeare - -	King Lear. Coriolanus.
Dryden (*Christie's Edition*)	Stanzas on Cromwell. Astrea Redux. Annus Mirabilis. Absolom and Achitophel.
Locke - - -	Essay on the Human Understanding, Book III., On Words.
Johnson's Lives - -	Dryden. Addison. Pope.
Burke - - -	Reflections on the French Revolution.
Byron - - -	Childe Harold.

‡ The period specified was A.D. 1789 to A.D. 1815, with special reference to the War in the Peninsula.

§ Including 500 allotted to English composition in the preliminary examination.

ROYAL MILITARY ACADEMY, WOOLWICH, AND ROYAL MARINE ARTILLERY. March 1878.

		Marks.
*(3.)	Classics; viz. { Latin - - - - -	2,000
	Greek - - - - -	2,000
(4.)	French; the examination to be partly colloquial -	2,000
(5.)	German; the examination to be partly colloquial -	2,000
(6.)	Any one of the following languages, at the option of the candidate, viz.: Italian, Russian, Spanish, or Hindustani; the examination to be partly colloquial -	2,000
†(7.)	Experimental sciences, viz., (*a*) chemistry and heat; or (*b*) electricity and magnetism - - -	2,000
(8.)	General and physical geography, and geology - -	2,000
(9.)	Drawing, freehand - - - - -	1,000

Of these nine subjects candidates will not be allowed to take up more than four, exclusive of drawing.

13. A certain number will be deducted from the marks gained by a candidate in each subject, except mathematics; and the remainders will be added to the marks gained by the candidate in the preliminary examination in mathematics, English composition, and geometrical drawing. The resulting total will determine the candidate's place in the competitive list; the successful candidates being those who stand first on the list up to the number of vacancies competed for.

OPTIONAL EXAMINATION IN MATHEMATICS.

Detailed Syllabus.

14. Further questions and problems on the subjects of the qualifying examination.

Theory of equations: first principles.

Solid geometry [not treated analytically], first principles, with easy exercises.

Analytical geometry: problems on straight line and circle.

Conic sections: elementary properties, with easy problems, both on the analytical and geometrical methods.

Differential calculus. Differentiation of functions of one independent variable. Taylor's and Maclaurin's theorems; applications. Maxima and minima of functions of one independent variable. Method of infinitesimals: first principles, with easy applications. Tangents and normals to curves. Points of inflexion. Curvature of curves. Involutes and evolutes.

Integral calculus. Elementary integrations. Integration considered as summation. Rectification and quadrature of plane curves.

Statics: equilibrium of forces and couples in one plane. Friction; centre of gravity; mechanical powers. Problems on elementary statics: the graphical or geometrical method of treating such problems should be studied as well as the analytical. No applications of the differential calculus to statics will be required.

Dynamics: elementary principles; projectiles; motion of a heavy particle on a smooth curve; centrifugal force; simple pendulum. Problems and exercises. No applications of the differential calculus will be required.

---

* Classics are divided into two sections, Latin and Greek, either or both of which the candidate may take up as one subject.

† Subjects (*a*) and (*b*) are alternative; a candidate will not be allowed to take up both.

ROYAL MILITARY ACADEMY, WOOLWICH, AND ROYAL MARINE ARTILLERY. March 1878.

G.O. 83 of 1877.

(1st November 1877.)

I. In consequence of an increased demand for officers of Royal Artillery and Royal Engineers there will be, during the next twelve months, three admissions to and three exits from the Royal Military Academy instead of two.

* * * * * *

III. Successful candidates at the usual winter and summer examinations will enter the Academy in January and September respectively, and an additional examination will take place early in March 1878, for admission to the Academy in May.

IV. Candidates for the examination in March must be within the regulated limits of age on the 1st of that month, and must forward to the Military Secretary, not later than the 15th of January next, their applications to be allowed to compete, accompanied by the papers required by paragraph 5 of the Regulations issued with G.O. 89 of 1876.

Extract from Regulations respecting Examinations for First Appointments to the Royal Marine Artillery. [*Admiralty*, 14*th May* 1877.]

1. Admission to the Royal Marine Artillery as probationary lieutenants will be offered to the successful candidates in order of merit (according to the number of vacancies) at the open competitive examination for admission to the Royal Military Academy at Woolwich. The examinations will be conducted by the Civil Service Commissioners, and will be held twice a year, namely, in July and December.

Candidates who have received permission from the Horse Guards to attend the examination, and who are desirous of obtaining an appointment in the Royal Marine Artillery, should send in their names to the Secretary of the Admiralty, to whom all inquiries on the subject should be addressed.

2. The limits of age will be from 16 to 18, the candidates being required to be within those limits on the 1st day of January next following for the winter examination, and on the 1st of July for the summer examination. They must be 5 ft. 5 in. in height.

3. The successful candidates will be appointed lieutenants on probation. They will proceed to the Royal Naval College, Greenwich, on the 1st October, and after the Easter vacation.

ROYAL MILITARY ACADEMY, WOOLWICH, AND ROYAL MARINE ARTILLERY. March 1878.

TIME TABLE.

The Subjects printed in Italics are obligatory.

Place.	Time.	Subject of Examination.
Royal Military Academy, Woolwich	Monday, 4th March.	Medical Examination.
The South Exhibition Galleries, South Kensington.*	Tuesday, 5th March.	
	10 a.m. to 1 p.m.	*Algebra.*
	2 p.m. to 5 p.m.	*Euclid.*
	Wednesday, 6th March.	
	10 a.m to 12.30 p.m.	*Modern Language and English Dictation.* (1.)
	2 p.m. to 4.30 p.m.	*Geography and English Dictation.* (2.)
	Thursday, 7th March.	
	10 a.m. to 1 p.m.	*Arithmetic.*
	2 p.m. to 5 p.m.	*Trigonometry.*
	Friday, 8th March.	
	10 a.m. to 1 p.m.	*Geometrical Drawing.*
	2 p.m. to 5 p.m.	*English Composition.*
	Saturday, 9th March.	
	10 a.m. to 1 p.m.	Mathematics, Pure. (1.)
	2 p.m. to 5 p.m.	Mathematics, Pure. (2.)
	Monday, 11th March.	
	10 a.m. to 1 p.m.	English Literature. (1.)
	2 p.m. to 5 p.m.	English Literature. (2.)
	Tuesday, 12th March.	
	10 a.m. to 1 p.m.	Latin (Prose).
	2 p.m. to 5 p.m.	Latin (Verse).
	Wednesday, 13th March.	
	10 a.m. to 1 p.m.	English History.
	2 p.m. to 5 p.m.	Statics.
	Thursday, 14th March.	
	10 a.m. to 1 p.m.	Dynamics.
	2 p.m. to 5 p.m.	Mathematics, Pure. (3.)
	Friday, 15th March.	
	10 a.m. to 1 p.m.	Freehand Drawing.
	2 p.m. to 5 p.m.	†French.
	Saturday, 16th March.	
	10 a.m. to 1 p.m.	†Geology and Geography.
	2 p.m. to 5 p.m.	†German.
	Monday, 18th March.	
	10 a.m. to 1 p.m.	† Chemistry and Heat. † Electricity and Magnetism.
	2 p.m. to 5 p.m.	Greek (Prose).
The London University, Burlington Gardens.	Tuesday, 19th March.	
	10 a.m. to 1 p.m.	Chemistry (Practical).
The South Exhibition Galleries, South Kensington.*	2 p.m. to 5 p.m.	Greek (Verse).
	Wednesday, 20th March.	
	10 a.m. to 1 p.m.	†Modern Language.‡

* Entrance in Exhibition Road.

† In these subjects there will be an oral examination, the time and place of which will be notified to the candidates who take them up.

‡ No candidate was examined in any modern foreign language.

NOTICES.

ROYAL MILITARY ACADEMY, WOOLWICH, AND ROYAL MARINE ARTILLERY. March 1878.

1. On the first day of the examination each candidate will be required to state on a form which will be placed before him his address during the examination. If this address is changed, notice of every change should be sent to "The Secretary, Civil Service Commission, Westminster," until the candidate has received the announcement of the result of the examination.

   N.B.—To candidates who fail to pass in any of the obligatory subjects notice of the fact will be communicated as soon as possible. Such candidates will not proceed further with the examination, and no marks will be assigned to their papers.
2. During the whole of the examination the candidates will be designated by numbers. On the first day a number will be assigned to each candidate, which will remain the same to the close of the examination; and he must affix his number (not his name) to every paper which he sends in.
3. The examination will in each case begin at the time named in the foregoing table, but the door of the examination room will be kept open for half an hour afterwards, in order that candidates may not be excluded owing to accidental delays. Candidates arriving after the expiration of that half hour will not be admitted.
4. Candidates will be required, before proceeding to the examination rooms, to leave, in a room provided for the purpose, their hats, overcoats, umbrellas, and any books or papers which they may have brought with them.
5. No candidate will be allowed to quit the examination room on any day until the expiration of half an hour from the time fixed for the commencement of the examination.
6. No candidate who has left the examination room during the hours assigned to paper work will be permitted to return to the paper which he has quitted.
7. Candidates wishing for explanation of the meaning of any of the questions before them may apply to the superintendent of the examination room. With this exception, perfect silence is to be preserved in the examination room; and any candidate guilty of disorderly or improper conduct in or about the room will be liable to be excluded from the examination.
8. Any candidate detected in the use of a book or manuscript brought with him for his assistance, or in copying from the papers of any other candidate, or in giving or receiving assistance of any description, will be regarded as disqualified, and his name will be removed from the list.
9. For the examination in geometrical drawing nothing will be required except mathematical instruments, which candidates are expected to bring with them.

   Candidates who take up freehand drawing must bring their own drawing pencils and brushes; but drawing paper, drawing boards, colours, Indian ink, and palettes will be supplied to them by the Commissioners.
10. Candidates who proceed to the "further examination" will be informed by letter from this office of their place in it. The table of marks will be published about a fortnight after the result is declared, with a reprint of the examination papers, and may then be obtained through any bookseller.

Civil Service Commission,
Cannon Row, S.W., 1878.

TABLE showing the MARKS obtained by the CANDIDATES for ADMISSION to the ROYAL MILITARY ACADEMY at WOOLWICH, and for FIRST APPOINTMENTS in the ROYAL MARINE ARTILLERY, who were examined under the directions of the Civil Service Commissioners, on 5th March 1878, and subsequent days.

*** A deduction of 250 has been made from the marks obtained in each subject except Mathematics, Geometrical Drawing, and English Composition.

SUCCESSFUL CANDIDATES.

Number in Order of Merit.	Number in Examination.	Name.	Mathematics.			English.	Latin.	Greek.	French.	German.	Experimental Sciences.	Geology and Geography.	Drawing.		Total.
			Obligatory.	Optional.	Total.								Freehand.	Geometrical.	
		Maxima - - - -	2,000	4,000	6,000	2,000	2,000	2,000	2,000	2,000	2,000	2,000	1,000	300	
1	79	Stothert; Henry Kendall - - -	2,000	3,638	5,638	*295	—	—	1,052	403	990	—	470	245	9,093
2	15	Hemming; Edward Hughes - - -	1,485	1,315	2,800	*275	1,160	926	601	—	430	—	200	250	6,642
3	37	Staley; Francis Alban - - - -	1,324	1,081	2,405	*270	764	—	1,106	963	—	—	—	140	5,638
4	19	Dames; Francis Talbot Longworth - -	1,583	2,006	3,589	626	520	—	323	—	—	—	120	195	5,323
5	64	Johnston; Thomas Kelly Evans - -	1,252	1,186	2,438	1,020	—	—	534	—	670	—	270	180	5,112
6	82	Taylor; Henry Clarence Grant - -	1,111	507	1,618	810	972	457	1,017	—	—	—	0	140	4,994
7	63	Cowie; Alexander Hugh Walters - -	1,042	293	1,335	455	1,104	991	492	—	—	—	370	105	4,852
8	28	Burt; John Marshall - - - -	1,448	920	2,368	*273	710	—	719	386	—	—	170	185	4,811
9	84	Maclagan; Robert Smeiton - - -	1,211	685	1,896	596	730	568	673	—	—	—	140	170	4,773
10	65	Tisdall; Arthur Lance - - - -	1,197	606	1,803	851	—	—	1,010	800	—	—	—	175	4,639
11	2	Grierson; George Lyon Walker - -	1,107	240	1,347	*218	474	53	991	976	—	—	370	130	4,559

* These marks were gained in English Composition in the preliminary examination.

TABLE showing the MARKS obtained by the CANDIDATES for ADMISSION to the ROYAL MILITARY ACADEMY and for FIRST APPOINTMENTS in the ROYAL MARINE ARTILLERY.—SUCCESSFUL CANDIDATES—*continued.*

Number in Order of Merit.	Number in Examination.	Name.	Mathematics. Obligatory.	Mathematics. Optional.	Mathematics. Total.	English.	Latin.	Greek.	French.	German.	Experimental Sciences.	Geology and Geography.	Drawing. Freehand.	Drawing. Geometrical.	Total.
		Maxima	2,000	4,000	6,000	2,000	2,000	2,000	2,000	2,000	2,000	2,000		300	
12	55	Crampton; Philip J. R.	1,202	320	1,522	664	—	—	1,165	406	—	—		265	4,532
13	95	Hodder; William Morgan	1,264	169	1,433	806	913	326	713	—	—	—		155	4,306
14	18	Boyd; Mossom Archibald	1,053	490	1,543	*335	—	—	777	675	455	—		245	4,330
15	22	Osborn; George	1,349	949	2,289	*178	390	0	288	—	—	856		195	4,326
16	67	Blunt; Edward Walter	1,326	358	1,684	*273	418	0	626	—	958	—		135	4,244
17	54	Guinness; Charles Davis	1,238	488	1,726	*185	551	0	1,152	452	—	—		135	4,201
18	106	Anderson; Clinton Cortlandt	1,448	1,131	2,579	497	—	—	416	235	—	—		210	4,137
19	10	Baker; Augustus Theodore	1,581	1,071	2,652	412	408	—	499	—	—	—		155	4,126
20	6	Bryant; Gilbert Edward	1,407	705	2,112	457	391	—	867	—	—	—		200	4,077
21	62	Baker; George Duff	1,302	624	1,926	*243	—	—	508	662	355	—		135	4,069
22	36	Stopford; John Montagu	1,388	304	1,692	*196	—	—	1,146	610	—	—		130	3,873
23	32	Chamier; George Daniel	1,329	903	2,232	418	—	—	483	31	—	—		210	3,734
24	87	Wood; Creighton	1,292	606	1,898	*263	0	—	913	—	—	—		240	3,674
25	104	Carnegy; Robert William Elliott	1,357	466	1,823	*185	—	—	733	497	—	—		230	3,648
26	24	Neish; Colin Graham	1,172	1,275	2,446	487	202	0	231	—	—	—		140	3,568

* These marks were gained in English Composition in the preliminary examination.

ROYAL MILITARY ACADEMY, WOOLWICH, AND ROYAL MARINE ARTILLERY. March 1878.

TABLE showing the MARKS obtained by the CANDIDATES for ADMISSION to the ROYAL MILITARY ACADEMY and for FIRST APPOINTMENTS in the ROYAL MARINE ARTILLERY.—SUCCESSFUL CANDIDATES—*continued*.

Number in Order Merit.	Number in Examination.	Name.	Mathematics.			English.	Latin.	Greek.	French.	German.	Experimental Sciences.	Geology and Geography.	Drawing.		Total.
			Obligatory.	Optional.	Total.								Freehand.	Geometrical.	
		Maxima - - - - -	2,000	4,000	6,000	2,000	2,000	2,000	2,000	2,000	2,000	2,000	1,000	300	
27	13	Prinsep; Douglas Gordon - - -	1,242	410	1,652	273	—	—	776	—	296	—	300	265	3,562
28	31	Napier; Alfred Gerard - - - -	1,063	314	1,377	483	549	190	765	—	—	—	0	130	3,494
29	11	James; William Reginald Wallwyn - -	1,084	877	1,961	473	437	—	337	—	—	—	0	185	3,393
30	75	Blair; Walter Charles Hunter - - -	1,278	379	1,657	*193	597	278	379	—	—	—	—	180	3,284
31	86	Winter; Frederick John - - -	1,223	533	1,756	*150	12	—	704	185	—	—	250	170	3,227
32	83	Tinker; Edward - - - - -	1,102	382	1,484	*223	500	—	720	—	—	—	0	170	3,097
33	4	Milward; Clement Henry; - - -	1,196	517	1,713	546	—	—	510	0	—	—	180	110	3,059
34	30	Stokes; Alfred - - - - -	1,191	509	1,700	461	—	—	514	157	—	—	0	125	2,957
35	41	Powell; Frederick Acton Lambart - -	1,426	266	1,692	186	—	—	568	184	—	—	30	160	2,820
36	25	Cockburn; William Frederick - - -	1,286	734	2,020	*158	0	—	0	—	150	—	300	155	2,783
37	77	Walker; Edmund Somerville Forestier -	1,025	268	1,293	835	—	—	418	0	—	—	0	140	2,686
38	38	Addington; Honble. Harold William - -	1,246	255	1,501	287	0	—	728	—	—	—	50	100	2,666
39	106	Bolton; William Henry Coffin - - -	1,481	422	1,903	434	—	—	0	57	—	—	—	185	2,579
40	9	Preston; d'Arcy Brownlow - - -	1,166	205	1,371	*180	—	—	735	0	—	—	0	225	2,511

* These marks were gained in English Composition in the preliminary examination.

TABLE showing the MARKS obtained by the CANDIDATES for ADMISSION to the ROYAL MILITARY ACADEMY and for FIRST APPOINTMENTS in the ROYAL MARINE ARTILLERY—*continued*.

UNSUCCESSFUL CANDIDATES.

Number in Order of Merit.	Number in Examination.	—	Mathematics.			English.	Latin.	Greek.	French.	German.	Experimental Sciences.	Geology and Geography.	Drawing.		Total.
			Obligatory.	Optional.	Total.								Freehand.	Geometrical.	
		Maxima - - - -	2,000	4,000	6,000	2,000	2,000	2,000	2,000	2,000	2,000	2,000	1,000	300	
41	98	- - - - - - - -	1,113	346	1,459	*107	—	—	0	415	—	147	180	135	2,443
42	23	- - - - - - - -	1,108	245	1,353	232	150	—	280	—	—	—	—	110	2,125
43	56	- - - - - - - -	1,061	164	1,225	269	217	—	292	—	—	—	—	110	2,113
44	76	- - - - - - - -	1,258	257	1,515	353	1	0	0	—	—	—	0	135	2,004
45	35	- - - - - - - -	1,002	181	1,183	282	—	—	0	—	0	—	30	155	1,650

* These marks were gained in English Composition in the preliminary examination.

Note.—In addition to the above, 47 candidates presented themselves, but failed to pass the preliminary examination.

ROYAL MILITARY ACADEMY, WOOLWICH, AND ROYAL MARINE ARTILLERY.
March 1878.

ROYAL MILITARY ACADEMY, WOOLWICH, AND ROYAL MARINE ARTILLERY. July 1878.

2.—EXAMINATION OF CANDIDATES FOR ADMISSION TO THE ROYAL MILITARY ACADEMY, WOOLWICH, AND FOR FIRST APPOINTMENTS IN THE ROYAL MARINE ARTILLERY.

JULY 1878.

Extract from the General Regulations for the Government of the Royal Military Academy at Woolwich. [*Issued with G.O.* 89 *of* 1876.]

REGULATIONS FOR ADMISSION, &c.

2. Admission to the Royal Military Academy as cadets will be granted to the successful candidates at an open competitive examination. The examinations will be conducted by the Civil Service Commissioners, and will be held twice a year, namely, in December and July.

3. Notice will be given from time to time of the day and place of the examinations, and of the vacancies to be competed for at each examination.

4. The limits of age will be from 16 to 18, the candidates being required to be within those limits on the first day of the January next following for the winter examination, and on the 1st of July for the summer examination.

5. Candidates for admission to the December or July examination must send to the Military Secretary, not later than the 15th October or 15th May respectively, an application to be examined, accompanied by the following papers:—

(*a.*) An extract from the register of his birth, or, in default, a declaration made by one of his parents or guardians before a magistrate, giving his exact age.

(*b.*) A certificate of good moral character, signed by the tutors or heads of the schools or colleges at which he has received his education from his twelfth year to the date of application, or some other satisfactory proof of good moral character.

6. When a candidate who has once been examined applies to be examined again, he will only be required to forward a certificate as to his moral character for the interval between the two examinations.

7. The number of trials allowed will not exceed three.

8. All candidates will be inspected by a medical board; and no candidate will be allowed to proceed to examination by the Civil Service Commissioners, unless certified by the board to be free from bodily defects or ailments, and in all respects, as to height and physical qualities, fit for Her Majesty's Service. Cases of exceptional shortness of stature will be referred to the War Office for special consideration.

9. A candidate will be required to satisfy the Civil Service Commissioners in the following subjects:—

(1.) Mathematics, viz., (*a*) arithmetic, and the use of common logarithms; (*b*) algebra, including equations progressions per-

ROYAL MILITARY ACADEMY, WOOLWICH, AND ROYAL MARINE ARTILLERY. July 1878.

mutations and combinations, and the binomial theorem; (*c*) geometry, up to the standard of the sixth book of Euclid; (*d*) plane trigonometry, including the solution of triangles.

(2.) French, German, or some other modern language, the examination being limited to translation from the language and grammatical questions.

(3.) Writing English correctly and in a good legible hand, from dictation, and English composition.

(4.) The elements of geometrical drawing; including the construction of plane scales and the use of simple mathematical instruments.

(5.) Geography.

A thorough knowledge of each of the four branches of mathematics will be required.

The Commissioners may, however, if they think fit, dispense with this preliminary examination, except as regards mathematics, English composition, and geometrical drawing, in the case of any candidate who has satisfied them on a previous occasion.

10. No marks will be allotted for the above preliminary examination, excepting for mathematics (2,000), for English composition (500), and for geometrical drawing (300).

11. The "further examination" will be proceeded with immediately on the conclusion of the "preliminary examination." Candidates who fail in the preliminary examination will be informed of their failure as soon as possible, and they will then be released from further attendance.

12. The subjects of the further examination and the maximum number of marks obtainable for each subject will be as follows:—

	Marks.
(1.) Mathematics,* viz., further questions and problems on the subjects of the qualifying examination, and the elements of the following subjects: Theory of equations; Analytical geometry; Conic sections; Solid geometry; Differential and integral calculus; Statics; and Dynamics - - - - -	4,000
N.B.—*In all the subjects great importance will be attached to accuracy in numerical results.*	
(2.) English; English literature, limited to specified authors;† and English history, limited to certain fixed periods;‡ the authors and periods being notified beforehand -	§2,000
‖(3.) Classics, viz. { Latin - - - - -	2,000
{ Greek - - - - -	2,000

* See detailed Syllabus, par. 14.

† The authors specified for this examination were as follows, viz.:—

Spenser - - -	Faery Queen, Book II.
Shakespeare - -	Richard III.
	King Lear.
Dryden (*Christie's Edition*)	Stanzas on Cromwell.
	Astrea Redux.
	Annus Mirabilis.
	Absolom and Achitophel.
Burke - - -	Letters on a Regicide Peace.
Trench - - -	On the Study of Words.

‡ The period specified was A.D. 1793 to A.D. 1820, with special reference to the War in the Peninsula.

§ Including 500 allotted to English composition in the preliminary examination.

‖ Classics are divided into two sections, Latin and Greek, either or both of which the candidate may take up as one subject.

ROYAL MILITARY ACADEMY, WOOLWICH, AND ROYAL MARINE ARTILLERY. July 1878.

		Marks.
(4.)	French; the examination to be partly colloquial -	2,000
(5.)	German; the examination to be partly colloquial -	2,000
(6.)	Any one of the following languages, at the option of the candidate, viz.: Italian, Russian, Spanish, or Hindustani; the examination to be partly colloquial -	2,000
*(7.)	Experimental sciences, viz., (*a*) chemistry and heat; or (*b*) electricity and magnetism - - -	2,000
(8.)	General and physical geography, and geology - -	2,000
(9.)	Drawing, freehand - - - - -	1,000

Of these nine subjects candidates will not be allowed to take up more than four, exclusive of drawing.

13. A certain number will be deducted from the marks gained by a candidate in each subject, except mathematics; and the remainders will be added to the marks gained by the candidate in the preliminary examination in mathematics, English composition, and geometrical drawing. The resulting total will determine the candidate's place in the competitive list; the successful candidates being those who stand first on the list up to the number of vacancies competed for.

OPTIONAL EXAMINATION IN MATHEMATICS.

Detailed Syllabus.

14. Further questions and problems on the subjects of the qualifying examination.

Theory of equations: first principles.

Solid geometry [not treated analytically], first principles with easy exercises.

Analytical geometry: problems on straight line and circle.

Conic sections: elementary properties, with easy problems, both on the analytical and geometrical methods.

Differential calculus. Differentiation of functions of one independent variable. Taylor's and Maclaurin's theorems; applications. Maxima and minima of functions of one independent variable. Method of infinitesimals: first principles, with easy applications. Tangents and normals to curves. Points of inflexion. Curvature of curves. Involutes and evolutes.

Integral calculus. Elementary integrations. Integration considered as summation. Rectification and quadrature of plane curves.

Statics: equilibrium of forces and couples in one plane. Friction; centre of gravity; mechanical powers. Problems on elementary statics: the graphical or geometrical method of treating such problems should be studied as well as the analytical. No applications of the differential calculus to statics will be required.

Dynamics: elementary principles; projectiles; motion of a heavy particle on a smooth curve; centrifugal force; simple pendulum. Problems and exercises. No applications of the differential calculus will be required.

Regulations respecting Examinations for First Appointments to the Royal Marine Artillery.

(*See* p. 239.)

---

* Subjects (*a*) and (*b*) are alternative; a candidate will not be allowed to take up both.

ROYAL MILITARY ACADEMY, WOOLWICH, AND ROYAL MARINE ARTILLERY. July 1878.

TIME TABLE.

The Subjects printed in Italics are obligatory.

Place.	Time.	Subject of Examination.
Royal Military Academy, Woolwich.	Monday, 1st July.	Medical Examination.
The South Exhibition Galleries, South Kensington.*	Tuesday, 2nd July.	
	10 a.m. to 1 p.m.	*Algebra.*
	2 p.m. to 4.30 p.m.	*Modern Language and English Dictation.* (1.)
	Wednesday, 3rd July.	
	10 a.m. to 1 p.m.	*Euclid.*
	2 p.m. to 4.30 p.m.	*Geography and English Dictation.* (2.)
	Thursday, 4th July.	
	10 a.m. to 1 p.m.	*Arithmetic.*
	2 p.m. to 5 p.m.	*Trigonometry.*
	Friday, 5th July.	
	10 a.m. to 1 p.m.	*Geometrical Drawing.*
	2 p.m. to 5 p.m.	*English Composition.*
	Saturday, 6th July.	
	10 a.m. to 1 p.m.	Mathematics, Pure. (1.)
	2 p.m. to 5 p.m.	Mathematics, Pure. (2.)
	Monday, 8th July.	
	10 a.m. to 1 p.m.	English Literature. (1.)
	2 p.m. to 5 p.m.	English Literature. (2.)
	Tuesday, 9th July.	
	10 a.m. to 1 p.m.	Latin (Prose).
	2 p.m. to 5 p.m.	Latin (Verse).
	Wednesday, 10th July.	
	10 a.m. to 1 p.m.	English History.
	2 p.m. to 5 p.m.	†French.
	Thursday, 11th July.	
	10 a.m. to 1 p.m.	Statics.
	2 p.m. to 5 p.m.	†Chemistry and Heat. †Electricity and Magnetism.
	Friday, 12th July.	
	10 a.m. to 1 p.m.	Dynamics.
The London University, Burlington Gardens.	2 p.m. to 5 p.m.	Chemistry (Practical).
The South Exhibition Galleries, South Kensington.*	Saturday, 13th July.	
	10 a.m. to 1 p.m.	†German.
	2 p.m. to 5 p.m.	†Geology and Geography.
	Monday, 15th July.	
	10 a.m. to 1 p.m.	Greek (Prose).
	2 p.m. to 5 p.m.	Greek (Verse).
	Tuesday, 16th July.	
	10 a.m. to 1 p.m.	Freehand Drawing.
	2 p.m. to 5 p.m.	Mathematics, Pure. (3.)
	Wednesday, 17th July.	
	10 a.m. to 1 p.m.	†Modern Language.

* Entrance in Exhibition Road.

† In these subjects there will be an oral examination, the time and place of which will be notified to the candidates who take them up.

ROYAL MILITARY ACADEMY, WOOLWICH, AND ROYAL MARINE ARTILLERY. July 1878.

NOTICES.

1. On the first day of the examination each candidate will be required to state on a form which will be placed before him his address during the examination. If this address is changed, notice of every change should be sent to "The Secretary, Civil Service Commission, Westminster," until the candidate has received the announcement of the result of the examination.

   N.B.—To candidates who fail to pass in any of the obligatory subjects notice of the fact will be communicated as soon as possible. Such candidates will not proceed further with the examination, and no marks will be assigned to their papers.

2. During the whole of the examination the candidates will be designated by numbers. On the first day a number will be assigned to each candidate, which will remain the same to the close of the examination; and he must affix his number (not his name) to every paper which he sends in.

3. The examination will in each case begin at the time named in the foregoing list, but the door of the examination room will be kept open for half an hour afterwards, in order that candidates may not be excluded owing to accidental delays. Candidates arriving after the expiration of that half hour will not be admitted.

4. Candidates will be required, before proceeding to the examination rooms, to leave, in a room provided for the purpose, their hats, overcoats, umbrellas, and any books or papers which they may have brought with them.

5. No candidate will be allowed to quit the examination room on any day until the expiration of half an hour from the time fixed for the commencement of the examination.

6. No candidate who has left the examination room during the hours assigned to paper work will be permitted to return to the paper which he has quitted.

7. Candidates wishing for explanation of the meaning of any of the questions before them may apply to the superintendent of the examination room. With this exception, perfect silence is to be preserved in the examination room; and any candidate guilty of disorderly or improper conduct will be liable to be excluded from the examination.

8. Any candidate detected in the use of a book or manuscript brought with him for his assistance, or in copying from the papers of any other candidate, or in giving or receiving assistance of any description, will be regarded as disqualified, and his name will be removed from the list.

9. For the examination in geometrical drawing nothing will be required except mathematical instruments, which candidates are expected to bring with them.

   Candidates who take up freehand drawing must bring their own drawing pencils and brushes; but drawing paper, drawing boards, colours, Indian ink, and palettes will be supplied to them by the Commissioners.

ROYAL MILITARY ACADEMY, WOOLWICH, AND ROYAL MARINE ARTILLERY. July 1878.

10. Candidates who proceed to the "further examination" will be informed by letter from this office of their place in it. The table of marks will be published about a fortnight after the result is declared, with a reprint of the examination papers, and may then be obtained through any bookseller.

Civil Service Commission,
Cannon Row, S.W.,
April 1878.

TABLE showing the MARKS obtained by the CANDIDATES for ADMISSION to the ROYAL MILITARY ACADEMY at WOOLWICH, and for FIRST APPOINTMENTS in the ROYAL MARINE ARTILLERY, who were examined under the directions of the Civil Service Commissioners, on 2nd July 1878, and subsequent days.

*** A deduction of 250 has been made from the marks obtained in each subject, except Mathematics, Geometrical Drawing, and English Composition.

SUCCESSFUL CANDIDATES.

Number in Order of Merit.	Number in Examination.		C	C	T	English.	Latin.	Greek.	French.	German.	Italian.	Spanish.	Experimental Sciences.	Geology and Geography.	Drawing. Freehand.	Drawing. Geometrical.	Total.
		Maxima	2,000	4,000	6,000	2,000	2,000	2,000	2,000	2,000	2,000	2,000	2,000	2,000	1,000	500	
1	112	Stewart; James	1,647	2,923	4,570	1,136	—	—	976	800	—	—	—	—	213	225	7,923
2	85	Nathan; Matthew	1,571	2,898	4,269	*335	—	—	900	1,209	—	—	846	—	180	200	7,859
3	76	Thackwell; Osbert Montague Roche	1,648	1,545	3,193	976	1,287	1,270	566	—	—	—	—	—	0	120	7,482
4	27	Stuart; Robert Charles Ochiltree	1,474	1,374	3,848	*216	—	—	737	—	—	—	1,060	1,236	338	160	7,115
5	130	Young; Ernest Temple	1,733	2,442	4,174	867	—	—	490	—	—	—	823	—	350	175	6,818
6	95	Wing; Frederick Drummond Vincent	1,706	2,160	3,866	*235	718	—	460	663	—	—	—	—	163	295	6,484
7	6	Crampton; Fiennes Henry	1,638	1,370	3,008	585	1,025	715	926	—	—	—	—	—	0	125	6,384
8	98	Benson; George Elliott	1,530	1,857	3,387	971	—	—	558	—	—	—	—	818	—	105	5,839
9	127	Watkins; Leonard George	1,082	436	1,518	960	1,296	1,192	—	622	—	—	—	—	—	100	5,687
10	136	Carte; Thomas Elliott	1,589	1,209	2,798	*278	—	—	566	475	—	—	—	902	0	100	5,419
11	126	Mellish; George Samuel	1,238	1,141	2,379	457	763	642	954	—	—	—	—	—	—	165	5,359
12	82	Lawless; S. R. G.	1,153	1,025	2,778	*240	—	—	856	472	—	—	833	—	0	100	5,281

* These marks were gained in English Composition in the preliminary examination.

TABLE showing the MARKS obtained by the CANDIDATES for ADMISSION to the ROYAL MILITARY ACADEMY and for FIRST APPOINTMENTS in the ROYAL MARINE ARTILLERY.—SUCCESSFUL CANDIDATES—*continued*.

Number in Order of Merit.	Number in Examination.	Name.	Mathematics.			English.	Latin.	Greek.	French.	German.	Italian.	Spanish.	Experimental Sciences.	Geology and Geography.	Drawing.		Total.
			Obligatory.	Optional.	Total.										Freehand.	Geometrical.	
		Maxima - - - - -	2,000	4,000	6,000	2,000	2,000	2,000	2,000	2,000	2,000	2,000	2,000	2,000	1,000	300	
13	159	Tippinge; Ernest A. G. - - - -	1,269	1,722	2,991	529	—	—	782	724	—	—	—	—	100	150	5,276
14	22	Hoste; Dixon Edward - - - - -	1,308	1,015	2,323	944	741	605	422	—	—	—	—	—	63	120	5,218
15	175	Horne; Harry Sinclair - - - -	1,550	1,022	2,572	557	1,164	—	718	—	—	—	—	—	—	180	5,191
16	115	Reeve; D'Arcy Wentworth - - -	1,535	1,394	2,929	757	—	—	1,026	—	—	—	243	—	—	105	5,060
17	143	Du Boulay; Noel Wilmot Houssemayne - -	1,338	530	1,868	446	1,055	1,050	418	—	—	—	—	—	100	105	5,042
18	141	Cooper-Key; Aston - - - - -	1,283	849	2,132	*245	986	—	826	713	—	—	—	—	—	115	5,017
19	131	Barlow; Hilaro William Wellesley - - -	1,036	—	1,036	978	698	217	946	—	—	—	792	—	150	140	4,957
20	71	Pollock; Evelyn - - - - -	1,393	1,265	2,658	*179	491	—	484	—	—	—	—	498	350	205	4,865
21	87	Warre; Annesley Tyndale - - - -	1,400	1,131	2,531	619	617	378	402	—	—	—	—	—	0	200	4,747
22	19	Head; Charles Tyrrell - - - - -	1,369	1,256	2,625	718	—	—	667	353	—	—	—	—	225	155	4,743
23	116	Carroll; Arthur Lyons - - - -	1,374	731	2,105	518	—	—	950	—	—	1,040	—	—	—	120	4,733
24	98	Weekes; Montague Morgan - - - -	1,570	1,554	3,124	*165	479	—	623	—	—	—	—	—	138	185	4,714
25	138	Kappey; Frederick George - - - -	1,192	801	1,993	378	—	—	1,010	1,120	—	—	—	—	—	125	4,626
26	45	Lewis; Percy John Touson - - - -	1,419	1,370	2,789	*268	—	—	472	494	—	—	197	—	125	115	4,460

* These marks were gained in English Composition in the preliminary examination.

ROYAL MILITARY ACADEMY, WOOLWICH, AND ROYAL MARINE ARTILLERY. July 1878.

TABLE showing the MARKS obtained by the CANDIDATES for ADMISSION to the ROYAL MILITARY ACADEMY and for FIRST APPOINTMENTS in the ROYAL MARINE ARTILLERY.—SUCCESSFUL CANDIDATES—*continued*.

Number in Order of Merit.	Number in Examination.	Name.	Mathematics.			English.	Latin.	Greek.	French.	German.	Italian.	Spanish.	Experimental Sciences.	Geology and Geography.	Drawing.		Total.
			Obligatory.	Optional.	Total.										Freehand.	Geometrical.	
		Maxima - - - - - -	2,000	4,000	6,000	2,000	2,000	2,000	2,000	2,000	2,000	2,000	2,000	2,000	1,000	300	
27	47	Briscoe; Alexander Villiers - - - -	1,422	1,276	2,698	664	—	—	421	300	—	—	—]	—	225	100	4,408
28	118	Butcher; Arthur Edward Aveling - - -	1,203	1,324	2,527	446	—	—	234	—	—	—	—	1,017	0	120	4,344
29	9	Churchill; Arthur Benjamin Norton - -	1,291	941	2,232	854	—	—	424	—	—	—	—	651	0	185	[4,326
30	148	Hawkins; Henry Theodore - - - -	1,306	500	1,806	676	889	0	462	—	—	—	—	—	250	100	4,273
31	25	St. John; George Francis William - -	1,275	1,380	2,655	538	—	—	410	353	—	—	—	—	150	105	4,211
32	103	McMahon; John Joseph - - - -	1,126	1,477	2,603	*244	609	4	630	—	—	—	0	—	—	115	4,205
33	139	Molesworth; Arthur L. - - - -	1,321	738	2,059	464	—	—	470	—	—	—	858	—	100	125	4,076
34	165	Perceval; Edward Maxwell - - - -	1,363	853	2,216	205	558	—	546	—	—	—	—	—	400	125	4,050
35	68	Bond; Ralph Francis Lavier McGeough - -	1,003	321	1,324	*232	153	—	1,090	1,140	—	—	—	—	0	110	4,049
36	180	Wiseman-Clarke; Charles Camden - - -	1,250	120	1,370	548	—	—	866	702	—	—	—	—	300	150	3,936
37	81	Brook-Smith; Wilfred Lionel - - -	1,028	340	1,368	*226	—	—	822	972	—	—	—	—	250	125	3,763
38	16	Vores; Charles Henry Stiverd - - -	1,009	485	1,494	766	—	—	530	—	—	—	623	—	200	110	3,723
39	108	Birch; Henry George - - - - -	1,209	932	2,141	673	276	—	464	—	—	—	—	—	—	160	3,714
40	135	Le Quesne; James Simeon Cunynghame - -	1,051	216	1,267	*199	—	—	902	648	—	—	382	—	194	100	3,692

* These marks were gained in English Composition in the preliminary examination.

TABLE showing the MARKS obtained by the CANDIDATES for ADMISSION to the ROYAL MILITARY ACADEMY and for FIRST APPOINTMENTS in the ROYAL MARINE ARTILLERY—*continued*.

UNSUCCESSFUL CANDIDATES.

Number in Order of Merit.	Number in Examination.	—	Mathematics.			English.	Latin.	Greek.	French.	German.	Italian.	Spanish.	Experimental Sciences.	Geology and Geography.	Drawing.		Total.
			Obligatory.	Optional.	Total.										Freehand.	Geometrical.	
		Maxima - -	2,000	4,000	6,000	2,000	2,000	2,000	2,000	2,000	2,000	2,000	2,000	2,000	1,000	300	
41	80	- - - -	1,219	459	1,678	933	612	—	230	—	—	—	—	—	0	125	3,578
42	50	- - - -	1,125	428	1,553	268	705	207	688	—	—	—	—	—	0	125	3,546
43	168	- - - -	1,109	301	1,410	576	—	—	686	620	—	—	—	—	0	125	3,417
44	163	- - - -	1,318	1,130	2,448	158	0	—	286	—	—	—	—	—	200	150	3,242
45	177	- - - -	1,292	1,348	2,640	*130	—	—	290	0	—	—	—	—	—	155	3,215
46	113	- - - -	1,115	527	1,642	*272	349	—	342	—	—	—	—	390	0	100	3,095
47	77	- - - -	1,367	526	1,893	411	196	—	364	—	—	—	—	—	0	100	2,964
48	{154	- - - -	1,246	637	1,883	229	—	—	254	155	—	—	—	—	250	155	2,926
	{162	- - - -	1,272	445	1,717	*167	—	—	494	388	—	—	—	—	—	160	2,926
50	119	- - - -	1,256	335	1,591	*158	467	77	138	—	—	—	—	201	0	135	2,767
51	96	- - - -	1,113	10	1,123	*267	684	0	542	—	—	—	—	—	0	130	2,746
52	150	- - - -	1,158	190	1,348	249	—	—	598	420	—	—	—	—	0	105	2,720
53	90	- - - -	1,125	57	1,182	275	516	—	546	—	—	—	—	—	—	100	2,619
54	121	- - - -	1,357	697	2,054	*154	—	—	238	0	—	—	0	—	—	145	2,571
55	172	- - - -	1,283	472	1,755	*132	—	—	334	—	—	—	0	180	—	145	2,546
56	104	- - - -	1,012	202	1,214	755	78	—	370	—	—	—	—	—	—	115	2,532
57	158	- - - -	1,125	174	1,299	230	—	—	730	—	—	—	—	—	0	150	2,409
58	3	- - - -	1,075	503	1,578	192	—	—	273	238	—	—	—	—	—	105	2,386
59	99	- - - -	1,002	356	1,358	*228	204	0	417	—	—	—	—	—	63	100	2,370

* These marks were gained in English Composition in the preliminary examination.

In addition to the above, 113 candidates presented themselves but failed to pass the preliminary examination.

ROYAL MILITARY ACADEMY, WOOLWICH, AND ROYAL MARINE ARTILLERY.
July 1878.

TABLE showing the MARKS obtained by the CANDIDATES for ADMISSION to the ROYAL MILITARY ACADEMY and for FIRST APPOINTMENTS in the ROYAL MARINE ARTILLERY.—SUCCESSFUL CANDIDATES—*continued*.

Number in Order of Merit.	Number in Examination.	Name.	Mathematics.			English.	Latin.	Greek.	French.	German.	Italian.	Spanish.	Experimental Sciences.	Geology and Geography.	Drawing.		Total.
			Obligatory.	Optional.	Total.										Freehand.	Geometrical.	
		Maxima - - - - -	2,000	4,000	6,000	2,000	2,000	2,000	2,000	2,000	2,000	2,000	2,000	2,000	1,000	300	
27	47	Briscoe; Alexander Villiers - - - -	1,422	1,276	2,698	664	—	—	421	300	—	—	—	—	225	100	4,408
28	118	Butcher; Arthur Edward Aveling - - -	1,203	1,324	2,527	446	—	—	234	—	—	—	—	1,017	0	120	4,344
29	9	Churchill; Arthur Benjamin Norton - -	1,291	941	2,232	854	—	—	424	—	—	—	—	651	0	185	4,326
30	148	Hawkins; Henry Theodore - - - -	1,306	500	1,806	676	889	0	462	—	—	—	—	—	250	100	4,273
31	25	St. John; George Francis William - -	1,275	1,380	2,655	538	—	—	410	353	—	—	—	—	150	105	4,211
32	103	McMahon; John Joseph - - - -	1,126	1,477	2,603	*244	609	4	630	—	—	—	0	—	—	115	4,205
33	139	Molesworth; Arthur L. - - - -	1,321	738	2,059	464	—	—	470	—	—	—	858	—	100	125	4,076
34	165	Perceval; Edward Maxwell - - - -	1,363	853	2,216	205	558	—	546	—	—	—	—	—	400	125	4,050
35	68	Bond; Ralph Francis Lavier McGeough - -	1,003	321	1,324	*232	153	—	1,090	1,140	—	—	—	—	0	110	4,049
36	180	Wiseman-Clarke; Charles Camden - - -	1,250	120	1,370	548	—	—	866	702	—	—	—	—	300	150	3,936
37	31	Brook-Smith; Wilfred Lionel - - -	1,028	340	1,368	*226	—	—	822	972	—	—	—	—	250	125	3,763
38	16	Vores; Charles Henry Stiverd - - -	1,009	485	1,494	766	—	—	530	—	—	—	633	—	200	110	3,723
39	108	Birch; Henry George - - - - -	1,209	932	2,141	673	276	—	464	—	—	—	—	—	—	160	3,714
40	135	Le Quesne; James Simeon Cunynghame - -	1,051	216	1,267	*199	—	—	902	648	—	—	382	—	194	100	3,692

* These marks were gained in English Composition in the preliminary examination.

TABLE showing the MARKS obtained by the CANDIDATES for ADMISSION to the ROYAL MILITARY ACADEMY and for FIRST APPOINTMENTS in the ROYAL MARINE ARTILLERY—*continued*.

UNSUCCESSFUL CANDIDATES.

Number in Order of Merit.	Number in Examination.	Mathematics.		English.	Latin.	Greek.	French.	German.	Italian.	Spanish.	Experimental Science.	Geology and Geography.	Drawing.		Total.
		Optional.	Total.										Freehand.	Geometrical.	
		4,000	6,000	2,000	2,000	2,000	2,000	2,000	2,000	2,000	2,000	3,000	1,000	200	
41	50	459	1,678	933	612	207	230						0	135	3,673
42	166	488	1,653	906	706		899						0	153	3,544
43	165	301	1,410	876	*		696	480					0	135	3,417
44	171	1,130	2,445	188	349		295	0					260	150	3,342
45	175	1,345	2,640	*130	196		240					300		165	3,215
46	113	527	1,648	*278			264						0	100	3,095
47	174	695	1,583	411			264	145						135	3,004
48	177	697	1,903	329			494	888					260	150	2,996
49	154	446	1,717	*197			138						0	135	2,767
50	139	838	1,691	*158	497	77	345					291		135	2,746
51	156	10	1,153	*267	684		588	480					*	120	2,730
52	90	190	1,345	349			545							105	2,619
53	211	67	1,183	276	616		256	0						100	2,571
54	178	697	2,084	*154			554					190		145	2,546
55	104	472	1,753	*138	78		570					0		145	2,538
56	158	202	1,814	755			780	258						115	2,469
57	88	174	1,260	230			573						0	150	2,406
58	99	503	1,575	299			417							105	2,396
59	98	356	1,568	*328	994	0								100	2,370

* These marks were gained in English Composition in the preliminary examination.

In addition to the above, 113 candidates presented themselves but failed to pass the preliminary examination.

ROYAL MILITARY ACADEMY, WOOLWICH, AND ROYAL MARINE ARTILLERY. July 1878.

ROYAL MILITARY ACADEMY, WOOLWICH, AND ROYAL MARINE ARTILLERY. Dec. 1878.

3.—EXAMINATION OF CANDIDATES FOR ADMISSION TO THE ROYAL MILITARY ACADEMY, WOOLWICH, AND FOR FIRST APPOINTMENTS IN THE ROYAL MARINE ARTILLERY.

DECEMBER 1878.

Extract from the General Regulations for the Government of the Royal Military Academy at Woolwich. [*Issued with G.O.* 89 *of* 1876.]

2. Admission to the Royal Military Academy as cadets will be granted to the successful candidates at an open competitive examination. The examinations will be conducted by the Civil Service Commissioners, and will be held twice a year, namely, in December and July.*

3. Notice will be given from time to time of the day and place of the examinations, and of the vacancies to be competed for at each examination.

4. The limits of age will be from 16 to 18, the candidates being required to be within those limits on the 1st day of the January next following for the winter examination, and on the 1st of July for the summer examination.

5. Candidates for admission to the December or July examination must send to the Military Secretary, not later than the 15th October or 15th May respectively, an application to be examined, accompanied by the following papers:—

(*a.*) An extract from the register of his birth, or, in default, a declaration made by one of his parents or guardians before a magistrate, giving his exact age.

(*b.*) A certificate of good moral character, signed by the tutors or heads of the schools or colleges at which he has received his education from his twelfth year to the date of application, or some other satisfactory proof of good moral character.

---

* EXTRACT from GENERAL ORDER by His Royal Highness the Field Marshal Commanding-in-Chief.—[G.O. Royal Military Academy. (Specially issued, 20th September 1878.)]

I. In consequence of an increased demand for officers of Royal Artillery and Royal Engineers there will be, during the next twelve months, three admissions to and three exits from the Royal Military Academy, instead of two.

II. There will be three terms, as follows, viz.:—

1st term.—From 19th September to about 17th December 1878.
2nd term.—From about 13th January 1879 to 8th April 1879.
3rd term.—From about 1st May 1879 to 29th July 1879.

III. Successful candidates at the usual winter and summer examinations will enter the Academy in January and September respectively, and an additional examination will take place early in March 1879, for admission to the Academy in May.

IV. Candidates for the examination in March must be within the regulated limits of age on the 1st of that month, and must forward to the Military Secretary, not later than the 15th of January next, their applications to be allowed to compete, accompanied by the papers required by paragraph 5 of the Regulations issued with G.O. 89 of 1876.

6. When a candidate who has once been examined applies to be examined again, he will only be required to forward a certificate as to his moral character for the interval between the two examinations.

7. The number of trials allowed will not exceed three.

8. All candidates will be inspected by a medical board; and no candidate will be allowed to proceed to examination by the Civil Service Commissioners, unless certified by the board to be free from bodily defects or ailments, and in all respects, as to height and physical qualities, fit for Her Majesty's Service. Cases of exceptional shortness of stature will be referred to the War Office for special consideration.

9. A candidate will be required to satisfy the Civil Service Commissioners in the following subjects:—

(1.) Mathematics, viz., (*a*) arithmetic, and the use of common logarithms; (*b*) algebra, including equations, progressions, permutations and combinations, and the binominal theorem; (*c*) geometry, up to the standard of the sixth book of Euclid; (*d*) plane trigonometry, including the solution of triangles.

(2.) French, German, or some other modern language, the examination being limited to translation from the language, and grammatical questions.

(3.) Writing English correctly and in a good legible hand, from dictation, and English composition.

(4.) The elements of geometrical drawing; including the construction of plane scales and the use of simple mathematical instruments.

(5.) Geography.

A thorough knowledge of each of the four branches of mathematics will be required.

The Commissioners may, however, if they think fit, dispense with this preliminary examination, except as regards mathematics, English composition, and geometrical drawing, in the case of any candidate who has satisfied them on a previous occasion.

10. No marks will be allotted for the above preliminary examination, excepting for mathematics (2,000), for English composition (500), and for geometrical drawing (300).

11. The "further examination" will be proceeded with immediately on the conclusion of the "preliminary examination." Candidates who fail in the preliminary examination will be informed of their failure as soon as possible, and they will then be released from further attendance.

12. The subjects of the further examination and the maximum number of marks obtainable for each subject will be as follows:—

	Marks.
(1.) Mathematics,* viz., further questions and problems on the subjects of the qualifying examination, and the elements of the following subjects: Theory of equations; Analytical geometry; Conic sections; Solid geometry; Differential and integral calculus; Statics; and Dynamics - - - - -	4,000

N.B.—*In all the subjects great importance will be attached to accuracy in numerical results.*

* See detailed Syllabus, par. 14 (p. 258).

ROYAL MILITARY ACADEMY, WOOLWICH, AND ROYAL MARINE ARTILLERY. Dec. 1878.

	Marks.
(2.) English; English literature, limited to specified authors;* and English history, limited to certain fixed periods;† the authors and periods being notified beforehand -	‡2,000
§(3.) Classics, viz. { Latin - - - -	2,000
{ Greek - - - -	2,000
(4.) French; the examination to be partly colloquial -	2,000
(5.) German; the examination to be partly colloquial -	2,000
(6.) Any one of the following languages, at the option of the candidate, viz.: Italian, Russian, Spanish, or Hindustani; the examination to be partly colloquial -	2,000
‖(7.) Experimental sciences, viz., (*a*) chemistry and heat; or (*b*) electricity and magnetism - - -	2,000
(8.) General and physical geography, and geology - -	2,000
(9.) Drawing, freehand - - - - -	1,000

Of these nine subjects candidates will not be allowed to take up more than four, exclusive of drawing.

13. A certain number will be deducted from the marks gained by a candidate in each subject, except mathematics; and the remainders will be added to the marks gained by the candidate in the preliminary examination in mathematics, English composition, and geometrical drawing. The resulting total will determine the candidate's place in the competitive list; the successful candidates being those who stand first on the list up to the number of vacancies competed for.

OPTIONAL EXAMINATION IN MATHEMATICS.

Detailed Syllabus.

14. Further questions and problems on the subjects of the qualifying examination.

Theory of equations: first principles.

Solid geometry [not treated analytically], first principles, with easy exercises.

Analytical geometry: problems on straight line and circle.

Conic sections: elementary properties, with easy problems, both on the analytical and geometrical methods.

Differential calculus. Differentiation of functions of one independent variable. Taylor's and Maclaurin's theorems; applications. Maxima and minima of functions of one independent variable. Method of infinitesimals: first principles, with easy applications. Tangents and normals to curves. Points of inflexion. Curvature of curves. Involutes and evolutes.

Integral calculus. Elementary integrations. Integration considered as summation. Rectification and quadrature of plane curves.

---

* The authors specified for this examination were as follows, viz.:—

Shakespeare - -	Richard III.
	Macbeth.
Milton - - -	Paradise Lost, Books I. and II.
Burke - - -	Letters on a Regicide Peace.
Macaulay - - -	Essay on Warren Hastings.
	Biography of William Pitt.
Trench - - -	On the Study of Words.

† The period specified was A.D. 1793 to A.D. 1820, with special reference to the War in the Peninsula.

‡ Including 500 allotted to English composition in the preliminary examination.

§ Classics are divided into two sections, Latin and Greek, either or both of which the candidate may take up as one subject.

‖ Subjects (*a*) and (*b*) are alternative; a candidate will not be allowed to take up both.

ROYAL MILITARY ACADEMY, WOOLWICH, AND ROYAL MARINE ARTILLERY. Dec. 1878.

Statics: equilibrium of forces and couples in one plane. Friction; centre of gravity; mechanical powers. Problems on elementary statics: the graphical or geometrical method of treating such problems should be studied as well as the analytical. No applications of the differential calculus to statics will be required.

Dynamics: elementary principles; projectiles; motion of a heavy particle on a smooth curve; centrifugal force; simple pendulum. Problems and exercises. No applications of the differential calculus will be required.

Extract from Regulations respecting Examinations for First Appointments to the Royal Marine Artillery. [*Admiralty*, 14*th May*, 1877.]

1. Admission to the Royal Marine Artillery as probationary lieutenants will be offered to the successful candidates in order of merit (according to the number of vacancies) at the open competitive examination for admission to the Royal Military Academy at Woolwich. The examinations will be conducted by the Civil Service Commissioners, and will be held twice a year, namely, in July and December.

Candidates who have received permission from the Horse Guards to attend the examination, and who are desirous of obtaining an appointment in the Royal Marine Artillery, should send in their names to the Secretary of the Admiralty, to whom all inquiries on the subject should be addressed.

2. The limits of age will be from 16 to 18, the candidates being required to be within those limits on the 1st day of January next following for the winter examination, and on the 1st of July for the summer examination. They must be 5 ft. 5 in. in height.

3. The successful candidates will be appointed lieutenants on probation. They will proceed to the Royal Naval College, Greenwich, on the 1st October, and after the Easter vacation.

TIME TABLE.

The Subjects printed in Italics are obligatory.

Place.	Time.	Subjects of Examination.
Royal Military Academy, Woolwich - -	Thursday, 28th Nov.	Medical Examination.
	Friday, 29th Nov.	
	10 a.m. to 12.30 p.m.	*Modern Language and English Dictation.* (1.)
	2 p.m. to 4.30 p.m.	*Geography and English Dictation.* (2.)
	Saturday, 30th Nov.	
	10 a.m. to 1 p.m.	*Algebra.*
	2 p.m. to 5 p.m.	*Euclid.*
	Monday, 2nd Dec.	
	10 a.m. to 1 p.m.	*Arithmetic.*
	2 p.m. to 5 p.m.	*Trigonometry.*
	Tuesday, 3rd Dec.	
	10 a.m. to 1 p.m.	*Geometrical Drawing.*
	2 p.m. to 5 p.m.	*English Composition.*

ROYAL MILITARY ACADEMY, WOOLWICH, AND ROYAL MARINE ARTILLERY. Dec. 1878.

Place.	Time.	Subject of Examination.
The South Exhibition Galleries, South Kensington.* [Except in the case of the Examination in Practical Chemistry, for which see below.]	Wednesday, 4th Dec.	
	10 a.m. to 1 p.m.	English Literature. (1.)
	2 p.m. to 5 p.m.	English Literature. (2.)
	Thursday, 5th Dec.	
	10 a.m. to 1 p.m.	English History.
	2 p.m. to 5 p.m.	Mathematics, Pure. (1.)
	Friday, 6th Dec.	
	10 a.m. to 1 p.m.	Latin (Prose).
	2 p.m. to 5 p.m.	Latin (Verse).
	Saturday, 7th Dec.	
	10 a.m. to 1 p.m.	Mathematics, Pure. (2.)
	2 p.m. to 5 p.m.	†French.
	Monday, 9th Dec.	
	10 a.m. to 1 p.m.	Statics.
	2 p.m. to 5 p.m.	†German.
	Tuesday, 10th Dec.	
	10 a.m. to 1 p.m.	†Geology and Geography.
	2 p.m. to 5 p.m.	†Chemistry and Heat. †Electricity and Magnetism.
	Wednesday, 11th Dec.	
	10 a.m. to 1 p.m.	Greek (Prose).
	2 p.m. to 5 p.m.	Greek (Verse).
	Thursday, 12th Dec.	
	10 a.m. to 1 p.m.	Dynamics.
	2 p.m. to 5 p.m.	Practical Chemistry (*at the London University, Burlington Gardens*).
	Friday, 13th Dec.	
	10 a.m. to 1 p.m.	Freehand Drawing.
	2 p.m. to 5 p.m.	Mathematics, Pure. (3.)
	Saturday, 14th Dec.	
	10 a.m. to 1 p.m.	†Modern Language.

NOTICES.

1. On the first day of the examination each candidate will be required to state on a form which will be placed before him his address during the examination. If this address is changed, notice of every change should be sent to "The Secretary, Civil Service Commission, Westminster," until the candidate has received the announcement of the result of the examination.

   N.B.—To candidates who fail to pass in any of the obligatory subjects notice of the fact will be communicated as soon as possible. Such candidates will not proceed further with the examination, and no marks will be assigned to their papers.

* Entrance in Exhibition Road.

† In these subjects there will be an oral examination, the time and place of which will be notified to the candidates who take them up.

ROYAL MILITARY ACADEMY, WOOLWICH, AND ROYAL MARINE ARTILLERY. Dec. 1878.

2. During the whole of the examination the candidates will be designated by numbers. On the first day a number will be assigned to each candidate, which will remain the same to the close of the examination; and he must affix his number (not his name) to every paper which he sends in.

3. The examination will in each case begin at the time named in the foregoing list, but the door of the examination room will be kept open for half an hour afterwards, in order that candidates may not be excluded owing to accidental delays. Candidates arriving after the expiration of that half hour will not be admitted.

4. Candidates will be required, before proceeding to the examination rooms, to leave, in a room provided for the purpose, their hats, overcoats, umbrellas, and any books or papers which they may have brought with them.

5. No candidate will be allowed to quit the examination room on any day until the expiration of half an hour from the time fixed for the commencement of the examination.

6. No candidate who has left the examination room during the hours assigned to paper work will be permitted to return to the paper which he has quitted.

7. Candidates wishing for explanation of the meaning of any of the questions before them may apply to the superintendent of the examination room. With this exception, perfect silence is to be preserved in the examination room; and any candidate guilty of disorderly or improper conduct will be liable to be excluded from the examination.

8. Any candidate detected in the use of a book or manuscript brought with him for his assistance, or in copying from the papers of any other candidate, or in giving or receiving assistance of any description, will be regarded as disqualified, and his name will be removed from the list.

9. For the examination in geometrical drawing nothing will be required except mathematical instruments, which candidates are expected to bring with them.

Candidates who take up freehand drawing must bring their own drawing pencils and brushes; but drawing paper, drawing boards, colours, Indian ink, and palettes will be supplied to them by the Commissioners.

10. Candidates who proceed to the "further examination" will be informed by letter from this office of their place in it. A table of marks will also be published, together with a reprint of the examination papers, about a fortnight after the result is declared, and may then be obtained through any bookseller.

Civil Service Commission,
Cannon Row, S.W.,
August 1878.

ROYAL MILITARY ACADEMY, WOOLWICH, AND ROYAL MARINE ARTILLERY. Dec. 1878.

Place.	Time.	Subject of Examination.
The South Exhibition Galleries, South Kensington.* [Except in the case of the Examination in Practical Chemistry, for which see below.]	Wednesday, 4th Dec.	
	10 a.m. to 1 p.m.	English Literature. (1.)
	2 p.m. to 5 p.m.	English Literature. (2.)
	Thursday, 5th Dec.	
	10 a.m. to 1 p.m.	English History.
	2 p.m. to 5 p.m.	Mathematics, Pure. (1.)
	Friday, 6th Dec.	
	10 a.m. to 1 p.m.	Latin (Prose).
	2 p.m. to 5 p.m.	Latin (Verse).
	Saturday, 7th Dec.	
	10 a.m. to 1 p.m.	Mathematics, Pure. (2.)
	2 p.m. to 5 p.m.	†French.
	Monday, 9th Dec.	
	10 a.m. to 1 p.m.	Statics.
	2 p.m. to 5 p.m.	†German.
	Tuesday, 10th Dec.	
	10 a.m. to 1 p.m.	†Geology and Geography.
	2 p.m. to 5 p.m.	†Chemistry and Heat. †Electricity and Magnetism.
	Wednesday, 11th Dec.	
	10 a.m. to 1 p.m.	Greek (Prose).
	2 p.m. to 5 p.m.	Greek (Verse).
	Thursday, 12th Dec.	
	10 a.m. to 1 p.m.	Dynamics.
	2 p.m. to 5 p.m.	Practical Chemistry (*at the London University, Burlington Gardens*).
	Friday, 13th Dec.	
	10 a.m. to 1 p.m.	Freehand Drawing.
	2 p.m. to 5 p.m.	Mathematics, Pure. (3.)
	Saturday, 14th Dec.	
	10 a.m. to 1 p.m.	†Modern Language.

NOTICES.

1. On the first day of the examination each candidate will be required to state on a form which will be placed before him his address during the examination. If this address is changed, notice of every change should be sent to "The Secretary, Civil Service Commission, Westminster," until the candidate has received the announcement of the result of the examination.

   N.B.—To candidates who fail to pass in any of the obligatory subjects notice of the fact will be communicated as soon as possible. Such candidates will not proceed further with the examination, and no marks will be assigned to their papers.

* Entrance in Exhibition Road.

† In these subjects there will be an oral examination, the time and place of which will be notified to the candidates who take them up.

ROYAL MILITARY ACADEMY, WOOLWICH, AND ROYAL MARINE ARTILLERY. Dec. 1878.

2. During the whole of the examination the candidates will be designated by numbers. On the first day a number will be assigned to each candidate, which will remain the same to the close of the examination; and he must affix his number (not his name) to every paper which he sends in.

3. The examination will in each case begin at the time named in the foregoing list, but the door of the examination room will be kept open for half an hour afterwards, in order that candidates may not be excluded owing to accidental delays. Candidates arriving after the expiration of that half hour will not be admitted.

4. Candidates will be required, before proceeding to the examination rooms, to leave, in a room provided for the purpose, their hats, overcoats, umbrellas, and any books or papers which they may have brought with them.

5. No candidate will be allowed to quit the examination room on any day until the expiration of half an hour from the time fixed for the commencement of the examination.

6. No candidate who has left the examination room during the hours assigned to paper work will be permitted to return to the paper which he has quitted.

7. Candidates wishing for explanation of the meaning of any of the questions before them may apply to the superintendent of the examination room. With this exception, perfect silence is to be preserved in the examination room; and any candidate guilty of disorderly or improper conduct will be liable to be excluded from the examination.

8. Any candidate detected in the use of a book or manuscript brought with him for his assistance, or in copying from the papers of any other candidate, or in giving or receiving assistance of any description, will be regarded as disqualified, and his name will be removed from the list.

9. For the examination in geometrical drawing nothing will be required except mathematical instruments, which candidates are expected to bring with them.

   Candidates who take up freehand drawing must bring their own drawing pencils and brushes; but drawing paper, drawing boards, colours, Indian ink, and palettes will be supplied to them by the Commissioners.

10. Candidates who proceed to the "further examination" will be informed by letter from this office of their place in it. A table of marks will also be published, together with a reprint of the examination papers, about a fortnight after the result is declared, and may then be obtained through any bookseller.

Civil Service Commission,
Cannon Row, S.W.,
August 1878.

ROYAL MILITARY ACADEMY, WOOLWICH, AND ROYAL MARINE ARTILLERY. Dec. 1878.

Place.	Time.	Subject of Examination.
The South Exhibition Galleries, South Kensington.* [Except in the case of the Examination in Practical Chemistry, for which see below.]	Wednesday, 4th Dec.	
	10 a.m. to 1 p.m.	English Literature. (1.)
	2 p.m. to 5 p.m.	English Literature. (2.)
	Thursday, 5th Dec.	
	10 a.m. to 1 p.m.	English History.
	2 p.m. to 5 p.m.	Mathematics, Pure. (1.)
	Friday, 6th Dec.	
	10 a.m. to 1 p.m.	Latin (Prose).
	2 p.m. to 5 p.m.	Latin (Verse).
	Saturday, 7th Dec.	
	10 a.m. to 1 p.m.	Mathematics, Pure. (2.)
	2 p.m. to 5 p.m.	†French.
	Monday, 9th Dec.	
	10 a.m. to 1 p.m.	Statics.
	2 p.m. to 5 p.m.	†German.
	Tuesday, 10th Dec.	
	10 a.m. to 1 p.m.	†Geology and Geography.
	2 p.m. to 5 p.m.	†Chemistry and Heat. †Electricity and Magnetism.
	Wednesday, 11th Dec.	
	10 a.m. to 1 p.m.	Greek (Prose).
	2 p.m. to 5 p.m.	Greek (Verse).
	Thursday, 12th Dec.	
	10 a.m. to 1 p.m.	Dynamics.
	2 p.m. to 5 p.m.	Practical Chemistry (*at the London University, Burlington Gardens*).
	Friday, 13th Dec.	
	10 a.m. to 1 p.m.	Freehand Drawing.
	2 p.m. to 5 p.m.	Mathematics, Pure. (3.)
	Saturday, 14th Dec.	
	10 a.m. to 1 p.m.	†Modern Language.

NOTICES.

1. On the first day of the examination each candidate will be required to state on a form which will be placed before him his address during the examination. If this address is changed, notice of every change should be sent to "The Secretary, Civil Service Commission, Westminster," until the candidate has received the announcement of the result of the examination.

   N.B.—To candidates who fail to pass in any of the obligatory subjects notice of the fact will be communicated as soon as possible. Such candidates will not proceed further with the examination, and no marks will be assigned to their papers.

* Entrance in Exhibition Road.

† In these subjects there will be an oral examination, the time and place of which will be notified to the candidates who take them up.

ROYAL MILITARY ACADEMY, WOOLWICH, AND ROYAL MARINE ARTILLERY. Dec. 1878.

2. During the whole of the examination the candidates will be designated by numbers. On the first day a number will be assigned to each candidate, which will remain the same to the close of the examination; and he must affix his number (not his name) to every paper which he sends in.

3. The examination will in each case begin at the time named in the foregoing list, but the door of the examination room will be kept open for half an hour afterwards, in order that candidates may not be excluded owing to accidental delays. Candidates arriving after the expiration of that half hour will not be admitted.

4. Candidates will be required, before proceeding to the examination rooms, to leave, in a room provided for the purpose, their hats, overcoats, umbrellas, and any books or papers which they may have brought with them.

5. No candidate will be allowed to quit the examination room on any day until the expiration of half an hour from the time fixed for the commencement of the examination.

6. No candidate who has left the examination room during the hours assigned to paper work will be permitted to return to the paper which he has quitted.

7. Candidates wishing for explanation of the meaning of any of the questions before them may apply to the superintendent of the examination room. With this exception, perfect silence is to be preserved in the examination room; and any candidate guilty of disorderly or improper conduct will be liable to be excluded from the examination.

8. Any candidate detected in the use of a book or manuscript brought with him for his assistance, or in copying from the papers of any other candidate, or in giving or receiving assistance of any description, will be regarded as disqualified, and his name will be removed from the list.

9. For the examination in geometrical drawing nothing will be required except mathematical instruments, which candidates are expected to bring with them.

   Candidates who take up freehand drawing must bring their own drawing pencils and brushes; but drawing paper, drawing boards, colours, Indian ink, and palettes will be supplied to them by the Commissioners.

10. Candidates who proceed to the "further examination" will be informed by letter from this office of their place in it. A table of marks will also be published, together with a reprint of the examination papers, about a fortnight after the result is declared, and may then be obtained through any bookseller.

Civil Service Commission,
Cannon Row, S.W.,
August 1878.

ROYAL MILITARY ACADEMY, WOOLWICH, AND ROYAL MARINE ARTILLERY. Dec. 1878.

TABLE showing the MARKS obtained by the CANDIDATES for ADMISSION to the ROYAL MILITARY ACADEMY at WOOLWICH, and for FIRST APPOINTMENTS in the ROYAL MARINE ARTILLERY, who were examined under the directions of the Civil Service Commissioners on 29th November 1878, and subsequent days.

*** A deduction of 250 has been made from the marks obtained in each subject except Mathematics, Geometrical Drawing, and English Composition.

SUCCESSFUL CANDIDATES.

Number in Order of Merit.	Number in Examination.	Name.	Mathematics.			English.	Latin.	Greek.	French.	German.	Italian.	Experimental Sciences.	Geology and Geography.	Drawing.		Total.
			Obligatory.	Optional.	Total.									Freehand.	Geometrical.	
		Maxima - - -	2,000	4,000	6,000	2,000	2,000	2,000	2,000	2,000	2,000	2,000	2,000	1,000	300	
1	85	Baddeley; Charles Edward - -	1,517	2,328	3,845	*245	—	—	1,148	1,585	993	—	—	250	230	8,296
2	52	Kincaid; William F H Style	1,725	1,657	3,382	*241	—	—	1,222	1,270	1,117	—	—	188	218	7,638
3	97	Bethell; Henry Arthur - - -	1,346	1,699	3,045	*395	—	—	1,224	1,455	—	—	1,215	88	188	7,610
4	86	Aylmer; Fenton John - - -	1,762	2,637	4,399	*180	767	—	772	—	—	846	—	0	238	7,202
5	82	Dixon; Peter Eden - - - -	1,669	2,518	4,187	*364	814	0	669	—	—	—	848	—	208	7,090
6	39	Fuller; Franklyn Bland - - -	1,355	805	2,160	590	1,168	1,497	730	—	—	—	—	663	110	6,918
7	156	Renny; Sidney Mercer - - -	1,706	2,173	3,879	550	—	—	718	—	—	462	—	700	295	6,604
8	44	Fuller; Richard Woodfield - -	1,335	1,933	3,268	531	—	—	744	—	—	—	1,080	—	235	5,808
9	84	Baillie; Augustus Charles - - -	1,234	1,135	2,369	395	—	—	1,060	1,390	—	—	—	438	155	5,807
10	3	Haynes; Alfred Ernest - - -	1,587	2,054	3,641	*245	176	—	315	—	—	—	807	325	240	5,749
11	99	Hamilton; Claude de Courcy - -	1,420	2,281	3,701	493	—	—	564	690	—	—	—	0	190	5,638
12	2	English; Charles Ernest - - -	1,221	405	1,626	565	1,285	1,366	497	—	—	—	—	0	233	5,572

* These marks were gained in English Composition in the preliminary examination.

TABLE showing the MARKS obtained by the CANDIDATES for ADMISSION to the ROYAL MILITARY ACADEMY and for FIRST APPOINTMENTS in the ROYAL MARINE ARTILLERY.—SUCCESSFUL CANDIDATES—*continued.*

Number in Order of Merit.	Number in Examination.	Name.	Mathematics.			English.	Latin.	Greek.	French.	German.	Italian.	Experimental Sciences.	Geology and Geography.	Drawing.		Total.
			Obligatory.	Optional.	Total.									Freehand.	Geometrical.	
		Maxima - - -	2,000	4,000	6,000	2,000	2,000	2,000	2,000	2,000	2,000	2,000	2,000	1,000	300	
13	31	Dawkins; John Windham G. - -	1,220	819	2,039	*236	680	—	1,055	1,190	—	—	—	163	165	5,528
14	129	Wynne; John George Erskine - -	1,278	876	2,154	*212	781	—	932	1,220	—	—	—	0	105	5,404
15	137	Stanford; Henry Bedell - - -	1,069	1,314	2,383	*276	783	0	940	780	—	—	—	0	110	5,272
16	53	Capper; John Edward - - -	1,160	242	1,402	490	1,019	1,038	—	—	—	742	—	300	260	5,251
17	145	Wingate; Francis Reginald - -	1,595	1,166	2,761	601	—	—	943	770	—	—	—	—	135	5,210
18	105	Paget; Victor Frederick William Augustus	1,004	295	1,299	*135	—	—	1,040	1,290	1,126	—	—	0	178	5,068
19	131	Maunsell; Francis Richard - -	1,140	1,255	2,395	790	—	—	707	—	—	626	—	338	185	5,041
20	72	Duhan; William Waugh Taylor - -	1,488	1,869	3,357	520	99	—	—	820	—	—	—	0	178	4,974
21	47	Carr; Robert Cattley - - -	1,326	1,164	2,490	*151	596	91	255	—	—	—	784	0	240	4,597
22	49	Clark; Charles Cosby Stewart - -	1,306	1,384	2,690	487	—	—	512	440	—	—	—	225	231	4,585
23	22	Johnson; Frank Ernest - - -	1,194	1,842	3,036	355	—	—	460	—	—	386	—	125	145	4,507
24	64	Meeres; Charles Stuart - - -	1,303	1,590	2,893	396	—	—	532	—	—	407	—	63	170	4,461
25	111	Rowan; Thomas Thompson - -	1,582	1,644	3,226	451	186	—	861	—	—	—	—	13	190	4,427
26	146	Rhodes; Bernard Maitland - -	1,557	984	2,541	345	393	—	777	—	—	—	—	—	255	4,311

* These marks were gained in English Composition in the preliminary examination.

ROYAL MILITARY ACADEMY, WOOLWICH, AND ROYAL MARINE ARTILLERY. Dec. 1878.

TABLE showing the MARKS obtained by the CANDIDATES for ADMISSION to the ROYAL MILITARY ACADEMY and for FIRST APPOINTMENTS in the ROYAL MARINE ARTILLERY.—SUCCESSFUL CANDIDATES—*continued*.

Number in Order of Merit.	Number in Examination.	Name.	Mathematics.			English.	Latin.	Greek.	French.	German.	Italian.	Sciences. Experimental	Geography and Geology.	Drawing.		Total.
			Obligatory.	Optional.	Total.									Freehand.	Geometrical.	
		Maxima - - - -	2,000	4,000	6,000	2,000	2,000	2,000	2,000	2,000	2,000	2,000	2,000	1,000	300	
27	139	Tucker; Frederick St. George - -	1,393	505	1,898	*254	677	—	445	580	—	--	—	75	150	4,079
28	76	Brownlow; Harry Blaikie - -	1,302	824	2,126	503	606	0	593	—	—	—	—	25	195	4,048
29	89	Bickford; Edward - - - -	1,143	1,082	2,225	399	542	—	—	—	—	—	610	—	235	4,011
30	16	Griffin; William Wandby - -	1,166	781	1,947	*147	83	0	636	—	—	—	1,005	—	115	3,933
31	134	Weguelin; Bernard Henry - -	1,257	428	1,685	411	882	—	768	—	—	—	—	0	155	3,901
32	75	Bower; Francis Chivers - - -	1,063	727	1,790	302	644	354	491	—	—	—	--	75	165	3,821
33	127	Martel; Charles Philip - - -	1,119	548	1,667	348	720	0	905	—	—	—	—	—	170	3,810
34	101	Strange; Robert George - - -	1,289	73	1,362	420	—	—	946	475	—	—	—	338	175	3,716
35	110	Mullins; Arthur John - - -	1,284	823	2,107	413	—	—	415	640	—	—	—	—	130	3,705
36	100	Nowlan; Thomas Bowman - -	1,110	723	1,833	*211	627	—	576	—	—	332	—	0	110	3,689
37	66	Brooke; Edward Sabine - - -	1,026	294	1,320	220	—	—	833	1,090	—	—	—	—	140	3,603
38	78	Best; Thomas George - - -	1,103	676	1,779	309	307	—	594	—	—	—	—	338	250	3,577
39	88	Morris; Robert - - - -	1,463	731	2,194	586	43	—	625	—	—	—	—	—	100	3,548
40	151	Rippon; George - - - -	1,227	442	1,669	*131	—	—	470	—	—	—	1,030	0	178	3,478

* These marks were gained in English Composition in the preliminary examination.

TABLE showing the MARKS obtained by the CANDIDATES for ADMISSION to the ROYAL MILITARY ACADEMY and for FIRST APPOINTMENTS in the ROYAL MARINE ARTILLERY—*continued.*

UNSUCCESSFUL CANDIDATES.

Number in Order of Merit.	Number in Examination.		Mathematics.			English.	Latin.	Greek.	French.	German.	Italian.	Sciences. Experimental	Geography and Geology.	Drawing.		Total.
			Obligatory.	Optional.	Total.									Freehand.	Geometrical.	
		Maxima - -	2,000	4,000	6,000	2,000	2,000	2,000	2,000	2,000	2,000	2,000	2,000	1,000	300	
41	23	- - - - -	1,369	641	2,010	314	—	—	547	410	—	—	—	0	145	3,426
42	157	- - - - -	1,044	—	1,044	209	677	374	292	—	—	582	—	100	123	3,401
43	33	- - - - -	1,043	12	1,055	538	—	—	766	—	—	—	751	0	168	3,278
44	35	- - - - -	1,024	437	1,461	560	—	—	515	425	—	—	—	138	140	3,239
45	96	- - - - -	1,171	124	1,295	170	931	0	687	—	—	—	—	—	150	3,233
46	113	- - - - -	1,130	—	1,130	122	—	—	500	1,160	—	0	—	150	155	3,217
47	109	- - - - -	1,023	312	1,335	288	700	—	388	—	—	—	—	350	120	3,181
48	40	- - - - -	1,174	300	1,474	420	532	—	418	—	—	—	—	0	205	3,049
49	115	- - - - -	1,194	161	1,355	190	—	—	679	680	—	—	—	25	115	3,044
50	102	- - - - -	1,212	955	2,167	168	241	0	239	—	—	—	—	—	205	3,020
51	54	- - - - -	1,195	1,110	2,305	181	—	—	337	10	—	—	—	—	110	2,943
52	152	- - - - -	1,291	783	2,074	141	—	—	265	—	—	0	—	0	175	2,655
53	78	- - - - -	1,030	288	1,318	281	536	—	278	—	—	—	—	0	145	2,558
54	79	- - - - -	1,032	78	1,110	272	575	—	452	—	—	—	—	—	120	2,529
55	60	- - - - -	1,078	432	1,510	310	133	19	356	—	—	—	—	0	160	2,488
56	107	- - - - -	1,233	184	1,417	384	—	—	226	—	—	—	321	—	125	2,473
57	138	- - - - -	1,067	147	1,214	186	—	—	244	—	—	—	435	—	180	2,259
58	4	- - - - -	1,087	241	1,328	339	56	—	409	—	—	—	—	—	100	2,232
59	71	- - - - -	1,225	335	1,560	178	—	—	124	70	—	—	—	63	160	2,155
60	32	- - - - -	1,106	45	1,151	186	—	—	446	—	—	0	—	163	205	2,151
61	77	- - - - -	1,092	248	1,340	145	176	0	151	—	—	—	—	0	110	1,922
62	58	- - - - -	1,355	—	1,355	*86	—	—	—	—	—	—	—	—	145	1,586

* These marks were gained in English Composition in the preliminary examination.

Note.—In addition to the above, 82 candidates presented themselves, but failed to pass the preliminary examination.

ROYAL MILITARY ACADEMY, WOOLWICH, AND ROYAL MARINE ARTILLERY.
Dec. 1878.

ROYAL MILITARY COLLEGE, AND ROYAL MARINE LIGHT INFANTRY. July 1878.

4.—EXAMINATION OF CANDIDATES FOR ADMISSION TO THE ROYAL MILITARY COLLEGE, SANDHURST, AND FOR FIRST APPOINTMENTS TO THE ROYAL MARINE LIGHT INFANTRY.

JULY 1878.

REGULATIONS.

Extract from the Regulations respecting Examinations for Admission to the Royal Military College and for First Appointments therefrom to the Army. [*Issued with G.O.* 88 *of* 1876.]

II. REGULATIONS FOR ADMISSION.

1. GENERAL INSTRUCTIONS.

3. Admission to the Royal Military College as cadets will be granted,—

(*a.*) To a successful candidate at a competitive examination in general subjects to be held under such regulations as may be issued from time to time.

(*b.*) To a graduate in Arts at the universities of Oxford, Cambridge, Durham, London, Dublin, Edinburgh, St. Andrew's, Glasgow, Aberdeen, and the Queen's University, Ireland, or to a student who has passed "moderations" at Oxford, the "previous "examination" at Cambridge, the "final examination of the "senior freshman year" at Dublin, "the first year's examina-"tion" at Durham, "the first university examination in "Arts or in engineering" at Queen's University, Ireland, the "examination for candidates for the army" at Scotch universities, and the "first examination" for the degrees of B.A., LL.B., B.Sc., or M.B., at London University; subject in each case to the competitive examination prescribed by paragraph 22.

(*c.*) To cadets styled "Queen's cadets"; "honorary Queen's cadets"; "Indian cadets"; and to pages of honour.

4. The number of cadets admitted to the College will vary according to the requirements of the service.

5. The dates of admission will be the 10th February and 1st September in each year.

6. The examinations of candidates for admission to the Royal Military College as cadets will be conducted by the Civil Service Commissioners, and will take place twice a year, in the months of December and July.

7. Notice will be given from time to time of the day and place of the examinations, and of the number of vacancies open to competition at each periodical examination.

8. The number of trials allowed will not exceed two in the case of university candidates, and three in that of other candidates.

9. All candidates will be inspected by a medical board; and no candidate will be considered eligible for a commission unless certified by the board to be free from any bodily defects or ailments, and in all respects, as to height and physical qualities, fit for Her Majesty's Service.

Cases of exceptional shortness of stature will be referred to the War Office for special consideration.

ROYAL MILITARY COLLEGE, AND ROYAL MARINE LIGHT INFANTRY. July 1878.

10. The limits of age for candidates for admission to the Royal Military College by competition, for Queen's cadets, Queen's honorary cadets, Indian cadets, and pages of honour, will be from 17 to 20; for students of the universities who shall have passed the interim examination as specified in paragraph 3 (*b*), from 17 to 21; and for graduates of the universities who shall have passed the examination for the degree of B.A. or M.A., from 17 to 22.

11. Competitors who desire to obtain commissions in West India regiments may be admitted up to the age of 24. This extension of the limit of age will not apply to university candidates.

12. Candidates must be within the prescribed limits of age on the following dates:—

Candidates for admission by competition, Queen's cadets, Queen's honorary cadets, Indian cadets, and pages of honour - - -	On the 1st of January next following the winter examination, and on the 1st of July for the midsummer examination.
Graduates and students from the universities - - - -	As specified in para. 21.

2. EXAMINATION OF CANDIDATES FOR ADMISSION BY OPEN COMPETITION.

*13. A candidate for admission by competition at the December or July examination must send to the Military Secretary, not later than the 15th October or 15th May respectively, an application to be examined, accompanied by the following papers:—

(*a*.) An extract from the register of his birth; or, in default, a declaration made by one of his parents or guardians before a magistrate, giving his exact age.

(*b*.) A certificate of good moral character, signed by the tutors or heads of the schools or colleges at which he has received his education from his twelfth year to the date of application, or some other satisfactory proof of good moral character.

*14. When a candidate who has once been examined applies to be examined again, he will only be required to forward a certificate as to his moral character for the interval between the two examinations.

*15. A candidate will be required to satisfy the Civil Service Commissioners in the following subjects:—

(1.) Mathematics,—viz., (*a*) arithmetic, including vulgar and decimal fractions, proportion, and simple interest; (*b*) geometry, not beyond the standard of the first book of Euclid.

(2.) French, German, or some other modern language; the examination being limited to a translation from the language, and grammatical questions.

(3.) Writing English correctly, and in a good legible hand, from dictation.

(4.) The elements of geometrical drawing; including the construction of scales, and the use of simple mathematical instruments.

(5.) Geography.

*16. No marks will be allotted for the above preliminary examination, excepting for geometrical drawing, the maximum number for which will

---

* Paragraphs 13–17 have been modified (see p. 270).

ROYAL MILITARY COLLEGE, AND ROYAL MARINE LIGHT INFANTRY. July 1878.

be 300. The preliminary examination will be dispensed with in the case of candidates who have passed it at previous examinations, but they may again take up geometrical drawing if they wish to obtain marks in that subject.

*17. The "further examination" will be proceeded with immediately on the conclusion of the "preliminary examination." Candidates who fail in the preliminary examination will be informed of their failure as soon as possible, and they will then be released from further attendance.

18. The subjects of the further examination, and the maximum number of marks obtainable for each subject, will be as follows:—

	Marks.
(1.) Mathematics,—viz., algebra, up to and including quadratic equations; the theory and use of logarithms; geometry; plane trigonometry; and mensuration	3,000
(2.) English composition, tested by the power of writing an essay, letter, or précis; English literature, limited to specified authors†; and English history, limited to certain fixed periods‡; the authors and periods being notified beforehand	3,000
(3.) Latin	3,000
(4.) Greek	2,000
(5.) French; the examination to be partly colloquial	2,000
(6.) German; the examination to be partly colloquial	2,000
§(7.) Experimental sciences, viz., (*a*) chemistry and heat; or (*b*) electricity and magnetism	2,000
(8.) General and physical geography, and geology	2,000
(9.) Drawing, freehand	1,000

Of these nine subjects candidates will not be allowed to take up more than four nor less than two, exclusive of drawing.

19. In order to secure a proper proficiency in all the subjects taken up by a candidate, a certain number will be deducted from the marks gained by the candidate in each subject.

20. The following will be the mode of selecting the successful candidates at the open competitive examination. After the proper deduction (in accordance with paragraph 19) has been made from the number of marks gained by each candidate in the several subjects in which he has been examined, the remainders will be summed up, and the marks gained by the candidate, in geometrical drawing, at the preliminary examination will be added thereto. The resulting total will determine the place of the candidate in the competitive list; the successful candidates being those who stand at the head of the list up to the number of cadetships competed for.

---

* Paragraphs 13–17 have been modified (see p. 270).

† The authors specified for the examination were as follows, viz.:—

Spenser	Faery Queen, Book II.
Shakespeare	Richard III.
	King Lear.
Dryden (*Christie's Edition*)	Stanzas on Cromwell.
	Astrea Redux.
	Annus Mirabilis.
	Absolom and Achitophel.
Burke	Letters on a Regicide Peace.
Trench	On the Study of Words.

‡ The period specified was A.D. 1793 to A.D. 1820, with special reference to the War in the Peninsula.

§ Subjects (*a*) and (*b*) are alternative; a candidate will not be allowed to take up both.

3. Examination of University Candidates.

Royal Military College, and Royal Marine Light Infantry. July 1878.

21. A graduate or student of one of the universities specified in paragraph 3 who, having obtained his university qualification while within the maximum limit of age specified in paragraph 10, is desirous of becoming a candidate for a cadetship at the Royal Military College, must send an application to the Military Secretary in the month of May or October, with a view to his appointment under the provisions of paragraph 22; but no such application can be admitted before the candidate has actually attained the age of 17, nor later than the 31st of May or 31st October next following the date of his attaining the maximum limits of age prescribed for graduates and students, respectively, in paragraph 10. The application must be accompained by papers (*a*) and (*b*) described in paragraph 13, and by a certificate from the proper authority that he has taken his degree in Arts, or has passed the university examination specified in paragraph 3 (*b*).

22. Notice will be given from time to time of the number of cadetships which will be allotted half-yearly to university candidates. In case there should be more candidates than vacancies, the required number will be selected by competition among the said candidates at the ensuing July or December examination, but without a preliminary examination, except in geometrical drawing, which is obligatory. University candidates who may have been unsuccessful at their first examination will be allowed a second opportunity of competing, provided that "students" shall not have exceeded their twenty-second year, and that "graduates" shall not have exceeded their twenty-third year, at the time of such second examination. These limits of age will be ruled by the 1st July for the summer and by the 1st January for the winter examinations.

4. Examination of Queen's and Indian Cadets and Pages of Honour.

23. Queen's cadets are sons of officers of the Army, Royal Navy, and Royal Marines, who have fallen in action, or died of wounds received in action, or of disease contracted on service abroad, and who have left their families in reduced circumstances. They are appointed by the Secretary of State on the recommendation of the Commander-in-Chief or First Lord of the Admiralty.

24. Honorary Queen's cadets are sons of officers of the Army, Royal Navy, and Royal Marines who were killed in action or who had died of wounds received in action within six months of such wounds having been received, or of illness brought on by fatigue, privation, or exposure incident to active operations in the field before an enemy, within six months after their having been first certified to be ill. (*See* Article 5 of the Royal Warrant of 27th November 1873, clause 151, Army Circulars, 1873.)

25. Applications for Queen's cadetships and honorary Queen's cadetships should be addressed to the Military Secretary, if the candidate is the son of an officer of the Army, or to the Secretary of the Admiralty, if the candidate is the son of an officer of the Royal Navy or Royal Marines.

26. Indian cadets are the sons of persons who have served in India in the military or civil service of Her Majesty, or of the East India Company, and are nominated by the Secretary of State for India in Council, under the provisions of 21 & 22 Vict. c. 106. and 23 & 24 Vict. c. 100. Applications for Indian cadetships should be addressed to the Military Secretary, India Office.

ROYAL MILITARY COLLEGE, AND ROYAL MARINE LIGHT INFANTRY. July 1878.

27. A Queen's cadet, honorary Queen's cadet, Indian cadet, or page of honour, when ready for examination, will apply in the manner directed by paragraph 13 or 14.

28. Queen's cadets, honorary Queen's cadets, Indian cadets, and pages of honour, before admission to the Royal Military College, will be required to pass a qualifying entrance examination only—*i.e.*, after having passed the preliminary examination under paragraph 15, they must obtain under paragraphs 18 and 19 such an aggregate of marks as may indicate in the judgment of the Civil Service Commissioners a competent amount of general proficiency.

29. A Queen's cadet, honorary Queen's cadet, Indian cadet, or page of honour, who can produce a University certificate, as prescribed in paragraph 3 (*b*), will be exempted from the qualifying entrance examination described in the preceding paragraph.

The following General Order (69 *of* 1877) *modifies paragraphs* 13 *to* 17 *of the Regulations issued with General Order* 88 *of* 1876.

G.O. 69.—EXAMINATION FOR ADMISSION TO THE ROYAL MILITARY COLLEGE.

I. After the examination in July 1878, the "preliminary" will be separated from the "further" or competitive portion of the examination for admission to the Royal Military College.

II. Special preliminary examinations will be held in the spring and autumn of each year by the Civil Service Commissioners, to whom intending candidates should apply.

III. The further examinations will be held half-yearly, in the months of July and December, as at present; and candidates for those examinations are to apply to the Military Secretary, as prescribed by existing regulations.

IV. No candidate will be allowed to attend the "further" until he has passed the "preliminary" examination, or can produce a certificate as laid down in para. V.

V. Candidates will be exempted from the "preliminary" examination, in all subjects except Geometrical Drawing, if they can produce the certificate of the Oxford and Cambridge Schools Examination Board, provided it embraces Mathematics. If it does not include that subject, they will be required also to undergo an examination therein.

Paragraph V. *of the above General Order comes into operation at once, but the other paragraphs will not apply until after July* 1878.

MILITIA.

(*These Regulations will not apply after the end of* 1878.)

Regulations respecting the Examination of Lieutenants of Militia recommended for Commissions in the Regular Army. [*Issued with G.O.* 8 *of* 1877.]

1. Notice will be given from time to time to officers commanding Militia regiments whenever they will be permitted to recommend a lieutenant for a commission as 2nd lieutenant in the Army.

2. A lieutenant of Militia so recommended must not be less than 19 nor more than 22 years of age on the 1st of May of the year in

ROYAL MILITARY COLLEGE, AND ROYAL MARINE LIGHT INFANTRY. July 1878.

which he is nominated (except officers who entered the Militia between 16th February and 1st November 1871 inclusive, who are eligible up to the age of 23), and before he can be granted a commission in the Army he will be required :—

(*a.*) To have served two annual trainings with his Militia regiment.

(*b.*) To pass the qualifying examination before the Civil Service Commission described in paragraph 9, or to produce a university certificate as prescribed in paragraph 12.

(*c.*) To produce a certificate from a board of examination that he is thoroughly acquainted with the following subjects :*—

The first two parts of the "Field Exercises of the Infantry" and the command of a company in battalion.

Rifle drill and practice; and the theoretical principles of musketry, as defined in the authorised book of instructions.

The duties of regimental orderly officers, of officers commanding guards, and of subaltern officers of guards under officers of superior rank; and the mode of marching reliefs and posting sentries.

Those parts of the Queen's Regulations and Orders for the Army which relate to the duties and conduct of a subaltern officer; and the Mutiny Act and Articles of War, so far as is necessary for the performance of the duties of a member of a court-martial.

The regulations for the Army in regard to the pay and messing of the troops, the supply of clothing and necessaries, and all details regarding the mode of carrying the various articles of the soldier's kit, arms, accoutrements, and ammunition.

(*d.*) To be recommended by his commanding officer, the recommendation being confirmed by the officer commanding the subdistrict and the general officer commanding the district.†

3. A Militia candidate will be required to satisfy the Civil Service Commission in the following subjects :—

(1.) Mathematics,—viz., (*a*) arithmetic, including vulgar and decimal fractions, proportion, and simple interest; (*b*) geometry, not beyond the standard of the first book of Euclid.

(2.) French, German, or some other modern language; the examination being limited to a translation from the language, and grammatical questions.

(3.) Writing English correctly, and in a good legible hand, from dictation.

(4.) The elements of geometrical drawing; including the construction of scales, and the use of simple mathematical instruments.

(5.) Geography.

4. All the subjects of the above preliminary examination are obligatory, but no marks will be allotted excepting for geometrical drawing, the maximum number for which will be 300.

---

* When an officer has within two years obtained a certificate of qualification in drill from a school of instruction or from a board of officers, he will be examined only in such of the required subjects as he has not already passed in.

† In the case of the Channel Islands Militia, the recommendation must be confirmed by the Lieutenant-Governor.

ROYAL MILITARY COLLEGE, AND ROYAL MARINE LIGHT INFANTRY. July 1878.

5. The preliminary examination will be dispensed with in all subjects except geometrical drawing in the case of candidates who have passed it at previous examinations.

6. The "further examination" will be proceeded with immediately on the conclusion of the "preliminary examination." Candidates who fail in the preliminary examination will be informed of their failure as soon as possible, and they will then be released from further attendance.

7. The subjects of the further examination and the maximum number of marks obtainable for each subject will be as follows:—

	Marks.
(1.) Mathematics,—viz., algebra, up to and including quadratic equations: the theory and use of logarithms; geometry; plane trigonometry; and mensuration - -	
(2.) English composition, tested by the power of writing an essay, letter, or précis; English literature, limited to specified authors; and English history, limited to certain fixed periods; the authors and periods being notified beforehand - - - - -	3,000
(3.) Latin - - - - - - -	3,000
(4.) Greek - - - - - - -	2,000
(5.) French; the examination to be partly colloquial - -	2,000
(6.) German; the examination to be partly colloquial -	2,000
*(7.) Experimental sciences,—viz., (*a*) chemistry and heat; or (*b*) electricity and magnetism - - - -	2,000
(8.) General and physical geography, and geology - -	2,000
(9.) Drawing (freehand) - - - - -	1,000

Of these nine subjects candidates will not be allowed to take up more than four nor less than two, exclusive of drawing.

8. In order to secure a proper proficiency in all the subjects taken up by a candidate, a certain number will be deducted from the marks gained by the candidate in each subject.

9. To pass this examination, a candidate must obtain, in the subjects which he takes up, such an aggregate total of marks as may, after the deduction above-mentioned, indicate in the judgment of the Civil Service Commissioners a competent amount of general proficiency.

10. Lieutenants of Militia recommended under paragraph 1, who are within the limits of age prescribed in paragraph 2, will be examined by the Civil Service Commissioners (paragraph 2 (*b*)) in October of each year. Notification of such examination will be made by the Military Secretary.

11. Candidates who fail at this examination will be allowed two other trials at the next ensuing examinations for admission to the Royal Military College,—viz., in the months of December and July.

12. A Militia candidate will not be required to qualify before the Civil Service Commission if he can produce a certificate from the proper authority that he has taken his degree in Arts, or has passed the examination specified below, at one of the following universities, viz.:—

Oxford: "moderations."
Cambridge: "the previous examination."

---

* Subjects (*a*) and (*b*) are alternative; a candidate will not be allowed to take up both.

Dublin: "the final examination of the senior freshman year."
Durham: "the first year's examination."
Queen's University, Ireland: "the first university examination in Arts or in engineering."
Scotch universities: "the examination for candidates for the Army."
London University: the "first examination" for the degrees of B.A., LL.B., B.Sc., or M.B.

ROYAL MILITARY COLLEGE, AND ROYAL MARINE LIGHT INFANTRY. July 1878.

13. All candidates will be examined by a medical board as to their physical fitness in every respect for Her Majesty's Service.

Extracts from Regulations respecting Examinations for First Appointments to the Royal Marines. [*Admiralty, 14th May* 1877.]

REGULATIONS FOR ADMISSION, &c.

1. Admission to the Royal Marine Light Infantry will be offered to the successful candidates in order of merit (according to the number of vacancies) at the open competitive examinations for admission to the Royal Military College at Sandhurst.

The examinations will be conducted by the Civil Service Commissioners, and will take place twice a year, in the months of July and December.

Candidates who have received permission from the Horse Guards to attend the examination, and who are desirous of obtaining an appointment in the Royal Marine Light Infantry, should send in their names to the Secretary to the Admiralty, to whom all inquiries on the subject should be addressed.

AGE, &c.

2. The limits of age for candidates for admission by competition will be from 17 to 20; for students of the universities, who shall have passed the interim examination, from 17 to 21; for graduates of the universities who shall have passed the examination for the degree of B.A. or M.A., from 17 to 22; and for lieutenants from the Militia, who are eligible for commissions in the army as lieutenants, and are recommended by the Horse Guards, from 19 to 22. They must be 5 ft. 5 in. in height.

3. Candidates must be within the prescribed limits of age on the following dates:—

Candidates for admission by competition - -	On the 1st of January next following the winter examination, and on the 1st of July for the midsummer examination.
Lieutenants from the Militia	On the 1st of May of the year in which they are recommended for a commission.

4. The successful candidates will be appointed lieutenants in the Royal Marine Light Infantry, and will be posted on the list of their corps in the order in which they passed their examination. They will join their respective divisions at once, and be instructed in their drill and military duties for service ashore and afloat. They will also undergo a course of garrison or military instruction.

ROYAL MILITARY COLLEGE, AND ROYAL MARINE LIGHT INFANTRY. July 1878.

TIME TABLE.

The Subjects printed in Italics are obligatory.

Place.	Time.	Subject of Examination.
The London University, Burlington-Gardens.	Tuesday, 2nd July.	
	10 a.m. to 1 p.m.	*Arithmetic and English Dictation.* (1.)
	2 p.m. to 4.30 p.m.	*Modern Language and English Dictation.* (2.)
	Wednesday, 3rd July.	
	10 a.m. to 12.30 p.m.	*Geometrical Drawing.*
	1.30 p.m. to 5.15 p.m.	*Euclid and Geography.*
	Thursday, 4th July.	MEDICAL EXAMINATION.
	Friday, 5th July.	
	10 a.m. to 12.30 p.m.	Geometrical Drawing.*
	2 p.m. to 5 p.m.	English Composition.
	Saturday, 6th July.	
	10 a.m. to 1 p.m.	Mathematics. (1.)
	2 p.m. to 5 p.m.	Mathematics. (2.)
	Monday, 8th July.	
	10 a.m. to 1 p.m.	English Literature. (1.)
	2 p.m. to 5 p.m.	English Literature. (2.)
	Tuesday, 9th July.	
	10 a.m. to 1 p.m.	Latin (Prose).
	2 p.m. to 5 p.m.	Latin (Verse).
	Wednesday, 10th July.	
	10 a.m. to 1 p.m.	English History.
	2 p.m. to 5 p.m.	†French.
	Thursday, 11th July.	
	10 a.m. to 1 p.m.	Freehand Drawing.
	2 p.m. to 5 p.m.	†Chemistry and Heat. †Electricity and Magnetism.
	Friday, 12th July.	
	10 a.m. to 1 p.m.	Practical Chemistry.
	2 p.m. to 5 p.m.	
The South Exhibition Galleries, South Kensington. (Entrance in Exhibition Road.)	Saturday, 13th July.	
	10 a.m. to 1 p.m.	†German.
	2 p.m. to 5 p.m.	†Geology and Geography.
	Monday, 15th July.	
	10 a.m. to 1 p.m.	Greek (Prose).
	2 p.m. to 5 p.m.	Greek (Verse).

* This paper can be taken by those candidates only who have passed their preliminary examination on a previous occasion.

† In these subjects there will be a vivâ voce examination, the time and place of which will be notified to the candidates who take them up.

ROYAL MILITARY COLLEGE, AND ROYAL MARINE LIGHT INFANTRY. July 1878.

NOTICES.

1. On the first day of the examination each candidate will be required to state on a form which will be placed before him his address during the examination. If this address is changed, notice of every change should be sent to "The Secretary, Civil Service Commission, Westminster," until the candidate has received the announcement of the result of the examination.

   N.B.—To candidates who fail to pass in any of the obligatory subjects, notice of the fact will be communicated as soon as possible. Such candidates will not proceed further with the examination, and no marks will be assigned to their papers.
2. During the whole of the examination the candidates will be designated by numbers. On the first day a number will be assigned to each candidate, which will remain the same to the close of the examination; and he must affix his number (not his name) to every paper which he sends in.
3. The examination will in each case begin at the time named in the foregoing list, but the door of the examination room will be kept open for half an hour afterwards, in order that candidates may not be excluded owing to accidental delays. Candidates arriving after the expiration of that half hour will not be admitted.
4. Candidates will be required, before proceeding to the examination rooms, to leave, in a room provided for the purpose, their hats, overcoats, umbrellas, and any books or papers which they may have brought with them.
5. No candidate will be allowed to quit the examination room on any day until the expiration of half an hour from the time fixed for the commencemcnt of the examination.
6. No candidate who has left the examination room during the hours assigned to paper work will be permitted to return to the paper which he has quitted.
7. Candidates wishing for explanation of the meaning of any of the questions before them may apply to the superintendent of the examination room. With this exception, perfect silence is to be preserved in the examination room; and any candidate guilty of disorderly or improper conduct in or about the room will be liable to be excluded from the examination.
8. Any candidate detected in the use of a book or manuscript brought with him for his assistance, or in copying from the papers of any other candidate, or in giving or receiving assistance of any description, will be regarded as disqualified, and his name will be removed from the list.
9. For the examination in geometrical drawing nothing will be required except mathematical instruments, which candidates are expected to bring with them.

   Candidates who take up freehand drawing must bring their own drawing pencils and brushes; but drawing paper, drawing boards, colours, Indian ink, and palettes will be supplied to them by the Commissioners.
10. Candidates who proceed to the "further examination" will be informed by letter from this office of their place in it. The table of marks will be published about a fortnight after the result is declared, with a reprint of the examination papers, and may then be obtained through any bookseller.

Civil Service Commission,
Cannon Row, S.W.,
April 1878.

TABLE showing the MARKS obtained by the CANDIDATES for ADMISSION to the ROYAL MILITARY COLLEGE, and for FIRST APPOINTMENTS in the ROYAL MARINE LIGHT INFANTRY, who were examined under the directions of the Civil Service Commissioners, on the 2nd July 1878, and subsequent days.

*** A deduction of 250 has been made from the marks obtained in each subject except Geometrical Drawing.

SUCCESSFUL CANDIDATES (ORDINARY AND WEST INDIA).

Note.—115 Cadetships were offered for competition, 5 being reserved for West India Candidates. These Candidates are distinguished by the letters W.I. after their names.

Number in Order of Merit.	Number in Examination.	Name.	Mathematics.	English Composition, Literature, and History.	Latin.	Greek.	French.	German.	Experimental Sciences.	Geography and Geology.	Drawing.		Total.
											Freehand.	Geometrical.	
		Maxima	3,000	3,000	3,000	2,000	2,000	2,000	2,000	2,000	1,000	500	
1	213	[illegible]	—	1,782	1,982	1,307	950	—	—	—	0	186	6,187
2	405	hn	1,715	1,629	—	—	1,006	776	—	—	0	143	5,408
3	339		760	—	1,868	—	1,551	1,105	—	—	—	133	5,397
4	669	[W.I.]	2,110	1,061	1,280	722	—	—	—	—	0	148	5,321
5	463		1,375	—	1,529	—	1,125	1,046	—	—	52	180	5,307
6	203	k	1,860	968	1,478	—	686	—	—	—	64	156	5,234
7	356		—	1,512	1,539	—	1,050	1,235	—	—	—	84	5,220
8	411		1,845	1,569	—	—	264	—	1,263	—	—	257	5,197
9	443		1,505	1,464	694	—	1,305	—	—	—	—	196	5,166
10	41		670	1,948	1,485	—	1,229	—	—	—	0	164	4,996
11	203	Gamble; Richard Narrien	—	1,504	1,146	—	1,230	866	—	—	—	100	4,896
12	165	Ferguson; Ronald Crawfurd Munro	—	1,780	—	—	1,020	776	—	1,115	0	156	4,847
13	323		1,575	1,232	—	—	665	1,010	—	—	—	177	4,719
14	361	Edmond John	1,060	1,420	—	—	209	848	—	—	185	237	4,659
15	325		1,575	1,902	—	—	535	—	420	—	—	205	4,637
16	539	Balfour	775	1,443	—	—	895	1,207	—	—	—	204	4,624
17	295		—	1,679	1,664	708	465	—	—	—	0	57	4,593
18	246		1,335	1,672	626	—	740	—	—	—	0	208	4,581
19	555		1,160	1,596	979	—	627	—	—	—	0	207	4,569
20	436		490	1,655	902	—	1,195	—	—	—	0	220	4,562
21	193	[illegible]	1,650	1,420	—	—	430	—	845	—	0	177	4,523
22	70	ert Lithbridge	255	1,408	1,725	575	—	—	—	—	366	183	4,507

TABLE showing MARKS obtained by CANDIDATES for ADMISSION to the ROYAL MILITARY COLLEGE, and for FIRST APPOINTMENTS in the ROYAL MARINE LIGHT INFANTRY.—SUCCESSFUL CANDIDATES—*cont.*

Number in Order of Merit.	Number in Examination.	Name.	Mathematics.	English Composition, Literature, and History.	Latin.	Greek.	French.	German.	Experimental Sciences.	Geography and Geology.	Drawing. Freehand.	Drawing. Geometrical.	Total.
		Maxima	3,000	3,000	3,000	2,000	2,000	2,000	2,000	2,000	1,000	300	
23	169	Fleming; John Murchison	—	1,810	1,178	476	596	—	—	—	270	132	4,462
24	351		1,130	1,010	1,390	—	810	—	—	—	—	116	4,456
25	48		750	1,455	960	—	765	—	—	—	310	167	4,407
26	105		880	1,494	—	—	942	—	—	870	—	187	4,373
27	308		1,600	1,479	473	—	500	—	—	—	0	240	4,352
28	440		1,125	1,023	695	—	—	—	1,122	—	170	198	4,333
29	62		1,190	971	—	—	610	—	—	1,003	315	241	4,330
30	340		520	1,545	1,311	—	693	—	—	—	87	173	4,329
31	114	ose	780	1,027	—	—	—	—	1,166	1,067	105	227	4,314
32	52		1,285	1,336	—	—	595	839	—	—	53	203	4,311
33	34	R	1,510	1,225	388	—	1,073	—	—	—	—	113	4,309
34	293	ackenzie	—	1,020	1,293	796	1,010	—	—	—	0	169	4,288
35	331		1,245	1,108	729	—	1,044	—	—	—	—	145	4,271
36	359		1,045	590	—	—	1,280	1,145	—	—	—	227	4,267
37	360		390	1,635	—	—	749	1,226	—	—	255	—	4,255
38	210		1,130	1,507	—	—	410	—	—	975	0	207	4,229
39	236		1,170	1,509	—	—	704	—	—	623	—	203	4,208
40	683		1,095	1,542	—	—	—	506	—	860	—	193	4,196
41	399		1,415	1,489	—	—	0	—	787	—	273	225	4,189
42	171		—	1,375	—	—	1,438	1,181	—	160	—	—	4,154
43	519		1,385	1,055	—	—	1,050	—	—	235	242	169	4,136
44	45		1,370	1,462	—	—	539	506	—	—	—	163	4,130
	446		1,005	1,370	—	—	895	515	—	—	120	225	4,130
46	208		1,440	1,195	—	—	343	—	—	865	53	222	4,120
47	31		995	1,513	578	—	821	—	—	—	—	209	4,116
48	152		—	1,349	1,316	462	757	—	—	—	—	185	4,069
49	29		985	948	1,216	—	755	—	—	—	—	153	4,057
50	449		460	1,366	1,630	521	—	—	—	—	8	106	4,051

ROYAL MILITARY COLLEGE, AND ROYAL MARINE LIGHT INFANTRY.
July 1878.

ROYAL MILITARY COLLEGE, AND ROYAL MARINE LIGHT INFANTRY, July 1878.

TABLE showing MARKS obtained by CANDIDATES for ADMISSION to the ROYAL MILITARY COLLEGE, and for FIRST APPOINTMENTS in the ROYAL MARINE LIGHT INFANTRY.—SUCCESSFUL CANDIDATES—*cont.*

Number in Order of Merit.	Number in Examination.	Name.	Mathematics.	English Composition, Literature, and History.	Latin.	Greek.	French.	German.	Experimental Sciences.	Geography and Geology.	Drawing. Freehand.	Drawing. Geometrical.	Total.
		Maxima	3,000	3,000	3,000	2,000	2,000	2,000	2,000	2,000	1,000	300	
51	557		1,185	1,239	1,083	387	—	—	—	—	0	151	4,045
52	451		1,025	1,631	544	—	655	—	—	—	—	180	4,035
53	311		975	—	1,411	—	895	551	—	—	—	171	4,003
54	350		1,795	886	210	—	—	—	—	929	—	180	4,000
55	468		265	1,546	920	—	910	—	—	—	140	174	3,955
56	453		450	1,885	887	—	530	—	—	—	0	199	3,951
57	533		1,490	—	—	—	762	650	654	—	170	216	3,942
58	452		950	1,305	818	—	660	—	—	—	—	208	3,941
59	437		1,140	658	—	—	965	1,010	—	—	0	153	3,926
60	371		1,500	703	—	—	—	—	440	1,030	0	239	3,912
61	511		750	1,222	—	—	937	767	—	—	0	194	3,870
62	435		—	1,044	—	—	925	1,159	—	629	0	118	3,866
63	23		605	1,406	—	—	1,575	—	89	—	0	140	3,815
64	89		915	1,018	—	—	949	—	687	—	—	217	3,786
65	313		510	1,227	—	—	950	902	—	—	—	182	3,771
66	113		—	1,174	1,330	720	437	—	—	—	—	100	3,761
67	695		—	1,318	—	—	638	—	—	960	640	177	3,752
68	191		690	1,263	768	—	850	—	—	—	0	157	3,728
69	174		1,245	1,167	—	—	1,160	—	0	—	—	150	3,722
70	490		—	1,038	590	—	523	—	—	1,083	254	206	3,694
71	109	Cooper; Lewis Ernest	845	1,632	841	—	255	—	—	—	0	102	3,675
72	409	Perkins; Norman Chichester	—	1,519	—	—	695	317	942	—	—	197	3,670
73	154	Egerton; Granville George Algernon	—	1,519	0	—	675	1,316	—	—	—	152	3,662
74	66	Berry; Edward	1,070	1,075	—	—	519	803	—	—	0	183	3,649
75	514	Thackwell; W H	1,035	853	710	—	905	—	—	—	0	140	3,643
76	344	Marshall; H S	—	1,537	937	204	715	—	—	—	3	239	3,635
77	553	Weller; George Herbert	1,065	1,379	496	—	499	—	—	—	0	165	3,604
78	420	Plumer; Thomas Hall	1,075	591	1,356	—	355	—	—	—	0	209	3,586

TABLE showing MARKS obtained by CANDIDATES for ADMISSION to the ROYAL MILITARY COLLEGE, and for FIRST APPOINTMENTS in the ROYAL MARINE LIGHT INFANTRY.—SUCCESSFUL CANDIDATES—*cont.*

Number in Order of Merit.	Number in Examination.	Name.	Mathematics.	English Composition, Literature, and History.	Latin.	Greek.	French.	German.	Experimental Sciences.	Geography and Geology.	Drawing. Freehand.	Drawing. Geometrical.	Total.
		Maxima	3,000	3,000	3,000	2,000	2,000	2,000	2,000	2,000	1,000	300	
79	23	Browning; Arthur Robertson	—	1,309	754	286	1,025	—	—	—	—	120	3,584
80	60	Brabason; William Beaufort	—	1,584	1,487	—	360	—	—	—	—	148	3,579
81	480	Kincaid-Smith; Ronald	1,170	1,087	942	173	-	—	—	—	—	206	3,578
82	314	Loftus; Montagu Egerton	—	1,084	0	—	1,120	1,226	—	—	0	140	3,570
83	40	Bishop; Charles Willoughby	—	1,230	—	—	870	641	—	595	—	226	3,562
84	8		1,105	1,524	—	—	120	—	613	—	—	194	3,556
85	387		1,785	740	—	—	278	560	—	—	0	190	3,553
86	317	Bainbridge	—	1,564	1,061	139	670	—	—	—	—	110	3,544
87	688	[W.I.]	615	1,296	419	—	965	—	—	—	0	249	3,534
88	216		340	1,201	—	—	825	992	—	—	0	174	3,532
89	383		1,125	753	—	—	795	677	—	—	—	173	3,523
90	507	odd	1,335	901	—	—	791	—	0	—	244	225	3,496
91	1	Vans-Agnew; John	220	1,581	798	747	—	—	—	—	—	135	3,481
92	242	Hunt; Cecil Henry	570	—	1,287	638	854	—	—	—	—	125	3,474
	336	McClintock; William Kerr	300	1,394	719	—	905	—	—	—	0	156	3,474
94	50		1,215	—	954	680	415	—	—	—	—	206	3,470
95	95		—	1,322	—	—	775	236	—	970	0	138	3,441
96	261		970	1,074	—	—	484	—	724	—	0	180	3,432
97	206		1,290	1,224	—	—	470	128	—	—	100	207	3,419
98	2		925	1,453	179	—	—	—	599	—	30	199	3,385
99	332		0	1,113	—	—	898	1,244	—	—	—	128	3,383
100	247		—	759	1,189	487	940	—	—	—	—	—	3,375
101	534		380	1,318	805	—	655	—	—	—	69	147	3,374
102	416		750	1,056	622	—	807	—	—	—	—	134	3,369
103	456	nes	—	1,222	1,282	274	425	—	—	—	—	151	3,354
104	121		—	568	319	—	1,265	1,073	—	—	—	121	3,346
105	324		1,075	1,249	221	—	565	—	—	—	0	185	3,295
	529		490	1,150	910	—	595	—	—	—	—	150	3,295

ROYAL MILITARY COLLEGE, AND ROYAL MARINE LIGHT INFANTRY, July 1878.

TABLE showing MARKS obtained by CANDIDATES for ADMISSION to the ROYAL MILITARY COLLEGE and for FIRST APPOINTMENTS in the ROYAL MARINE LIGHT INFANTRY.—SUCCESSFUL CANDIDATES—*cont.*

Number in Order of Merit.	Number in Examination.	Name.	Mathematics.	English Composition, Literature, and History.	Latin.	Greek.	French.	German.	Experimental Sciences.	Geography and Geology.	Drawing.		Total.
											Freehand.	Geometrical.	
		Maxima	3,000	3,000	3,000	2,000	2,000	2,000	2,000	2,000	1,000	300	
107	162	Eagar; Frank Whitworth	—	1,275	—	—	519	1,226	—	—	—	158	3,278
108	342	Mayne; Jasper Graham	1,460	677	—	—	640	362	—	—	0	227	3,366
109	287	Kettlewell; Edward Alexander	1,365	—	699	—	489	686	—	—	0	126	3,365
110	221	Haynes; A.	610	887	—	—	479	329	—	—	—	143	3,248
111	156	Fuller; Abraham	—	1,539	158	—	1,140	—	—	—	260	139	3,236
112	9	Alham; William Gore	—	829	1,335	707	—	—	253	—	—	102	3,226
113	235	Hibbert; Robert Fiennes	—	1,013	772	418	—	—	—	776	81	158	3,219
	401	Oldfield; J R H	1,220	790	—	—	348	—	—	710	0	130	3,218
131	691	Lynaght; Arthur Nairn [W.I.]	155	1,002	780	—	910	—	—	—	8	139	3,044

UNIVERSITY CANDIDATES (SUCCESSFUL).

Note.—12 Cadetships were offered for competition among University Candidates.

1	647	Newmarch; L S	1,505	1,852	1,634	1,176	—	—	—	—	—	174	6,341
2	644	liam	1,520	—	1,819	—	1,295	983	—	—	395	231	6,243
3	639		1,115	—	1,951	412	1,420	—	—	—	420	172	5,490
4	654	awrence	1,225	1,416	—	—	763	—	836	—	0	183	4,425
5	648	l	585	1,321	1,227	967	—	—	—	—	—	126	4,216
6	663		890	987	1,140	—	845	—	—	—	0	186	4,048
7	643		—	1,275	789	—	830	—	754	—	170	180	3,998
8	646	Smith; James Robert Dunlop	330	1,424	1,084	546	—	—	—	—	0	125	3,509
9	650	Roche; John Edward Fitzmaurice Hughes	—	895	1,213	595	540	—	—	—	96	158	3,478
10	649		275	—	1,461	806	650	—	—	—	—	93	3,285
11	651		—	1,096	976	39	1,015	—	—	—	0	131	3,257
12	658		—	927	716	53	900	—	—	—	—	114	2,710

TABLE showing MARKS obtained by CANDIDATES for ADMISSION to the ROYAL MILITARY COLLEGE.—SUCCESSFUL CANDIDATES—*cont.*

Number in Order of Merit.	Number in Examination.	Name.	Mathematics.	English Composition, Literature, and History.	Latin.	Greek.	French.	German.	Experimental Sciences.	Geography and Geology.	Drawing.		Total.
											Freehand.	Geometrical.	
QUEEN'S CADETS. QUALIFIED.†													
		Maxima	3,000	3,000	3,000	2,000	2,000	2,000	2,000	2,000	1,000	300	
*	627	Cowper-Coles; Rogers Lyons	270	104	—	—	—	650	—	—	8	205	1,232
	628	Home; Thomas Herrick	115	1,164	—	—	520	—	—	465	0	104	2,368
	630	Lloyd; William Reade	—	647	—	—	123	—	—	520	0	161	1,451
	632	McNair; Charles Henry Robert	760	667	—	—	50	—	—	—	115	251	1,843
INDIAN CADETS. QUALIFIED.‡													
*	606	Beale; Anthony	280	1,156	—	—	1,446	1,505	—	—	0	220	4,607
	607	Carter; Edward James	1,465	1,023	—	—	519	—	—	793	350	213	4,363
	612	Couper; Victor Arthur	—	1,206	0	—	530	—	—	—	—	161	1,897
	610	Dobbie; William Hugh	550	1,149	—	—	—	—	—	—	0	115	1,814
	614	Dennys; William Annesley Burton	445	483	—	—	236	—	—	—	367	193	1,724
	618	Edwards; Charles Grant F.	40	926	—	—	393	—	—	—	69	162	1,590
	609	Smallpage; Francis Henry	—	308	291	—	420	—	—	—	—	109	1,128
HONORARY QUEEN'S INDIAN CADETS. QUALIFIED.§													
*	474	Simpson; Francis Blake	—	678	162	—	386	—	—	603	—	113	1,942
	625	Stewart; D W	20	832	124	—	613	—	—	—	—	155	1,734
PAGE OF HONOUR. QUALIFIED.													
*	633	Drummond; Laurence George	0	870	—	—	590	—	—	588	—	146	2,194

* These candidates are arranged in alphabetical order.
‡ Nine Indian cadets failed either in the preliminary or in the qualifying examination.
† Five Queen's cadets failed in the preliminary examination.
§ Two Honorary Queen's Indian cadets failed in the qualifying examination.

ROYAL MILITARY COLLEGE, AND ROYAL MARINE LIGHT INFANTRY. July 1878.

ROYAL MILITARY COLLEGE, AND ROYAL MARINE LIGHT INFANTRY. July 1878.

TABLE OF MARKS—*continued.*

UNSUCCESSFUL CANDIDATES.

Number in Order of Merit.	Number in Examination.	—	Mathematics.	English Composition, Literature, and History.	Latin.	Greek.	French.	German.	Experimental Sciences.	Geography and Geology.	Drawing. Freehand.	Drawing. Geometrical.	Total.
		Maxima -	3,000	3,000	3,000	2,000	2,000	2,000	2,000	2,000	1,000	300	
115	549	- - -	260	1,178	—	—	848	758	—	—	—	158	3,202
116	249	- - -	—	997	1,159	815	127	—	—	—	—	102	3,200
117	423	- - -	860	1,275	349	—	425	—	—	—	36	252	3,197
118	426	- - -	910	866	—	—	625	569	—	—	—	225	3,195
119	353	- - -	1,060	665	629	—	655	—	—	—	0	183	3,192
120	37	- - -	310	1,496	—	—	215	—	—	833	125	193	3,172
121	82	- - -	—	1,452	838	505	—	—	—	284	—	90	3,169
122	3	- - -	1,055	1,137	—	—	447	—	—	339	0	174	3,152
123	506	- - -	265	1,067	720	—	545	—	—	—	376	169	3,142
124	397	- - -	1,035	876	—	—	430	—	599	—	0	197	3,137
125	179	- - -	780	890	—	—	677	623	—	—	0	165	3,135
126	470	- - -	740	1,018	—	—	335	—	—	810	40	151	3,094
127	388	- - -	—	695	841	133	—	1,262	—	—	—	159	3,090
128	243	- - -	945	374	—	—	495	1,100	—	—	0	167	3,081
129	550	- - -	1,310	460	—	—	693	—	—	451	0	158	3,072
130	21	- - -	115	135	—	—	1,167	1,451	—	—	60	131	3,059
*132	448	- - -	—	969	1,252	—	675	—	—	—	42	97	3,035
133	479	- - -	90	1,341	1,130	281	—	—	—	—	—	181	3,023
134	158	- - -	—	668	1,126	—	1,180	—	0	—	42	—	3,016
135	513	- - -	210	1,327	—	—	791	524	—	—	—	163	3,015
136	232	- - -	260	254	—	—	1,145	1,181	—	—	0	172	3,012
	302	- - -	885	893	—	—	1,070	0	—	—	30	134	3,012
138	419	- - -	1,230	587	—	—	560	434	—	—	0	194	3,005
139	562	- - -	1,000	1,211	—	—	275	—	0	—	285	217	2,988
140	310	- - -	290	1,231	830	—	425	—	—	—	—	201	2,977
141	38	- - -	800	566	890	—	481	—	—	—	70	167	2,974
142	129	- - -	745	507	—	—	554	—	—	807	138	219	2,970
143	155	- - -	—	603	1,131	455	625	—	—	—	—	154	2,968
144	689	- - -	—	1,044	—	—	970	—	—	642	190	104	2,950
145	406	- - -	245	1,055	—	—	265	1,181	—	—	—	168	2,914
146	367	- - -	—	408	—	—	880	1,078	—	205	135	173	2,879
147	32	- - -	185	526	—	—	1,020	1,010	—	—	—	135	2,876
148	335	- - -	915	952	—	—	480	344	—	—	0	162	2,853
149	233	- - -	—	992	162	—	815	803	—	—	—	55	2,827
150	464	- - -	—	723	151	—	865	965	—	—	14	106	2,824
151	87	- - -	—	1,301	494	—	760	—	75	—	—	187	2,817
152	159	- - -	1,095	995	—	—	525	—	—	—	—	200	2,815
153	137	- - -	765	793	612	—	420	—	—	—	0	181	2,771
154	355	- - -	400	635	—	—	715	866	—	—	—	153	2,769
155	398	- - -	835	1,421	—	—	55	—	262	—	—	178	2,751
156	265	- - -	0	1,035	—	—	795	890	—	—	—	78	2,738
157	552	- - -	365	—	—	—	855	—	550	768	0	199	2,737
158	345	- - -	700	908	—	—	495	529	—	—	—	101	2,733
159	101	- - -	—	586	908	719	430	—	—	—	0	89	2,732
	239	- - -	425	1,352	—	—	810	—	0	—	—	145	2,732
161	51	- - -	70	1,197	—	—	435	—	—	857	0	172	2,731
162	326	- - -	350	801	486	—	983	—	—	—	0	104	2,724
163	338	- - -	535	1,158	—	—	690	227	—	—	—	113	2,723
164	321	- - -	475	866	—	—	486	—	—	674	0	199	2,700
165	491	- - -	370	264	—	—	580	1,199	—	—	102	182	2,697
166	161	- - -	—	545	916	11	1,025	—	—	—	—	190	2,687
167	424	- - -	505	592	777	—	—	—	644	—	—	166	2,684
168	85	- - -	345	481	1,125	551	—	—	—	—	0	168	2,670
169	366	- - -	515	863	539	—	550	—	—	—	0	201	2,668
	418	- - -	835	627	—	—	363	524	—	—	113	206	2,668
171	292	- - -	1,125	—	—	—	1,005	317	—	—	—	199	2,646
172	194	- - -	—	1,035	0	—	580	875	—	—	0	143	2,633
173	524	- - -	120	950	356	—	995	—	—	—	0	183	2,604
174	690	- - -	160	1,529	0	—	749	—	—	—	0	157	2,595
175	181	- - -	685	1,376	0	—	385	—	—	—	—	148	2,594
176	505	- - -	5	1,132	—	—	420	—	—	912	—	117	2,586
177	27	- - -	945	914	—	—	558	—	—	—	0	159	2,576
178	164	- - -	1,330	463	—	—	0	578	—	—	—	177	2,568
179	148	- - -	520	679	—	—	203	—	—	962	—	200	2,564
180	146	- - -	1,435	610	171	—	135	—	—	—	0	196	2,547
181	369	- - -	945	716	49	—	625	—	—	—	—	211	2,546
182	248	- - -	250	1,224	564	—	330	—	—	—	0	171	2,539
183	266	- - -	385	454	158	—	—	1,379	—	—	0	159	2,535
184	259	- - -	95	966	—	—	870	362	—	—	106	133	2,532
185	177	- - -	—	1,035	11	—	775	—	—	545	—	153	2,519

* No. 131 in order of merit is in the Successful List as a candidate for a West India Regiment.

TABLE OF MARKS—UNSUCCESSFUL CANDIDATES—*continued.*

ROYAL MILITARY COLLEGE, AND ROYAL MARINE LIGHT INFANTRY. July 1878.

Number in Order of Merit.	Number in Examination.	—	Mathematics.	English Composition, Literature, and History.	Latin.	Greek.	French.	German.	Experimental Sciences.	Geography and Geology.	Drawing.		Total.
											Freehand.	Geometrical.	
		Maxima -	3,000	3,000	3,000	2,000	2,000	2,000	2,000	2,000	1,000	300	
186	502	- - -	0	905	740	—	760	—	—	—	0	102	2,507
187	167	- - -	745	781	184	—	710	—	—	—	75	—	2,495
188	469	- - -	425	626	—	—	530	—	—	705	58	131	2,475
189	56	- - -	130	694	565	—	742	—	—	—	175	153	2,459
190	489	- - -	680	1,060	225	—	150	—	—	—	158	182	2,455
191	142	- - -	0	646	—	—	641	1,073	—	—	—	71	2,431
192	493	- - -	—	662	1,367	—	260	—	—	—	—	140	2,429
193	230	- - -	1,000	573	—	—	225	—	360	—	0	270	2,428
	312	- - -	—	671	1,175	193	277	—	—	—	—	112	2,428
	323	- - -	740	734	—	—	445	299	—	—	0	210	2,428
196	503	- - -	700	628	—	—	657	—	292	—	0	139	2,416
197	264	- - -	—	301	—	—	760	1,055	—	0	135	129	2,380
198	173	- - -	—	414	170	—	620	1,037	—	—	—	131	2,372
199	461	- - -	—	1,315	115	—	285	—	406	—	0	221	2,342
200	53	- - -	—	648	726	416	455	—	—	—	—	90	2,335
201	341	- - -	705	874	517	—	18	—	—	—	75	133	2,322
202	475	- - -	580	897	547	—	195	—	—	—	0	101	2,320
203	166	- - -	500	1,037	—	—	380	—	—	—	200	196	2,313
204	545	- - -	1,010	518	—	—	371	191	—	—	0	223	2,313
205	391	- - -	130	792	—	—	625	677	—	—	—	83	2,307
206	334	- - -	890	1,050	113	—	15	—	—	—	8	221	2,297
207	99	- - -	385	943	435	—	373	—	—	—	0	154	2,290
208	556	- - -	475	692	528	—	408	—	—	—	0	179	2,282
209	58	- - -	735	827	547	—	0	—	—	—	—	163	2,272
	363	- - -	410	1,130	125	—	442	—	—	—	41	124	2,272
211	220	- - -	480	1,073	—	—	0	—	—	549	22	145	2,269
212	535	- - -	—	825	119	—	845	371	—	—	—	108	2,268
213	482	- - -	345	1,306	116	—	320	—	—	—	—	179	2,266
214	392	- - -	660	386	323	—	—	551	—	—	110	230	2,260
215	276	- - -	340	657	555	—	—	587	—	—	—	92	2,231
216	290	- - -	660	791	—	—	280	371	—	—	—	118	2,220
217	394	- - -	—	512	256	—	880	506	—	—	63	—	2,217
218	35	- - -	550	815	—	—	338	—	329	—	—	182	2,214
219	488	- - -	775	731	0	—	560	—	—	—	0	144	2,210
220	694	- - -	—	1,324	—	—	705	—	—	—	—	171	2,200
221	224	- - -	460	867	—	—	252	371	—	—	138	90	2,178
222	432	- - -	—	991	98	—	146	—	—	768	0	139	2,142
223	180	- - -	1,160	559	—	—	210	47	—	—	0	163	2,139
224	488	- - -	500	1,023	—	—	515	—	—	0	—	97	2,135
225	417	- - -	865	492	—	—	352	254	—	—	0	156	2,119
226	128	- - -	225	1,150	346	—	210	—	—	—	0	147	2,078
227	315	- - -	—	836	609	0	508	—	—	—	—	92	2,045
228	309	- - -	0	774	—	—	20	—	—	704	372	172	2,042
229	402	- - -	170	988	—	—	660	—	125	—	0	97	2,040
230	351	- - -	385	634	356	—	560	—	—	—	—	104	2,039
231	413	- - -	—	589	517	266	525	—	—	—	0	141	2,038
232	682	- - -	—	—	—	—	1,065	812	—	—	—	136	2,013
233	573	- - -	—	936	655	—	278	—	—	22	0	120	2,011
234	133	- - -	235	779	—	—	176	—	—	580	—	229	1,999
235	170	- - -	370	499	—	—	338	—	—	615	65	119	1,996
236	228	- - -	920	232	—	—	112	—	466	—	58	204	1,992
237	481	- - -	375	440	347	—	675	—	—	—	0	152	1,989
238	305	- - -	—	581	888	269	—	—	0	—	—	224	1,962
239	255	- - -	—	1,404	215	—	245	—	—	—	—	72	1,936
240	460	- - -	415	382	844	—	100	—	—	—	—	192	1,933
241	458	- - -	—	1,244	—	—	575	—	—	—	0	111	1,930
	487	- - -	695	670	—	—	395	—	0	—	0	170	1,930
243	385	- - -	0	448	—	—	535	776	—	—	—	149	1,908
244	110	- - -	60	1,064	—	—	580	—	—	—	0	191	1,895
245	510	- - -	600	823	339	—	0	—	—	—	0	128	1,890
246	442	- - -	0	969	—	—	295	—	—	478	—	144	1,886
247	518	- - -	265	851	414	—	40	—	—	—	146	159	1,875
248	465	- - -	400	852	—	—	330	119	—	—	0	169	1,870
249	67	- - -	—	265	57	—	800	641	—	—	—	106	1,869
250	382	- - -	270	220	511	—	740	—	—	—	—	124	1,865
251	172	- - -	—	491	141	—	540	587	—	—	—	103	1,862
	386	- - -	415	583	0	—	745	—	—	—	0	119	1,862
253	10	- - -	315	95	320	—	1,024	—	—	—	—	103	1,857
254	136	- - -	545	—	285	—	235	—	582	—	0	194	1,841
255	26	- - -	—	657	—	—	650	—	—	402	0	117	1,826
256	201	- - -	—	969	—	—	705	—	—	—	—	147	1,821
257	349	- - -	110	822	623	—	160	—	—	—	—	87	1,802
258	668	- - -	0	105	—	—	1,074	524	—	—	0	94	1,797

ROYAL MILITARY COLLEGE, AND ROYAL MARINE LIGHT INFANTRY. July 1878.

TABLE OF MARKS—UNSUCCESSFUL CANDIDATES—*continued.*

Number in Order of Merit.	Number in Examination.	—	Mathematics.	English Composition, Literature, and History.	Latin.	Greek.	French.	German.	Experimental Sciences.	Geography and Geology.	Drawing.		Total.
											Freehand.	Geometrical.	
		Maxima -	3,000	3,000	3,000	2,000	2,000	2,000	2,000	2,000	1,000	300	
259	444	- - -	90	221	—	—	235	1,109	—	—	—	135	1,790
260	375	- - -	—	413	693	—	560	—	—	—	—	92	1,758
261	508	- - -	455	966	—	—	155	—	—	—	—	179	1,755
262	515	- - -	210	412	400	—	—	578	—	—	—	154	1,754
263	117	- - -	—	913	55	—	290	371	—	—	0	123	1,752
264	189	- - -	0	479	—	—	1,154	0	—	—	0	117	1,750
265	547	- - -	355	38	—	—	1,220	—	—	—	0	107	1,720
266	124	- - -	—	838	—	—	—	758	—	—	—	121	1,717
	675	- - -	—	460	30	—	257	857	—	—	—	113	1,717
268	478	- - -	695	239	—	—	325	11	—	—	233	207	1,710
269	571	- - -	—	150	224	—	534	641	—	—	—	160	1,709
270	548	- - -	0	268	449	—	835	—	—	—	0	150	1,702
271	316	- - -	—	679	568	—	300	—	—	—	0	140	1,687
272	439	- - -	—	565	0	—	525	—	—	—	373	202	1,665
273	531	- - -	345	828	—	—	391	—	0	—	—	100	1,664
274	441	- - -	—	1,022	268	—	205	—	—	—	0	152	1,647
275	91	- - -	1,410	120	—	—	—	—	—	—	—	115	1,645
276	42	- - -	80	794	—	—	125	470	—	—	—	175	1,644
277	561	- - -	140	974	—	—	—	—	0	423	0	87	1,624
278	204	- - -	275	607	—	—	459	74	—	—	0	185	1,600
279	501	- - -	160	429	—	—	—	—	91	750	—	166	1,596
280	677	- - -	—	73	—	—	1,410	0	—	—	36	75	1,594
281	542	- - -	20	479	—	—	265	—	—	604	—	221	1,589
282	218	- - -	0	760	—	—	0	—	690	—	0	133	1,583
283	43	- - -	—	532	616	0	255	—	—	—	0	167	1,570
284	168	- - -	805	205	—	—	240	—	157	—	0	100	1,567
285	289	- - -	0	1,233	9	—	256	—	—	—	—	54	1,552
286	209	- - -	520	—	—	—	525	344	0	—	0	153	1,542
287	211	- - -	890	197	41	—	210	—	—	—	8	193	1,539
288	178	- - -	205	802	—	—	93	236	—	—	0	202	1,538
289	330	- - -	70	529	—	—	775	—	0	—	—	149	1,523
290	334	- - -	135	1,033	—	—	200	—	—	—	0	153	1,521
291	281	- - -	745	182	—	—	430	11	—	—	—	135	1,503
292	429	- - -	—	413	582	67	290	—	—	—	—	139	1,491
293	318	- - -	310	802	—	—	240	—	—	—	—	134	1,486
294	160	- - -	0	—	289	—	595	353	—	—	—	184	1,421
295	410	- - -	0	272	—	—	400	614	—	—	—	117	1,403
296	364	- - -	330	506	432	—	5	—	—	—	—	121	1,394
297	176	- - -	475	742	0	—	60	—	—	—	0	107	1,384
	455	- - -	160	684	371	—	25	—	—	—	0	144	1,384
299	273	- - -	—	749	—	—	475	—	—	0	0	159	1,374
300	306	- - -	390	666	—	—	20	0	—	—	50	234	1,360
301	389	- - -	410	779	—	—	—	—	—	—	—	156	1,345
302	462	- - -	220	1,009	—	—	0	—	0	—	0	97	1,326
303	35	- - -	—	155	581	—	415	—	—	—	—	170	1,321
304	245	- - -	25	517	0	—	618	—	—	—	—	143	1,303
305	254	- - -	150	639	—	—	342	—	—	—	—	150	1,281
306	390	- - -	470	—	—	—	295	—	—	210	140	161	1,276
	421	- - -	160	309	—	—	290	—	429	—	—	83	1,276
308	517	- - -	60	308	—	—	345	371	—	—	0	165	1,249
309	400	- - -	—	360	—	—	710	—	—	—	—	161	1,231
310	445	- - -	0	534	37	—	525	—	—	—	0	112	1,208
311	699	- - -	—	—	408	—	622	—	—	—	—	166	1,196
312	551	- - -	245	489	0	—	265	—	—	—	0	185	1,184
313	522	- - -	0	247	—	—	—	—	28	639	118	119	1,151
314	54	- - -	0	321	—	—	74	713	—	—	0	38	1,146
315	472	- - -	—	305	—	—	440	—	—	—	272	125	1,142
316	274	- - -	0	—	—	—	565	488	—	—	—	88	1,141
317	278	- - -	0	441	—	—	365	236	—	—	0	87	1,129
318	343	- - -	—	348	—	—	519	—	—	150	—	104	1,121
319	673	- - -	525	492	0	—	—	—	—	—	—	102	1,119
320	304	- - -	0	702	0	—	200	—	—	—	0	181	1,090
321	237	- - -	290	396	111	—	110	—	—	—	0	181	1,088
322	532	- - -	815	—	—	—	0	0	51	—	14	186	1,066
323	307	- - -	465	—	—	—	471	0	45	—	—	84	1,065
324	477	- - -	75	45	284	—	495	—	—	—	—	159	1,058
325	125	- - -	—	404	—	—	481	—	—	—	0	164	1,049
326	252	- - -	60	—	0	—	865	—	—	—	—	102	1,027
327	149	- - -	—	215	—	—	365	—	—	335	—	97	1,012
328	565	- - -	—	468	77	—	355	—	—	—	—	109	1,009
329	288	- - -	—	401	—	—	469	—	—	—	—	114	984
330	59	- - -	330	379	—	—	80	—	0	—	—	194	983
331	229	- - -	220	533	—	—	0	—	—	—	25	175	953

ROYAL MILITARY COLLEGE, AND ROYAL MARINE LIGHT INFANTRY. July 1878.

TABLE OF MARKS—UNSUCCESSFUL CANDIDATES—*continued.*

Number in Order of Merit.	Number in Examination.	—	Mathematics.	English Composition, Literature, and History.	Latin.	Greek.	French.	German.	Experimental Sciences.	Geography and Geology.	Drawing. Freehand.	Drawing. Geometrical.	Total.
		Maxima -	3,000	3,000	3,000	2,000	2,000	2,000	2,000	2,000	1,000	300	
332	207	- - -	0	453	0	—	310	—	—	—	0	143	906
333	541	- - -	—	83	649	—	45	—	—	—	—	119	896
334	428	- - -	—	35	—	—	—	686	—	—	—	127	848
335	463	- - -	65	288	—	—	410	—	—	—	—	75	838
336	559	- - -	0	69	—	—	618	—	—	0	0	128	815
337	57	- - -	—	324	220	—	120	—	—	—	0	145	809
338	427	- - -	0	389	0	—	304	—	—	—	—	96	789
339	498	- - -	35	—	—	—	615	—	—	—	—	124	774
340	96	- - -	0	262	—	—	238	—	—	—	36	174	710
341	217	- - -	155	238	—	—	0	66	—	—	—	196	655
342	153	- - -	0	272	35	—	210	—	—	—	—	124	641
343	18	- - -	205	177	0	—	80	—	—	—	0	113	575
344	497	- - -	0	170	110	—	90	—	—	—	0	161	531
345	671	- - -	—	188	0	—	275	—	—	—	—	—	463
346	258	- - -	—	169	0	—	170	—	—	—	—	116	455
347	227	- - -	0	178	—	—	136	—	—	—	0	139	453
348	686	- - -	—	0	—	—	264	—	—	—	0	142	406
349	182	- - -	—	197	38	—	0	—	—	—	—	166	401
350	492	- - -	0	132	—	—	125	—	—	—	—	136	393
351	346	- - -	0	21	0	—	210	—	—	—	—	159	390
352	92	- - -	0	279	—	—	0	0	—	—	0	103	382
353	106	- - -	—	178	—	—	0	—	—	—	70	126	374
354	257	- - -	—	78	—	—	250	—	—	—	—	—	328
355	328	- - -	0	143	—	—	35	29	—	—	0	119	326
356	275	- - -	0	142	—	—	0	—	—	—	—	165	307
357	495	- - -	0	297	—	—	—	—	—	—	—	—	297
358*	683	- - -	—	141	0	—	—	—	—	—	—	125	266
359*	666	- - -	—	124	—	—	10	—	—	—	—	125	259
360	415	- - -	0	197	0	—	0	—	—	—	—	21	218

* Nine candidates who passed the preliminary examination are omitted from the above table, having failed to comply with the rule which requires not less than two subjects, exclusive of drawing, to be taken up. 145 candidates failed to pass the preliminary examination.

UNIVERSITY CANDIDATES (UNSUCCESSFUL).

13	652	- - -	530	1,134	329	—	475	—	—	—	—	144	2,612
14	665	- - -	390	1,231	510	282	—	—	—	—	0	95	2,538
15	641	- - -	—	1,228	199	—	—	893	—	—	0	118	2,438
16	657	- - -	615	271	432	—	920	—	—	—	0	88	2,326
17	645	- - -	680	935	—	—	530	—	0	—	—	169	2,314
18	656	- - -	1,020	185	—	—	230	—	732	—	—	111	2,278
19	660	- - -	130	1,090	295	—	—	—	—	425	0	117	2,057
20	653	- - -	460	622	—	—	200	—	330	—	0	131	1,743
21	655	- - -	595	750	45	—	—	—	206	—	—	86	1,682
22	642	- - -	895	—	318	106	—	—	0	—	—	119	1,438

Two University candidates failed to pass the preliminary examination in geometrical drawing.

LIEUTENANTS OF MILITIA.

The following Lieutenants of Militia passed a qualifying examination at the same time for commissions in the army :—

No. in Examination.	Name.
734	Brooksbank; Arthur Heywood.
701	Brooman; George.
723	Couper; Ramsay George Henry.
738	Gifford; Robert.
724	Howard-Vyse; Howard Henry.
706	Huddart; Arthur Kerl.
731	Phipps; Arthur Barré.
716	Sitwell; Claude George Henry.
728	Walhouse; Charles Herbert de Kutzleben.
707	Woodley; John George.
715	Wynyard; Richard Damer.

Twenty Lieutenants of Militia failed either in the preliminary or the qualifying examination.

ROYAL MILITARY COLLEGE, AND ROYAL MARINE LIGHT INFANTRY. Dec. 1878.

5.—EXAMINATION OF CANDIDATES FOR ADMISSION TO THE ROYAL MILITARY COLLEGE, AND FOR FIRST APPOINTMENTS IN THE ROYAL MARINE LIGHT INFANTRY.

DECEMBER 1878.

REGULATIONS.

Regulations respecting Examinations for Admission to the Royal Military College and for First Appointments therefrom to the Army. [*Issued with G.O.* 88 *of* 1876.]

See p. 266.

MILITIA.

(For the Regulations see p. 270.

ROYAL MARINE LIGHT INFANTRY.

Extracts from Regulations respecting Examinations for First Appointments to the Royal Marines. [*Admiralty*, 14*th May* 1877.]

See p. 273.

TIME TABLE.

Place.	Time.	Subject of Examination.
	Monday, 2nd Dec.	MEDICAL EXAMINATION.
	Tuesday, 3rd Dec.	
	10 a.m. to 12.30 p.m.	*Geometrical Drawing.
	2 p.m. to 5 p.m.	English Composition.
	Wednesday, 4th Dec.	
	10 a.m. to 1 p.m.	English Literature. (1.)
	2 p.m. to 5 p.m.	English Literature. (2.)

* This paper is obligatory on ALL candidates, University or other, who have not already passed a preliminary examination in geometrical drawing.

ROYAL MILITARY COLLEGE, AND ROYAL MARINE LIGHT INFANTRY. Dec. 1878.

Place.	Time.	Subject of Examination.
The London University, Burlington Gardens, and the Exhibition Building South Kensington.	Thursday, 5th Dec. 10 a.m. to 1 p.m. 2 p.m. to 5 p.m.	English History. Mathematics. (1.)
	Friday, 6th Dec. 10 a.m. to 1 p.m. 2 p.m. to 5 p.m.	Latin Prose. Latin Verse.
	Saturday, 7th Dec. 10 a.m. to 1 p.m. 2 p.m. to 5 p.m.	Mathematics. (2.) *French.
	Monday, 9th Dec. 10 a.m. to 1 p.m. 2 p.m. to 5 p.m.	Freehand Drawing. *German.
	Tuesday, 10th Dec. 10 a.m. to 1 p.m. 2 p.m. to 5 p.m.	*Geology and Geography. *Chemistry and Heat. *Electricity and Magnetism.
	Wednesday, 11th Dec. 10 a.m. to 1 p.m. 2 p.m. to 5 p.m.	Greek (Prose). Greek (Verse).
	Thursday, 12th Dec. 10 a.m. to 1 p.m. 2 p.m. to 5 p.m.	Practical Chemistry.

* In these subjects there will be a vivâ voce examination, the time and place of which will be notified to the candidates who take them up.

ROYAL MILITARY COLLEGE, AND ROYAL MARINE LIGHT INFANTRY. Dec. 1878.

NOTICES.

1. On the first day of the examination each candidate will be required to state on a form which will be placed before him his address during the examination. If this address is changed, notice of every change should be sent to "The Secretary, Civil Service Commission, Westminster," until the result of the examination has been announced.
2. During the whole of the examination the candidates will be designated by numbers. On the first day a number will be assigned to each candidate, which will remain the same to the close of the examination; and he must affix his number (not his name) to every paper which he sends in.
3. The examination will in each case begin at the time named in the foregoing list, but the door of the examination room will be kept open for half an hour afterwards, in order that candidates may not be excluded owing to accidental delays. Candidates arriving after the expiration of that half hour will not be admitted.
4. Candidates will be required, before proceeding to the examination rooms, to leave, in a room provided for the purpose, their hats, overcoats, umbrellas, and any books or papers which they may have brought with them.
5. No candidate will be allowed to quit the examination room on any day until the expiration of half an hour from the time fixed for the commencement of the examination.
6. No candidate who has left the examination room during the hours assigned to paper work will be permitted to return to the paper which he has quitted.
7. Candidates wishing for explanation of the meaning of any of the questions before them may apply to the superintendent of the examination room. With this exception, perfect silence is to be preserved in the examination room; and any candidate guilty of disorderly or improper conduct in or about the room will be liable to be excluded from the examination.
8. Any candidate detected in the use of a book or manuscript brought with him for his assistance, or in copying from the papers of any other candidate, or in giving or receiving assistance of any description, will be regarded as disqualified, and his name will be removed from the list.
9. For the examination in geometrical drawing nothing will be required except mathematical instruments, which candidates are expected to bring with them.

   Candidates who take up freehand drawing must bring their own drawing pencils and brushes; but drawing paper, drawing boards, colours, Indian ink, and palettes will be supplied to them by the Commissioners.
10. Candidates will be informed by letter from this office of the place which they obtained in the examination. A table of marks will also be published, together with a reprint of the examination papers, about a fortnight after the result is declared, and may then be obtained through any bookseller.

Civil Service Commission,
Cannon Row, S.W.,
August 1878.

TABLE showing the MARKS obtained by the CANDIDATES for ADMISSION to the ROYAL MILITARY COLLEGE, and for FIRST APPOINTMENTS in the ROYAL MARINE LIGHT INFANTRY, who were examined under the directions of the Civil Service Commissioners, on the 3rd December 1878, and subsequent days.

*** A deduction of 250 has been made from the marks obtained in each subject except Geometrical Drawing.

SUCCESSFUL CANDIDATES, ORDINARY AND WEST INDIA.

Note.—Candidates marked thus (*) are eligible for Commissions in the West India Regiments only.

Number in Order of Merit.	Number in Examination.	Name.	Mathematics.	English.	Latin.	Greek.	French.	German.	Experimental Sciences.	Geography and Geology.	Drawing. Freehand.	Drawing. Geometrical.	Total.
		Maxima	3,000	3,000	3,000	2,000	2,000	2,000	2,000	2,000	1,000	300	
1	368	Howard-Vyse, Henry Granville Lindsay	725	1,406	2,447	1,364	—	—	—	—	—	154	6,006
2	177	Houghton; William	960	1,788	1,951	925	—	—	—	—	265	168	6,657
3	367	Walter; John MacNeill	2,325	1,493	—	—	740	800	—	—	47	215	5,620
4	423		—	1,143	2,090	1,240	713	—	—	—	—	—	5,186
5	86		1,675	1,094	—	—	930	1,305	—	—	—	167	5,171
6	15		1,760	1,493	1,286	—	456	—	—	—	0	161	5,156
7	5		—	1,296	2,086	963	669	—	—	—	80	—	5,099
8	337		1,640	1,364	1,409	—	428	—	—	—	—	176	5,017
9	222		1,840	1,549	—	—	480	—	919	—	—	235	5,014
10	221		1,345	1,151	1,764	—	561	—	—	—	—	166	4,987
11	2		—	1,224	1,785	—	859	920	—	—	—	185	4,976
12	230		1,995	1,215	790	—	—	—	—	563	162	211	4,937
13	135		1,980	1,491	850	—	375	—	—	—	0	193	4,889
14	137		1,955	1,043	—	—	721	815	—	—	0	178	4,712
15	51		—	1,499	1,743	394	832	—	—	—	—	178	4,696
16	368		—	1,072	2,286	767	360	—	—	—	—	173	4,658
17	301		1,390	1,498	135	—	1,355	—	—	—	0	201	4,579
18	121		—	941	1,786	—	1,036	—	—	642	—	151	4,556
19	224		—	1,343	2,076	585	245	—	—	—	107	172	4,528
20	120		—	1,119	1,465	—	1,339	—	—	305	157	142	4,527
21	46		1,415	628	1,104	—	659	—	—	—	465	170	4,441
22	3		1,985	1,160	—	—	519	—	—	544	8	220	4,436
23	98		1,525	—	1,407	689	669	—	—	—	—	219	4,429
24	13		1,540	1,005	831	—	823	—	—	—	—	208	4,407
25	17		1,720	1,414	42	—	1,064	—	—	—	0	191	4,401

ROYAL MILITARY COLLEGE, AND ROYAL MARINE LIGHT INFANTRY. Dec. 1878.

ROYAL MILITARY COLLEGE, AND ROYAL MARINE LIGHT INFANTRY. Dec. 1878.

TABLE showing the MARKS obtained by the CANDIDATES for ADMISSION to the ROYAL MILITARY COLLEGE, and for FIRST APPOINTMENTS in the ROYAL MARINE LIGHT INFANTRY.—SUCCESSFUL CANDIDATES—cont.

Number in Order of Merit.	Number in Examination Class.	Mathematics.	English.	Latin.	Greek.	French.	German.	Experimental Science.	Geography and Geology.	Drawing. Freehand.	Drawing. Construction.	Total.
		3,000	3,000	3,000	2,000	2,000	2,000	2,000	2,000	1,000	500	
1	4	—	1,826	1,618	835	696	—	—	—	135	157	4,371
2	2	1,700	986	207	—	713	—	—	—	275	227	4,308
3	3	1,650	898	—	—	699	—	—	—	0	185	4,349
4	1	1,445	1,271	811	—	60	—	—	801	120	173	4,381
5	5	1,190	1,077	1,079	—	374	—	—	1,338	—	126	4,256
6	6	850	1,047	—	—	667	—	—	—	—	139	4,253
7	7	825	1,349	1,108	—	540	910	—	—	250	160	4,631
8	8	800	1,344	996	—	305	—	—	—	—	216	4,275
9	9	—	1,305	1,203	—	944	920	—	619	—	145	4,361
10	10	700	1,196	1,023	—	539	—	—	—	—	147	4,213
11	11	—	694	889	—	1,188	1,450	—	—	—	105	4,326
12	12	1,700	1,110	—	—	1,323	1,450	—	—	30	183	4,136
13	13	1,015	1,453	961	—	467	—	—	—	—	186	4,116
14	14	—	1,304	1,403	980	667	—	—	—	—	178	4,132
15	15	1,140	600	1,491	—	605	—	—	—	—	141	4,092
16	16	1,250	1,335	1,154	197	645	—	—	—	0	160	4,086
17	17	1,100	1,450	918	—	—	—	—	—	—	139	4,018
18	18	1,200	1,402	—	—	349	—	—	877	0	170	4,017
19	19	1,563	1,128	619	—	93	—	—	—	0	191	4,011
20	20	1,200	811	940	—	516	—	—	—	0	161	3,964
21	21	1,700	1,369	490	—	516	—	—	—	0	180	3,945
22	22	1,395	1,456	—	—	140	—	—	—	—	189	3,938
23	23	1,700	795	—	—	455	—	—	—	—	182	3,928
24	24	1,349	1,411	69	—	165	570	—	—	250	209	3,905
25	25	—	1,065	1,345	319	585	610	—	—	150	190	3,865
26	26	2,305	848	—	—	247	—	463	—	546	151	3,864
27	27	1,900	1,326	813	—	164	—	—	—	—	211	3,865
28	28	1,470	901	—	—	86	650	—	—	55	195	3,836
29	29	1,450	1,000	1,000	—	1,000	—	—	—	0	0	4,450
30	30	1,450	1,000	1,000	—	1,000	—	—	—	0	0	4,450
31	31	1,450	1,000	1,000	—	1,000	—	—	—	0	0	4,450
32	32	1,450	1,000	1,000	—	1,000	—	—	—	0	0	4,450
33	33	1,450	1,000	1,000	—	1,000	—	—	—	0	0	4,450
34	34	1,450	1,000	1,000	—	1,000	—	—	—	0	0	4,450
35	35	1,450	1,000	1,000	—	1,000	—	—	—	0	0	4,450
36	36	1,450	1,000	1,000	—	1,000	—	—	—	0	0	4,450
37	37	1,450	1,000	1,000	—	1,000	—	—	—	0	0	4,450
38	38	1,450	1,000	1,000	—	1,000	—	—	—	0	0	4,450
39	39	1,450	1,000	1,000	—	1,000	—	—	—	0	0	4,450
40	40	1,450	1,000	1,000	—	1,000	—	—	—	0	0	4,450
41	41	1,450	1,000	1,000	—	1,000	—	—	—	0	0	4,450
42	42	1,450	1,000	1,000	—	1,000	—	—	—	0	0	4,450
43	43	1,450	1,000	1,000	—	1,000	—	—	—	0	0	4,450
44	44	1,450	1,000	1,000	—	1,000	—	—	—	0	0	4,450
45	45	1,450	1,000	1,000	—	1,000	—	—	—	0	0	4,450
46	46	1,450	1,000	1,000	—	1,000	—	—	—	0	0	4,450
47	47	1,450	1,000	1,000	—	1,000	—	—	—	0	0	4,450
48	48	1,450	1,000	1,000	—	1,000	—	—	—	0	0	4,450
49	49	1,450	1,000	1,000	—	1,000	—	—	—	0	0	4,450
50	50	1,450	1,000	1,000	—	1,000	—	—	—	0	0	4,450
51	51	1,450	1,000	1,000	—	1,000	—	—	—	0	0	4,450
52	52	1,450	1,000	1,000	—	1,000	—	—	—	0	0	4,450
53	53	1,450	1,000	1,000	—	1,000	—	—	—	0	0	4,450
54	54	1,450	1,000	1,000	—	1,000	—	—	—	0	0	4,450

afford

appe

TABLE showing the MARKS obtained by the CANDIDATES for ADMISSION to the ROYAL MILITARY COLLEGE, and for FIRST APPOINTMENTS in the ROYAL MARINE LIGHT INFANTRY.—SUCCESSFUL CANDIDATES—*cont.*

Number in Order of Merit.	Number in Examination.	Name.	Mathematics.	English.	Latin.	Greek.	French.	German.	Experimental Science.	Geography and Geology.	Drawing. Freehand.	Drawing. Geometrical.	Total.
		Maxima	3,000	3,000	3,000	3,000	2,000	2,000	2,000	2,000	1,000	500	
83	113		1,535	1,155	—	—	435	650	—	—	103	190	3,895
84	240		1,490	1,286	—	—	374	460	—	—	80	227	3,817
85	69		990	1,085	—	—	675	995	—	—	0	252	3,807
86	215		1,505	1,176	768	—	544	—	—	—	—	161	3,793
87	376		1,400	1,097	765	—	350	—	—	—	107	196	3,770
88	218		1,060	1,417	1,266	—	310	1,300	—	—	—	165	3,763
89	284		1,560	645	1,139	—	610	—	—	687	—	175	3,745
90	286		1,350	179	—	—	—	490	—	705	250	215	3,748
91	155		1,135	817	363	—	69	—	—	—	450	514	3,724
92	535		1,665	1,488	1,540	—	715	1,300	—	—	—	115	3,719
93	266		—	896	687	—	26	—	—	—	—	167	3,689
94	377		1,710	1,185	—	—	619	—	—	—	400	159	3,680
95	61		1,015	897	—	135	923	—	—	566	0	182	3,679
96	163		1,365	—	1,075	—	323	—	—	—	0	187	3,605
97	243		1,055	1,467	954	—	573	—	—	—	0	180	3,648
98	354		1,540	—	905	—	573	1,335	—	395	0	178	3,639
99	175		1,060	714	975	105	573	—	—	—	0	173	3,625
100	256		—	1,140	1,088	—	538	—	364	—	103	153	3,604
101	274		1,685	1,571	696	—	297	—	—	—	0	206	3,496
102	251		1,130	1,513	—	—	599	900	—	—	103	188	3,585
103	307		1,300	1,096	—	—	433	940	—	—	0	181	3,565
104	69		1,520	713	—	—	588	750	—	—	—	146	3,561
105	167		1,325	770	1,153	—	654	700	—	—	0	146	3,541
106	183		—	1,177	497	—	407	—	—	—	340	151	3,853
107	287		1,060	696	1,150	—	610	—	—	—	0	228	3,605
108	230		1,790	—	59	—	340	—	—	—	305	186	3,508
109	183		1,410	923	—	—	—	—	—	—	—	208	3,466
110	97		1,055	1,068	—	—	—	—	—	795	—	254	3,453
111	327		1,600	985	—	—	370	—	450	—	—	121	3,465

ROYAL MILITARY COLLEGE AND ROYAL MARINE LIGHT INFANTRY Dec. 1878.

TABLE showing the MARKS obtained by the CANDIDATES for ADMISSION to the ROYAL MILITARY COLLEGE, and for FIRST APPOINTMENTS in the ROYAL MARINE LIGHT INFANTRY.—SUCCESSFUL CANDIDATES—*cont.*

Number in Order of Merit.	Number in Examination.	Name.	Mathematics.	English.	Latin.	Greek.	French.	German.	Experimental Sciences.	Geography and Geology.	Drawing. Freehand.	Drawing. Geometrical.	Total.
		Maxima	3,000	3,000	3,000	2,000	2,000	2,000	2,000	2,000	1,000	300	
84	341		880	1,256	—	—	560	570	—	—	—	183	3,449
85	159		1,220	1,010	663	—	320	—	—	—	0	221	3,434
	264		1,270	834	—	—	510	650	—	—	—	170	3,434
87	40		815	0	—	—	865	1,620	—	—	—	193	3,433
88	52		970	654	—	—	309	—	—	1,070	218	209	3,430
89	280		1,885	633	—	—	388	290	—	—	0	218	3,414
90	180		1,815	690	—	—	248	—	—	507	—	153	3,413
91	290		1,165	1,144	—	—	76	—	—	780	0	219	3,384
92	47		870	699	—	—	627	—	1,000	—	0	164	3,360
93	42		1,080	1,550	85	—	546	—	—	—	0	98	3,359
94	271		1,390	954	524	—	302	—	—	—	0	187	3,357
95	326	Swanton; James Hutchinson	1,445	1,134	—	—	75	—	528	—	0	174	3,356
96	210	Kerr; Schomberg	1,165	974	—	—	476	525	—	—	0	215	3,355
97	408	*Pemberton; Seymour Blanchard	1,080	—	—	—	810	1,035	166	—	157	89	3,337
98	142	Ffennell; Richard	430	1,399	800	—	555	—	—	—	0	145	3,329
99	195	Jackson; Cecil	820	671	1,090	—	—	650	—	—	0	94	3,325
	213	Lamb; Edward John	—	1,101	1,332	494	161	—	—	—	—	237	3,325
	269	O'Brien; Donatus James Thomond	—	673	834	—	993	640	—	—	30	155	3,325
102	57	*Cracr	—	1,544	588	—	680	—	322	—	0	185	3,319
103	126	*Orr-I	1,490	993	—	—	605	—	—	—	—	202	3,290
104	207	*Kirk	1,385	256	—	—	609	805	—	—	35	186	3,277
105	90	*De M	1,330	850	—	—	188	—	—	681	—	214	3,263
106	134	*Ferra	1,505	488	—	—	563	—	—	450	74	170	3,250
107	309	*Seym	1,175	1,416	0	—	498	—	—	—	—	154	3,243
108	93	*Davi	1,310	268	—	—	1,265	—	—	245	0	124	3,242
109	206	*Kinl	520	1,068	—	—	746	730	—	—	—	169	3,233
110	169	*Hill;	1,550	1,298	—	—	0	—	18	—	174	183	3,223

TABLE showing the MARKS obtained by the CANDIDATES for ADMISSION to the ROYAL MILITARY COLLEGE.—SUCCESSFUL CANDIDATES—*cont.*

Number in Order of Merit.	Number in Examination.	Name.	Mathematics.	English.	Latin.	Greek.	French.	German.	Experimental Science.	Geography and Geology.	Drawing. Freehand.	Drawing. Geometrical.	Total.
		Maxima	3,000	3,000	3,000	2,000	2,000	2,000	2,000	2,000	1,000	300	
		UNIVERSITY CANDIDATES (SUCCESSFUL).											
1	432		1,490	1,022	1,826	—	1,295	—	—	—	140	220	5,993
2	448		—	1,522	1,987	1,217	973	—	—	—	0	198	5,787
3	436		—	1,555	1,653	—	1,055	1,010	—	—	170	133	5,676
4	447		1,740	—	1,982	1,113	320	—	—	—	—	159	5,214
5	431		—	1,390	2,091	747	706	—	—	—	—	161	5,196
6	435	ce	—	1,855	1,327	—	615	920	—	—	80	148	5,011
7	450		1,540	1,093	874	—	496	—	—	—	146	176	4,327
8	445		—	965	1,678	594	427	—	—	—	—	134	3,723
9	429		820	908	713	—	337	—	—	—	47	168	3,553
10	440		1,180	1,075	—	—	410	—	—	125	—	166	2,956
11	442		775	788	382	—	669	—	—	—	—	156	2,770
12	443	ney	205	694	988	—	685	—	—	—	—	201	2,753
		QUEEN'S CADETS (QUALIFIED).*											
1	433	Tribe; Cecil Walford	1,905	667	980	—	327	—	—	—	435	297	4,441
2	455	Smith; Thomas Hugh	590	—	393	—	185	330	—	—	0	125	1,623
3	452	Butcher; George James	305	878	0	—	61	—	—	—	—	144	1,388
		HONORARY QUEEN'S CADET (QUALIFIED).											
—	456	Shute; Henry Gwynn Deane	735	—	0	—	300	735	—	—	0	200	1,970

* Two Queen's Cadets failed to pass a qualifying examination.

ROYAL MILITARY COLLEGE, AND ROYAL MARINE LIGHT INFANTRY. Dec. 1878.

ROYAL MILITARY COLLEGE, AND ROYAL MARINE LIGHT INFANTRY. Dec. 1878.

TABLE showing the MARKS obtained by the CANDIDATES for ADMISSION to the ROYAL MILITARY COLLEGE.—INDIAN CADETS.

Number in Order of Merit.	Number in Examination.	Name.	Mathematics.	English.	Latin.	Greek.	French.	German.	Experimental Sciences.	Geography and Geology.	Drawing. Freehand.	Drawing. Geometrical.	Total.
		Maxima	3,000	3,000	3,000	2,000	2,000	2,000	2,000	2,000	1,000	300	
		INDIAN CADETS (QUALIFIED).*											
1	468	Phillott; Douglas Craven	—	1,175	1,341	280	280	—	—	—	—	155	3,231
2	472	Southey; Robert	625	689	—	—	758	1,095	—	—	—	—	3,167
3	473		400	1,321	—	—	—	1,380	0	—	—	—	3,101
4	460		800	—	—	—	670	1,075	—	32	155	—	2,732
5	459		1,010	1,099	0	—	0	—	—	—	—	189	2,298
6	466		—	496	—	—	658	885	—	—	185	65	2,291
7	461		815	616	—	—	0	—	—	369	216	153	2,171
8	464	Holloway; Edward Leigh	500	—	—	—	0	1,050	58	—	—	130	1,738
9	462	Doveton; Robert Taylor	1,390	—	0	—	0	—	—	—	0	168	1,558
10	469	Serres; Ernest Dominic	—	—	964	—	395	—	—	—	41	178	1,488
11	463	Hamilton; George Frederick Dashwood	565	451	0	—	95	—	—	—	—	179	1,290
12	470	Sherer; Lionel Copley	—	775	0	—	0	—	—	146	129	88	1,138
		HONORARY INDIAN CADETS (QUALIFIED).†											
1	487	Doran;	920	249	—	—	345	860	—	—	64	156	2,594
2	483	Bunny;	305	579	0	—	354	—	—	—	175	167	1,580
3	485	Wood; Leger	—	307	0	—	407	—	—	—	0	142	1,356
4	484	Montgo	—	420	—	—	110	0	—	450	0	196	1,176

* Two Indian Cadets failed to pass a qualifying examination.
† One Honorary Indian Cadet failed to pass a qualifying examination.

TABLE showing the MARKS obtained by the CANDIDATES for ADMISSION to the ROYAL MILITARY COLLEGE—LIEUTENANTS OF MILITIA.

Number in Order of Merit.	Number in Examination.		English.				German.	Experimental Sciences.	Geography and Geology.	Drawing.		Total.
										Freehand.	Geometrical.	
			3,000				2,000	2,000	2,000	1,000	300	
		LIEUTENANTS OF MILITIA (QUALIFIED).*										
1	494	Mount-Charles; The Earl of (Henry Francis)	—	459	397	—	153	—	—	—	90	1,599
2	531	Hearn; George	—	969	—	—	96	—	—	366	180	1,550
3	549	O'Connell; Maurice	475	676	—	—	60	—	—	134	205	1,552
4	498	Murray; William Hugh Eric	625	892	—	—	0	—	—	—	263	1,480
5	543	Pakenham; Edward Tatton	—	525	—	—	534	—	—	285	116	1,464
6	535	Bramly; Richard Dyneley Jennings	1,190	—	—	—	0	0	—	—	80	180	1,450
7	492	Pigott; Charles Berkeley	—	119	—	—	983	—	—	254	14	120	1,440
8	561	Plennes; Geoffrey Cecil Twisleton Wykeham	—	986	119	—	106	—	—	—	—	153	1,386
9	537	Preston; George Berthon	340	420	—	—	196	—	—	—	225	183	1,366
10	538	Wheler; Edward	790	351	—	—	—	—	—	—	—	183	1,324
11	556	Whitaker; Charles Hildyard Thornton	—	863	—	—	306	—	—	—	—	148	1,316
12	564	Christie; Langham Charles	—	520	—	—	—	570	—	—	—	106	1,196
13	568	Travers; Mordaunt Thomas Otho	475	511	—	—	—	—	—	—	—	155	1,141
14	502	Astley; Frank Edmund George	220	695	88	—	0	—	—	—	—	149	1,152
15	497	Cathcart; (Hon.) Charles	—	230	210	—	50	—	—	420	0	193	1,103

* Forty-eight Lieutenants of Militia failed either in the preliminary or the qualifying examinations. One Lieutenant of Militia, who passed the preliminary examination, is omitted from the above table, having failed to comply with the regulation which requires not less than two subjects, exclusive of drawing, to be taken up.

TABLE OF MARKS—*continued.*

UNSUCCESSFUL CANDIDATES.

Mathematics.	English.	Latin.	Greek.	French.	German.	Experimental Sciences.	Geography and Geology.	Drawing.		Total.
								Freehand.	Geometrical.	
2,000	2,000	2,000	2,000	2,000	2,000	2,000	2,000	1,000	300	
720	449			801	1,040	—	—	52	147	
615	604	—	—	918	900	—	—	—	110	3,207
700	637	—	—	865	730	—	—	—	197	3,207
1,255	676	912	157	—	—	—	—	—	206	
1,935	869	—	—	100	—	—	—	0	189	3,193
—	708	1,792	945	223	—	—	—	—	122	3,189
—	676	—	—	680	905	—	—	0	182	3,173
2,035	395	—	—	0	—	—	534	—	207	3,171
1,690	755	—	—	155	—	322	—	157	195	3,164
1,190	1,468	132	—	145	—	—	—	56	182	3,151
645	—	599	—	740	940	—	—	135	181	3,150
—	1,158	—	—	160	—	542	874	207	205	3,146
960	813	—	—	585	520	—	—	75	137	3,135
1,250	658	—	—	406	—	—	—	—	161	3,125
1,440	—	—	—	778	480	—	263	0	163	3,124
—	948	1,129	—	205	—	—	719	—	120	3,121
1,260	580	—	—	432	—	—	700	0	148	3,120
425	1,356	—	—	45	—	—	679	470	136	3,110
640	527	1,314	—	628	—	—	—	—	—	
—	906	—	—	1,061	680	—	470	—	100	3,107
1,315	872	—	—	715	—	—	—	36	164	
1,410	870	—	—	138	—	—	440	0	207	3,074
370	942	—	—	655	970	—	—	—	135	3,072
760	1,236	471	—	515	—	—	—	—	88	3,070
670	—	—	—	431	960	—	—	47	194	3,065
485	1,238	—	—	523	—	—	665	0	151	
1,570	657	—	—	0	—	—	607	—	218	3,052
1,120	929	—	—	194	600	—	—	—	205	3,048
820	—	590	—	230	—	—	—	205	177	3,006
—	905	679	—	748	530	—	—	—	137	3,000
1,470	555	—	—	295	—	678	—	0	—	2,996
815	1,064	91	—	394	—	—	—	460	159	2,983
970	906	—	—	50	750	—	—	102	194	2,972
1,440	1,014	—	—	43	270	—	—	0	191	2,958
885	923	—	—	155	—	—	610	157	228	2,957
610	1,182	476	—	515	—	—	—	—	105	2,948
1,110	828	—	—	523	370	—	—	—	113	2,944
—	961	—	—	265	880	—	572	69	192	2,929
1,000	395	1,214	—	190	—	—	—	—	112	2,911
890	767	784	—	—	—	322	—	—	136	2,899
755	546	—	—	734	700	—	—	—	161	2,896
1,125	1,096	242	—	265	—	—	—	—	175	2,903
—	914	165	—	553	1,060	—	—	—	178	2,890
1,135	536	—	—	199	—	—	641	245	131	2,887
—	989	1,137	157	464	—	—	—	0	179	2,886
1,145	1,123	—	—	419	—	—	—	—	193	2,880
370	899	1,419	—	90	—	—	—	—	94	2,872
260	1,065	631	—	717	—	—	—	—	168	2,841
490	1,158	347	—	502	—	—	—	200	154	2,841
1,380	901	29	—	—	—	530	—	—	—	
1,260	680	—	—	255	545	—	—	—	91	2,831
705	386	—	—	763	980	—	—	—	191	2,825
1,200	701	738	—	0	—	—	—	0	145	2,784
825	440	999	—	296	—	—	—	0	178	2,778
1,150	721	701	—	0	—	—	—	47	159	2,778
775	414	294	—	870	—	—	—	580	136	2,769
710	609	—	—	145	1,100	—	—	—	220	2,784
640	492	—	—	781	510	—	—	135	201	2,759
525	1,346	396	—	315	—	—	—	—	173	2,756
385	1,025	—	—	791	400	—	—	—	150	2,751
485	1,088	—	—	614	420	—	—	—	134	2,741
565	1,345	—	—	75	—	—	568	0	180	2,733
1,615	—	—	—	197	0	—	713	97	111	
1,300	365	418	—	497	—	—	—	—	138	2,718
920	825	—	—	125	660	—	—	—	165	2,695
1,035	1,074	—	—	183	250	—	—	0	152	2,694
715	1,291	—	—	219	180	—	—	146	130	2,681
1,215	421	—	—	—	—	—	402	—	171	2,669
1,360	956	0	—	212	—	—	—	—	126	2,656
215	1,160	457	—	735	—	—	—	—	88	2,655
860	—	805	60	738	—	—	—	—	197	2,639

TABLE OF MARKS—UNSUCCESSFUL CANDIDATES—*continued*.

Number in Order of Merit.	Number in Examination.		Mathematics.	English.	Latin.	Greek.	French.	German.	Sci-	Geo-	Drawing.		Total.
		Maxima . .	3,000	3,000	3,000	2,000	2,000	2,000	2				
182	119		545	911	[illegible]		239	—	—	—	—	144	2,633
183	356		1,035	—	—		295	1,080	0	—	0	246	2,626
184	157		1,485	629	155		143	—	—	—	80	155	2,617
185	373		1,290	561	—		224	—	—	378	0	158	[illegible]
	419		435	993	—		660	—	—	366	—	182	2,606
187	82		1,126	587	199		410	—	—	—	—	195	2,596
188	310		500	427	—		358	1,155	—	—	0	142	2,582
189	389		1,320	550	220		0	—	—	—	—	131	2,581
190	85		605	968	—		480	—	—	44	223	195	2,576
191	401		465	600	1,373		0	—	—	—	0	121	2,565
192	176		—	1,165	190		[illegible]	—	—	791	25	179	2,563
193	345		605	—	944	350	481	—	—	—	0	[illegible]	2,555
194	175		760	1,111	—		0	—	—	554	55	122	2,545
195	25		735	1,094	—		223	140	—	—	69	166	[illegible]
196	325		125	1,143	—		550	—	—	551	—	127	2,496
197	361		715	1,099	—		535	—	0	—	—	131	2,480
198	206		—	719	—		380	970	—	249	—	161	2,479
199	7		385	604	—		0	1,085	—	—	102	178	2,472
200	18		—	1,046	580	187	474	—	—	—	—	[illegible]	2,467
201	353		—	851	—	—	677	—	—	646	91	186	2,463
202	411		—	602	1,061	188	390	—	—	—	96	107	2,444
203	338		1,295	517	—	—	213	180	—	—	0	224	2,429
204	55		200	969	629	—	520	—	—	—	—	106	[illegible]
205	94		—	1,129	435	0	603	—	—	—	245	—	2,412
206	425		130	986	—	—	445	—	—	694	80	161	2,406
207	96		540	495	696	—	450	—	—	—	80	151	2,392
	128		—	654	263	—	[illegible]	350	—	—	—	146	2,392
209	392		315	1,029	0	—	253	—	—	—	71	210	2,382
210	227		350	1,058	357	—	8	—	—	—	—	108	2,381
211	236		1,315	645	77	—	120	—	—	—	0	131	2,288
212	372		—	841	—	—	0	1,130	124	—	—	176	2,231
213	396		360	—	610	—	641	—	493	—	—	146	2,249
214	84		530	1,043	—	—	456	—	—	—	—	167	2,246
215	391		—	1,116	953	—	0	—	—	—	—	167	2,236
216	9		1,170	658	—	—	229	—	0	—	0	167	2,224
217	359		925	525	—	—	0	—	—	470	102	198	2,220
218	172		580	549	—	—	204	—	—	[illegible]	—	143	2,201
219	353		1,710	281	—	—	0	—	—	—	—	188	[illegible]
	380		900	—	—	—	270	670	0	—	70	209	[illegible]
221	154		—	1,389	—	—	237	—	—	417	—	101	2,144
222	244		—	809	841	—	202	50	—	—	—	146	2,138
223	140		1,305	434	—	—	35	0	—	—	0	162	2,136
224	155		455	1,039	—	—	0	—	424	—	36	156	2,110
225	399		1,355	523	0	—	60	—	—	—	0	154	2,092
226	16		—	904	—	—	717	—	—	328	—	142	2,091
227	423		—	1,344	—	—	[illegible]	—	—	—	355	—	2,079
228	302		—	275	885	—	651	—	—	578	—	153	2,042
229	181		1,140	[illegible]	—	—	30	—	—	579	—	146	2,037
230	31		950	551	276	—	—	—	101	—	—	[illegible]	2,033
231	387		—	518	1,097	0	243	—	—	—	0	144	[illegible]
232	370		500	927	—	—	300	—	272	—	—	—	1,999
233	395		695	896	—	—	215	—	—	—	0	189	1,994
234	54		620	740	—	—	235	—	—	133	68	223	1,978
235	276		—	736	—	—	254	815	—	—	—	154	1,959
236	404		—	—	—	—	615	[illegible]	—	—	—	[illegible]	1,944
237	413		[illegible]	787	—	—	165	—	—	—	—	[illegible]	1,934
238	32		0	970	418	—	[illegible]	—	—	—	—	178	1,871
239	288		445	1,050	0	—	0	—	—	—	230	143	1,867
240	347		290	660	—	—	0	610	—	—	113	187	1,860
241	348		—	[illegible]	—	—	0	—	0	733	[illegible]	147	1,859
242	174		—	1,090	—	—	285	—	—	230	—	103	1,801
243	33		555	674	45	—	351	—	—	—	—	178	1,803
244	359		—	906	267	120	159	—	—	—	126	156	1,783
245	346		—	667	995	0	148	—	—	—	—	—	1,786
246	370		—	650	247	—	62	—	—	319	538	153	1,771
247	330		—	1,306	—	—	240	—	—	—	0	187	1,741
248	331		—	970	64	—	541	—	—	—	63	201	1,739
249	151		120	594	0	—	455	—	—	—	380	196	1,735
250	79		—	220	—	—	606	570	—	—	—	167	[illegible]
251	311		—	522	585	—	0	—	—	430	0	120	1,657
252	130		—	496	0	—	350	—	—	547	69	180	1,644
	348		780	267	487	—	0	—	—	—	—	197	1,641
253	425		485	667	—	—	339	—	—	—	41	169	1,641

ROYAL MILITARY COLLEGE, AND ROYAL MARINE LIGHT INFANTRY. Dec. 1878.

TABLE OF MARKS—UNSUCCESSFUL CANDIDATES—*continued.*

Number in Order of Merit.	Number in Examination.		Mathematics.	English.	Latin.	Greek.	French.	German.	Experimental Sciences.	Geography and Geology.	Drawing.		Total.
											Freehand.	Geometrical.	
		Maxima - -	3,000	3,000	3,000	2,000	2,000	2,000	2,000	2,000	1,000	300	
255	186		945	172	—	—	32	—	—	338	—	137	1,624
256	319		525	622	—	—	0	—	—	279	0	169	1,595
257	296		280	718	0	—	467	—	—	—	0	112	1,577
258	95		200	34	—	—	435	760	—	—	—	125	1,554
259	125		245	951	0	—	76	—	—	—	96	163	1,531
260	415		465	462	—	—	0	320	—	—	157	126	1,530
261	132		5	721	—	—	16	—	—	671	0	110	1,523
262	490		—	752	—	—	515	—	—	—	115	135	1,517
263	161		485	720	—	—	27	60	—	—	—	216	1,508
264	209		—	518	—	—	345	380	—	—	96	158	1,497
265	254		180	665	475	—	0	—	—	—	—	172	1,492
266	190		930	432	—	—	114	—	0	—	—	—	1,476
267	34		195	825	—	—	362	—	—	—	0	93	1,475
	53		1,475	—	—	—	0	—	—	—	—	—	1,475
269	336		375	776	—	—	81	—	—	120	—	121	1,473
270	35		—	839	0	—	553	—	—	—	—	79	1,471
	152		825	483	—	—	—	—	—	—	30	183	1,471
272	165		470	736	0	—	25	—	—	—	0	231	1,462
273	412		130	839	—	—	0	—	—	379	0	112	1,460
274	357		520	317	493	—	0	—	—	—	—	104	1,434
275	178		—	924	7	—	60	—	—	287	—	114	1,392
276	374		—	600	577	—	0	—	—	—	—	194	1,371
277	252		980	206	—	—	—	—	22	—	162	—	1,370
278	318		325	694	332	—	0	—	—	—	—	—	1,351
279	27		—	216	550	0	458	—	—	—	—	123	1,347
280	228		—	972	151	—	10	—	—	—	—	195	1,328
281	23		—	542	186	—	152	—	—	278	—	132	1,290
282	354		0	800	—	—	290	130	—	—	0	67	1,287
283	14		—	728	94	—	255	—	—	—	—	203	1,280
284	420		—	786	—	—	210	—	—	279	—	—	1,275
285	83		610	294	0	—	168	—	—	—	—	197	1,269
	208		415	—	89	—	140	500	—	—	—	125	1,269
287	6		0	535	—	—	604	—	—	—	—	127	1,266
288	143		0	892	677	—	106	—	—	—	—	86	1,261
289	124		—	696	—	—	344	—	—	—	0	198	1,238
290	99		—	554	—	—	—	460	—	—	—	220	1,234
291	349		550	457	—	—	15	0	—	—	—	194	1,216
292	403		345	744	0	—	—	—	—	—	—	106	1,195
293	44		530	—	0	—	309	—	—	350	—	—	1,189
294	366		130	190	—	—	375	—	—	—	345	146	1,186
295	262		—	880	—	—	115	—	0	—	0	187	1,182
296	8		—	274	140	—	664	—	—	—	—	92	1,170
297	346		—	36	764	—	170	—	—	0	—	178	1,150
298	402		—	573	—	—	433	—	—	—	—	77	1,083
299	334		90	477	—	—	324	30	—	—	0	154	1,075
300	407		105	613	—	—	210	—	—	—	—	123	1,051
301	312		330	188	—	—	347	—	—	—	0	107	972
302	184		60	632	60	—	197	—	—	—	—	—	949
303	299		—	347	—	—	330	—	—	156	—	105	938
304	97		—	138	—	—	290	—	—	319	—	185	932
305	406		320	347	35	—	60	—	—	—	0	146	908
306	405		—	597	—	—	161	—	—	—	—	136	894
307	247		—	448	—	—	100	—	0	—	118	218	879
308	418		480	216	—	—	—	—	—	—	—	160	856
309	363		—	206	—	—	62	420	—	—	—	123	811
310	373		—	423	—	—	189	—	0	—	0	163	775
311	421		—	562	—	—	0	—	—	—	—	174	736
312	414		—	652	0	—	5	—	—	—	—	63	720
313	56		0	501	—	—	65	0	—	—	69	81	716
314	10		535	—	—	—	0	—	0	0	0	171	706
315	385		130	228	—	—	190	—	—	—	0	115	668
316	382		300	64	—	—	145	0	—	—	0	146	655
317	278		505	—	—	—	0	—	—	—	—	119	624
318	300		75	0	423	—	80	—	—	—	—	28	606
319	329		—	159	—	—	97	—	—	0	41	82	379
320	273		35	117	—	—	0	—	—	46	—	96	294
321	156		30	134	—	—	0	0	—	—	—	—	214
322	409		0	59	—	—	0	—	—	—	—	—	59

One candidate who passed the preliminary examination is omitted from the above table, having failed to comply with the regulation which requires not less than two subjects, exclusive of drawing, to be taken up.

TABLE OF MARKS—UNSUCCESSFUL CANDIDATES—*continued*.

Number in Order of Merit.	Number in Examination.	—	Mathematics.	English.	Latin.	Greek.	French.	German.	Experimental Sciences.	Geography and Geology.	Drawing.		Total.
											Freehand.	Geometrical.	
		UNIVERSITY CANDIDATES (UNSUCCESSFUL).											
		Maxima - - -	3,000	3,000	3,000	2,000	2,000	2,000	2,000	2,000	1,000	300	
13	451	- - - -	530	—	956	650	426	—	—	—	0	123	2,685
14	433	- - - -	510	875	848	272	—	—	—	—	—	152	2,657
15	439	- - - -	715	995	566	0	—	—	—	—	207	170	2,653
16	436	- - - -	—	917	594	—	—	700	—	—	190	164	2,565
17	430	- - - -	415	1,197	449	265	—	—	—	—	—	161	2,487
18	434	- - - -	340	1,050	461	—	—	—	—	386	—	180	2,417
19	444	- - - -	855	589	234	—	—	—	622	—	—	84	2,384
20	437	- - - -	750	375	480	—	646	—	—	—	0	96	2,347
21	446	- - - -	—	624	1,097	—	145	—	—	—	—	169	2,035
22	441	- - - -	325	520	0	—	—	—	542	—	—	115	1,502
23	449	- - - -	695	84	—	—	0	—	0	—	—	136	915

LIEUTENANTS OF MILITIA. Oct. 1878.

6.—LIEUTENANTS OF MILITIA EXAMINED FOR COMMISSIONS IN THE ARMY.

*** *Some of these candidates were examined under the Regulations which expired at the end of* 1878, *see p.* 270, *and the remainder under the following Regulations issued as a Special Auxiliary and Reserved Forces Circular on 2nd March* 1878.

---

1. On and after the 1st January 1879, the system of permitting officers commanding militia regiments to nominate subalterns of their regiments for commissions in the army will be discontinued, and any subaltern officer of a militia regiment who may wish to become a candidate for an army commission will, subject to the conditions herein-after prescribed, be allowed to compete for a commission in an examination in military subjects.

2. These competitive examinations will be held twice a year, in the months of March and September, before boards of officers appointed for the purpose at the several stations named in the Appendix A, and, subject to the rule as to age in paragraph 5, candidates will be allowed three trials only, which trials must take place at consecutive examinations. The first examination in the year 1879 will, however, be specially deferred from March until June.

3. Examination papers will be prepared by the Director-General of military education, and due notice will be given of the days on which the examination will be held.

4. The subjects of the competitive military examination will be those named in the Appendix B.

5. An officer who is recommended as a candidate will be required—

(*a.*) To be within the ages of 19 and 22 on the first of January immediately preceding the competitive military examination which he may be allowed to attend.

(*b.*) To have served two annual trainings, and to have passed the examination and obtained the certificate, W.O. Form 748, required of a subaltern previous to the end of the second training after his appointment.

(*c.*) To have passed the examination before the Civil Service Commissioners, described in Appendix C, or to produce an university certificate, as prescribed in Appendix D.

6. The application of a militia subaltern to be admitted to the competitive military examination will be submitted through the officer commanding his regiment, who will state whether he can recommend the officer as a fit and proper person for a commission in the army; and in forwarding the same, the officer commanding the sub-district and the general officer commanding the district will state their opinion of the candidate. In the event of the officer commanding the regiment being unable to recommend the candidate, the special reasons will be stated.

7. The application must be forwarded to the Military Secretary, Horse Guards, War Office, prior to the 1st January and 1st July respectively, except as regards the examination specially deferred till June 1879, for

which applications will be received up to 1st April 1879, and should be accompanied by—

(*a.*) Certificate of birth, or, in default, a declaration made by one of the candidate's parents or guardians before a magistrate giving his exact age. A certificate of baptism cannot be accepted in lieu of a certificate of birth.

(*b.*) Certificate of having served two annual trainings.

(*c.*) The certificate, W.O. Form 748, showing also the date on which the finding of the board which granted the certificate was approved.

(*d.*) A certificate from the Civil Service Commissioners that the candidate has passed the examination described in Appendix C., or an university certificate as prescribed in Appendix D.

(*e.*) The candidate's address, and an intimation as to which of the stations named in the Appendix A he would wish to attend for examination.

8. On the receipt of the application and documents referred to in paragraph 7, instructions will be issued to the candidate as to the place and time at which he will be required to present himself for the competitive military examination.

9. The examination before the Civil Service Commissioners referred to in paragraph 5 (*c*), will be held twice a year in the months of April and October.

10. A militia subaltern who is desirous of attending the examination before the Civil Service Commissioners must apply accordingly to his commanding officer, at such a date as will allow of the commanding officer forwarding the application to the Military Secretary not later than the 15th February or 15th August, for the April and October examinations respectively. The commanding officer in forwarding the application will certify that the subaltern in question is, having regard to the maximum limit laid down in paragraph 5 (*a*), eligible in point of age, and that he is prepared, when necessary, to recommend him in the manner prescribed in paragraph 6. Not more than three trials at these examinations will be allowed.

11. Until further notice, sixty army commissions will be allotted to the successful competitors at each of the half-yearly competitive examinations.

12. Clause 29, Auxiliary and Reserve Forces Circulars, 1878, is hereby cancelled.

APPENDIX A.

STATIONS at which MILITIA SUBALTERNS who are recommended as CANDIDATES for ARMY COMMISSIONS may appear for the COMPETITIVE MILITARY EXAMINATION.

England.	Scotland.	Ireland.
Colchester.	Edinburgh.	Dublin.
Aldershot.		Belfast.
Dover.		Cork.
Portsmouth.		
Plymouth.		
York.		

APPENDIX B.

LIEUTENANTS OF MILITIA. Oct. 1878.

SUBJECTS OF THE MILITARY COMPETITIVE EXAMINATION TO BE PASSED BY MILITIA SUBALTERNS.

1. The rifle drill and practice, and the theoretical principles of musketry, as defined in the authorised book of instructions.
2. Duties of regimental officers, of officers commanding guards, and of subaltern officers of guards under officers of superior rank, with the mode of marching reliefs and posting sentries.
3. The Queen's regulations and orders for the army, 1873 (sections 6, 7, 8, 12, 13, 16, 17, 23, and Appendix).
4. The Mutiny Act (sections 6 to 29), and Articles of War (sections II. and III.).
5. The regulations of the Army in regard to the pay and messing of troops, the supply of clothing and necessaries, and all details in regard to the mode of carrying the various articles of a soldier's kit.

APPENDIX C.

EXAMINATION to be passed before the CIVIL SERVICE COMMISSIONERS.

(1.) Mathematics,—viz. (*a*) arithmetic, including vulgar and decimal fractions, proportion, and simple interest; (*b*) geometry, not beyond the standard of the first book of Euclid.
(2.) French, German, or some other modern language; the examination being limited to a translation from the language, and grammatical questions.
(3.) Writing English correctly, and in a good legible hand, from dictation.
(4.) The elements of geometrical drawing; including the construction of scales, and the use of simple mathematical instruments.
(5.) Geography.

No marks will be allotted for the above preliminary examination, excepting for geometrical drawing, the maximum number for which will be 300.

The preliminary examination will, in the case of candidates who have passed it at previous examinations, be dispensed with in all subjects, except geometrical drawing.

Candidates will also be exempted from the "preliminary" examination, in all subjects except geometrical drawing, if they can produce the certificate of the Oxford and Cambridge Schools Examination Board, provided it embraces mathematics. If it does not include that subject, they will be required also to undergo an examination therein.

The "further examination" will be proceeded with immediately on the conclusion of the "preliminary examination." Candidates who fail in the preliminary examination will be informed of their failure as soon as possible, and they will then be released from further attendance.

The subjects of the further examination and maximum number of marks obtainable for each subject will be as follows:—

	Marks.
(1.) Mathematics, viz., algebra up to and including quadratic equations; the theory and use of lorgarithms; geometry; plane trigonometry; and mensuration - -	3,000
(2.) English composition, tested by the power of writing an essay, letter, or précis; English literature, limited to specified authors, and English history, limited to certain fixed periods; the authors and periods being notified beforehand - - - - - -	3,000

	Marks.
(3.) Latin	3,000
(4.) Greek	2,000
(5.) French; the examination to be partly colloquial	2,000
(6.) German; the examination to be partly colloquial	2,000
*(7.) Experimental sciences,—viz., (*a*) chemistry and heat; or (*b*) electricity and magnetism	2,000
(8.) General and physical geography and geology	2,000
(9.) Drawing (free hand)	1,000

Of these nine subjects candidates will not be allowed to take up more than four nor less than two, exclusive of drawing.

In order to secure a proper proficiency in all the subjects taken up by a candidate, a certain number will be deducted from the marks gained by the candidate in each subject.

To pass this examination, a candidate must obtain, in the subjects which he takes up, such an aggregate total of marks as may, after the deduction above mentioned, indicate in the judgment of the Civil Service Commissioners a competent amount of general proficiency.

APPENDIX D.

CERTIFICATE to be produced by a GRADUTE or STUDENT of the UNIVERSITIES.

A certificate from the proper authority that he has taken his Degree in Arts, or has passed the examination specified below, at one of the following Universities, viz.:—

Oxford, "moderations."

Cambridge, "the previous examination."

Dublin, "the final examination of the senior freshman year," or, "the final examination of the school of engineering."

Durham, "the first year's examination."

Queen's University, Ireland, "the first university examination in arts or in engineering."

Scotch Universities, "the examination for candidates for the army."

London University, the "first examination" for the degrees of B.A., LL.B., B.Sc., or M.B.

TIME TABLE.

The Subjects printed in Italics are obligatory.

Place.	Time.	Subject of Examination.
	Friday, 18th Oct.	
	10 a.m. to 1 p.m.	*Arithmetic and English Dictation* (1).
	2 p.m. to 4.30. p.m.	*Modern Language and English Dictation* (2).
	Saturday, 19th Oct.	
	10 a.m. to 12.30 p.m.	*Geometrical Drawing.*
	1.30p.m.to 5.30p.m.	*Euclid*, 1.30—3.15. *Geography*, 3.30—5.30.
	Monday, 21st Oct.	
	11 a.m.	MEDICAL EXAMINATION.

* Subjects (*a*) and (*b*) are alternative; a candidate will not be allowed to take up both.

LIEUTENANTS OF MILITIA. Oct. 1878.

Place.	Time.	Subject of Examination.
The London University, Burlington Gardens.	Tuesday, 22nd Oct.	
	10 a.m. to 1 p.m.	*Geology and Geography.
	2 p.m. to 5 p.m.	English Composition.
	Wednesday, 23rd Oct.	
	10 a.m. to 1 p.m.	Mathematics (1).
	2 p.m. to 5 p.m.	Mathematics (2).
	Thursday, 24th Oct.	
	10 a.m. to 1 p.m.	English Literature (1).
	2 p.m. to 5 p.m.	English Literature (2).
	Friday, 25th Oct.	
	10 a.m. to 1 p.m.	Latin (Prose).
	2 p.m. to 5 p.m.	Latin (Verse).
	Saturday, 26th Oct.	
	10 a.m. to 1 p.m.	English History.
	2 p.m. to 5 p.m.	*Chemistry and Heat. *Electricity and Magnetism.
	Monday, 28th Oct.	
	10 a.m. to 1 p.m.	Freehand Drawing.
	2 p.m to 5 p.m.	*French.
	Tuesday, 29th Oct.	
	10 a.m. to 1 p.m.	Greek (Prose).
	2 p.m. to 5 p.m.	*German.
	Wednesday, 30th Oct.	
	10 a.m. to 1 p.m.	Greek (Verse).

* *In these subjects there will be an oral Examination, the time and place of which will be notified to the candidates who take them up. There will also be an Examination in Practical Chemistry.*

NOTICES.

(These were the same as those printed on p. 273.)

The following lieutenants of militia passed a qualifying examination for commissions in the army at the examination held 18th October 1878 and following days:—

I.—CANDIDATES examined under the REGULATIONS in force in 1878.

Acheson; Percival Havelock.
Alderson; Edwin Alfred Hervey.
Blackett; Christopher Montague.
Blake; Robert William Marmaduke.
Borton; Charles Edward.
Burke; Thomas Edmund.
Burn-Murdoch; John Francis.
Campbell; Alan Laird.
Chichester; Alan George.
Clowes; Charles Edward.
Corfield; Charles John.
Cotton; Henry Robert Stapleton.
Cradock; Sheldon William Keith.
Crosse; Sidney George.
D'Arcy; William Irvine.
Dawson-Damer; Lionel George Henry Seymour.
Dolphin; Edgar.
Elderton; Alan.
Firman; Humphrey Brooke.
Graham; Herbert Reginald Curteis.
Hadow; Arthur de Salis.
Haines; Gregory Sinclair.
Heigham; Clement John Malcolm.
Holloway; James Clinton.
Hone; Thomas.
James; William Lancelot.
Jones; George Goring John Sutton.
Knight; Charles Andrew Ross Boughton.
Knox; William.
Lennitte; Henry James.
Lloyd; John David Arthur Thomas.
Mason; Henry Hyde Williamson.
Pearson; Charles Lyons Markham.
Seel; Edmund Harrington Molyneux.
Shaw; Charles Conrad.
Stewart; Josiah Scott.
Winn; Charles Cavendish.
Winn; Rowland.

II.—CANDIDATES examined under the REGULATIONS coming into force on the 1st January 1879.

Adams-Connor; Harry George.
Bird; Gerald Thornton.
Browne; William Byron.
Colomb; Richard Pasley.
D'Aeth; Lewis Marbrough Hughes.
Elton; Arthur Bayard.
Goodrich; Arthur Mainwaring.
Grubbe; Edmund Alexander.
Hackett-Thompson; F.
Hill; Alan Richard.
Hume; John James Francis.
Lane-Fox; William Augustus.
Lean; Kenneth Edward.
Lawford; Arthur John.
Renton; William Gordon.
Strachey; John.
Wilson; Alexander.
Wilson; Archdale Irby.
Woods; Matthew Herbert.
Wyllie; Frederick.

Appendix VI.

CIVIL SERVICE OF INDIA.

CONTENTS.

Page

1. Instructions issued to Candidates with respect to their Periodical Examinations :—
   - Instructions to the Candidates selected in 1876 - - - 306
   - Instructions to the Candidates selected in 1877 - - - 310
   - Instructions to the Candidates selected at the Open Competition of April 1878 - - - - - - - - 314
   - Instructions to the Candidates selected at the Open Competition of July 1878 - - - - - - - - 321
2. Open Competition for the Civil Service of India, April 1878* :—
   - Regulations - - - - - - - - 326
   - Table of Marks - - - - - - - 330
3. Open Competition for the Civil Service of India, July 1878* :—
   - Regulations - - - - - - - - 334
   - Table of Marks - - - - - - - 338
4. Final Examination of the Candidates selected in 1876 (June 1878):—
   - Regulations - - - - - - - - 343
   - Examination Papers - - - - - - - 351
   - Table of Marks - - - - - - - 389
5. Papers used at the Examination for Prizes of the Candidates selected in 1876 (June 1878) - - - - - - - 393
6. Open Competition of 1878 for admission to the Royal Indian Engineering College, Cooper's Hill, and Examination for the Indian Telegraph Department :—
   - Regulations - - - - - - - - 408
   - Examination Papers - - - - - - - 412
   - Table of Marks - - - - - - - 442
7. India Forest Service : Examination of November 1878 :—
   - Regulations - - - - - - - - 445
   - Examination Papers - - - - - - - 448
   - Table of Marks - - - - - - - 462
8. Statistics (India Civil Service) - - - - - - 463

* The Examination Papers set at these Competitions, together with the Tables of Marks, have been printed in a separate form and may be obtained through any bookseller.

*** For Correspondence respecting the Civil Service of India, *see* Appendix VIII.

ROYAL MILITARY COLLEGE, AND ROYAL MARINE LIGHT INFANTRY. Dec. 1878.

TABLE OF MARKS—UNSUCCESSFUL CANDIDATES—*continued.*

Number in Order of Merit.	Number in Examination.	—	Mathematics.	English.	Latin.	Greek.	French.	German.	Experimental Sciences.	Geography and Geology.	Drawing. Freehand.	Drawing. Geometrical.	Total.
		Maxima - -	3,000	3,000	3,000	2,000	2,000	2,000	2,000	2,000	1,000	300	
255	186	- - - -	945	172	—	—	32	—	—	338	—	137	1,624
256	319	- - - -	525	622	—	—	0	—	—	279	0	169	1,595
257	296	- - - -	280	718	0	—	467	—	—	—	0	112	1,577
258	95	- - - -	200	34	—	—	435	760	—	—	—	125	1,554
259	125	- - - -	245	951	0	—	76	—	—	—	96	163	1,531
260	415	- - - -	465	462	—	—	0	320	—	—	157	126	1,530
261	132	- - - -	5	721	—	—	16	—	—	671	0	110	1,523
262	490	- - - -	—	752	—	—	515	—	—	—	115	135	1,517
263	161	- - - -	485	720	—	—	27	60	—	—	—	216	1,508
264	209	- - - -	—	518	—	—	345	380	—	—	96	158	1,497
265	254	- - - -	180	665	475	—	0	—	—	—	—	172	1,492
266	190	- - - -	930	432	—	—	114	—	0	—	—	—	1,476
267	34	- - - -	195	825	—	—	362	—	—	—	0	93	1,475
	53	- - - -	1,475	—	—	—	0	—	—	—	—	—	1,475
269	336	- - - -	375	776	—	—	81	—	—	120	—	121	1,473
270	35	- - - -	—	839	0	—	553	—	—	—	—	79	1,471
	152	- - - -	825	433	—	—	—	—	—	—	30	183	1,471
272	165	- - - -	470	736	0	—	25	—	—	—	0	231	1,462
273	412	- - - -	130	830	—	—	0	—	—	379	0	112	1,460
274	357	- - - -	520	317	493	—	0	—	—	—	—	104	1,434
275	178	- - - -	—	924	7	—	60	—	—	287	—	114	1,392
276	374	- - - -	—	600	577	—	0	—	—	—	—	194	1,371
277	252	- - - -	980	206	—	—	—	—	22	—	162	—	1,370
278	318	- - - -	325	694	332	—	0	—	—	—	—	—	1,351
279	27	- - - -	—	216	550	0	458	—	—	—	—	123	1,347
280	228	- - - -	—	972	151	—	10	—	—	—	—	195	1,328
281	23	- - - -	—	542	186	—	152	—	—	278	—	132	1,290
282	354	- - - -	0	800	—	—	290	130	—	—	0	67	1,287
283	14	- - - -	—	728	94	—	255	—	—	—	—	203	1,280
284	420	- - - -	—	786	—	—	210	—	—	279	—	—	1,275
285	83	- - - -	610	294	0	—	168	—	—	—	—	197	1,269
	208	- - - -	415	—	89	—	140	500	—	—	—	125	1,269
287	6	- - - -	0	535	—	—	604	—	—	—	—	127	1,266
288	143	- - - -	0	392	677	—	106	—	—	—	—	86	1,261
289	124	- - - -	—	696	—	—	344	—	—	—	0	198	1,238
290	99	- - - -	—	554	—	—	—	460	—	—	—	220	1,234
291	349	- - - -	550	457	—	—	15	0	—	—	—	194	1,216
292	403	- - - -	345	744	0	—	—	—	—	—	—	106	1,195
293	44	- - - -	530	—	0	—	309	—	—	350	—	—	1,189
294	366	- - - -	130	190	—	—	375	—	—	—	345	146	1,186
295	282	- - - -	—	880	—	—	115	—	0	—	0	187	1,182
296	8	- - - -	—	274	140	—	664	—	—	—	—	92	1,170
297	346	- - - -	—	38	764	—	170	—	—	0	—	178	1,150
298	402	- - - -	—	573	—	—	433	—	—	—	—	77	1,083
299	334	- - - -	90	477	—	—	324	30	—	—	0	154	1,075
300	407	- - - -	105	613	—	—	210	—	—	—	—	123	1,051
301	312	- - - -	330	188	—	—	347	—	—	—	0	107	972
302	184	- - - -	60	632	60	—	197	—	—	—	—	—	949
303	299	- - - -	—	347	—	—	330	—	—	156	—	105	938
304	97	- - - -	—	138	—	—	290	—	—	319	—	185	932
305	406	- - - -	320	347	35	—	60	—	—	—	0	146	908
306	405	- - - -	—	597	—	—	161	—	—	—	—	136	894
307	247	- - - -	—	443	—	—	100	—	0	—	118	218	879
308	418	- - - -	480	216	—	—	—	—	—	—	—	160	856
309	363	- - - -	—	206	—	—	62	420	—	—	—	123	811
310	373	- - - -	—	423	—	—	189	—	0	—	0	163	775
311	421	- - - -	—	562	—	—	0	—	—	—	—	174	736
312	414	- - - -	—	652	0	—	5	—	—	—	—	63	720
313	56	- - - -	0	501	—	—	65	0	—	—	69	81	716
314	10	- - - -	535	—	—	—	0	—	0	0	0	171	706
315	385	- - - -	130	228	—	—	190	—	—	—	0	115	663
316	382	- - - -	300	64	—	—	145	0	—	—	0	146	655
317	278	- - - -	505	—	—	—	0	—	—	—	—	119	624
318	300	- - - -	75	0	423	—	80	—	—	—	—	28	606
319	329	- - - -	—	159	—	—	97	—	—	0	41	82	379
320	273	- - - -	35	117	—	—	0	—	—	46	—	96	294
321	156	- - - -	30	134	—	—	0	0	—	—	—	—	214
322	409	- - - -	0	59	—	—	0	—	—	—	—	—	59

One candidate who passed the preliminary examination is omitted from the above table, having failed to comply with the regulation which requires not less than two subjects, exclusive of drawing, to be taken up.

TABLE OF MARKS—UNSUCCESSFUL CANDIDATES—*continued.*

Number in Order of Merit.	Number in Examination.	—	Mathematics.	English.	Latin.	Greek.	French.	German.	Experimental Sciences.	Geography and Geology.	Drawing.		Total.
											Freehand.	Geometrical.	
		UNIVERSITY CANDIDATES (UNSUCCESSFUL).											
		Maxima - -	3,000	3,000	3,000	2,000	2,000	2,000	2,000	2,000	1,000	300	
13	451	- - - -	530	—	956	650	426	—	—	—	0	123	2,685
14	433	- - - -	510	875	848	272	—	—	—	—	—	152	2,657
15	439	- - - -	715	995	566	0	—	—	—	—	207	170	2,653
16	436	- - - -	—	917	594	—	—	700	—	—	190	164	2,565
17	430	- - - -	415	1,197	449	265	—	—	—	—	—	161	2,487
18	434	- - - -	340	1,050	461	—	—	—	—	386	—	180	2,417
19	444	- - - -	855	589	234	—	—	—	622	—	—	84	2,384
20	437	- - - -	750	375	480	—	646	—	—	—	0	96	2,347
21	446	- - - -	—	624	1,097	—	145	—	—	—	—	169	2,035
22	441	- - - -	325	520	0	—	—	—	542	—	—	115	1,502
23	449	- - - -	695	84	—	—	0	—	0	—	—	136	915

Candidates of 1876. Final examination. Special instructions.

method in the analytical summaries. The subjects of these reports are to be as follows* :—

1. The investigation before a London police magistrate of a grave criminal charge, ending in committal for trial by jury. The attendance for this report may commence on the first remand ;† but in such case, the purport of the evidence taken before the first remand must be clearly and fully given in the report.

2. The whole business, of whatever kind, transacted in a London police court in any one day. (No separate summary required.)

3–4. Two important civil causes tried by a special jury in London or Westminster, or at Kingston.

Besides continuing the general study of the leading rules of evidence and procedure, as laid down in Pitt Taylor's Treatise, candidates will be required to master more particularly the provisions of the Indian Evidence Act (1872).‡

3. *Indian Law :*

All candidates must be thoroughly acquainted with the following works :—

The Indian Penal Code.
The Code of Civil Procedure.
The Code of Criminal Procedure (1872).
Hindu and Mahommedan Law.
The Indian Limitation Act, 1871.
The Indian Law of Contracts (1872).
Acts of the Government of India, No. 23 of 1861, and No. 9 of 1863.

III.—History and Geography of India.§

Candidates will be expected to show a general knowledge of Elphinstone's History of India, and to be well acquainted with the Geography of India. Under the head of History they will be examined more particularly in the following works :—

Mill's British India, chapters 8–13 of Book VI.
Wilson's continuation of Mill, chapter 1 of Book I., and 1–12 of Book II.
Marshman's History of India, chapters 8–38.

IV.—Political Economy.‖

Candidates will be examined more particularly in Mill's Political Economy ; but they must be prepared to answer questions referring,

---

* It is expected that candidates will, by their own inquiries, ascertain at what places and times they should attend for the purpose of taking their notes. In case of difficulty, however, application may be made to this office for such information as the Commissioners may be able to afford.

† The days of such remands may be ascertained by inquiry from the clerks of the several police courts.

‡ Candidates for the prize will be expected to have read Fitzjames Stephen's Digest of the Law of Evidence.

§ Candidates for the prize will be expected to have read not only the general histories of India, but also such special works as the histories of Orme and Grant Duff, and Kaye's Afghan War, and Life of Metcalfe.

‖ Candidates for the prize will be expected to have included in their reading the first 21 chapters, at least, of Ricardo's Political Economy, Northcote's History of Twenty Years of Financial Policy, and Göschen's Theory of Foreign Exchanges.

for the sake of illustration or comparison, to Adam Smith and McCulloch's Notes. Candidates of 1876.

N.B.—*Candidates are reminded that at this examination it will be decided whether they are qualified for the Civil Service of India, and that no Candidate can be regarded as qualified who is not found to have a competent knowledge of the several subjects above specified.* Final examination.

As the duties of civilians in India are such as often require the performance of journeys on horseback, candidates will be expected to produce before the time fixed for the final examination satisfactory evidence of their ability in this respect. Special instructions.

Prizes.

Prizes of the value set forth below will be offered for competition in the several subjects, and will be awarded according to the combined results of the general examination, and of a separate prize examination. The Civil Service Commissioners are only authorised to award these prizes on condition that a high standard of proficiency is attained.

	£
Law, one prize of	100
Sanskrit	75
Hindustani	50
Hindi	50
Bengali	50
Tamil	50
Telugu	50
Gujarati	50
Marathi	50
Arabic	50
Persian	50
History and Geography of India	50
Political Economy	50

Candidates of 1877. Second periodical examination. Special instructions.

SPECIAL INSTRUCTIONS TO THE CANDIDATES SELECTED IN 1877, WITH REGARD TO THEIR SECOND PERIODICAL EXAMINATION, COMMENCING ON TUESDAY THE 16TH OF JULY 1878.

N.B.—*In each subject candidates must be prepared to answer questions referring, for the sake of illustration or comparison, to the books prescribed for the first Examination.*

18th January 1878.

I.—LANGUAGES.

Candidates will be examined in the grammar of the vernacular languages which they respectively take up, and in the under-mentioned text-books. Passages will be set from the text-books for translation into English, and for re-translation into the original, as well as a simple narrative passage from some English book for translation. An extract will also be given from some easy native book other than the text-book.

Special value will be attached to correct and idiomatic writing of the vernacular languages. Candidates are recommended to practise as much as possible re-translating into the original languages passages translated from the text-books. Marks will also be given for correct pronunciation of the native sounds.

Attention is drawn to the importance of writing the Oriental languages well and correctly. Candidates will be liable to lose marks who neglect to acquire a proficiency in writing the native character.

Hindustani.—Bágh-o-Bahár, pp. 10–100.

Telugu.—Brown's Grammar; especially Books 2 to 7.
Arden's Grammar, to the end of Part II.
Brown's Reader, pp. 38–108.

Candidates who take the under-mentioned languages should read the following works:—

Hindi.—Hindî Reader, pp. 12–56.
Robinson Crusoe, pp. 70–126.

Bengali.—Naba Nárí, pp. 1–90.

Tamil.—Pope's Handbook, pp. 7–15, 23–125, 174–196, and 202–206.
Pope's Reader, pp. 50–104.
Rhenius' Grammar, 3rd edition, pp. 76–186.

Marathi.—Fifth Reading Book (edition of 1870), pp. 31–79, 84–101.

Sanskrit.—The Grammar.
Story of Nala, Books 11–16.
Hitopade'sa, Book 1 (omitting introduction) to the commencement of Hiraṇyaka's Story of his own Life.

Arabic.—Alif Laila (Macnaghten); Vol. I., pp. 121–148.
Al Fachiri, pp. 35–55.

Persian.—Gulistán [Platts], cap. ii. and iii.
Anwári Suhailí (Hertford edition), pp. 120–134.

II.—LAW.

1. *General Jurisprudence.*—The books or portions of books to be studied are:—

Blackstone's Commentaries (Kerr's edition), Book I., cap. ix.–xviii.; or, if Kerr's edition cannot be procured, the following portions of

N.B.—Where pages, &c. are specified, the numbers are to be taken *inclusively*.

Stephen's Commentaries :—Book III., Book IV., Part 1. cap. ii., and cap. viii. to end; Part 2, cap. i.; and Part 3, cap. i. Candidates of 1877.

Justinian's Institutes (Sandars's edition), Book I. and Book II. to Tit. ix., section 6, with the Editor's Introduction. Second periodical examination.

Maine's Ancient Law, chapters i.–v. Special instructions.

2. *Notes of Cases and Law of Evidence.*—Not fewer than seven reports* must be supplied by each candidate, drawn up as required by the "General Instructions," and consisting exclusively of cases decided in the Courts of Assize, in the Central Criminal Court, or in the Superior Courts of London, Edinburgh, and Dublin. Three of these reports must relate to civil actions, and four to criminal trials. No case should be taken in which the defendant or prisoner is unrepresented by counsel.

The Law of Evidence is to be studied more especially under the heads mentioned in the "General Instructions."

3. *Indian Law:—*

The Penal Code.
The Code of Criminal Procedure.
The Code of Civil Procedure.
Acts† of the Government of India, No. 23 of 1861, and No. 9 of 1863.

III.—History and Geography of India.

Elphinstone, from Book VI. to end.

The Map of India, with special reference to the prescribed portion of History.

Geography of India, by Duncan.

IV.—Political Economy.

M'Culloch's edition of Adam Smith's Wealth of Nations, 1863, Books III., IV., and V., with the Supplemental Notes and Dissertations as far as they relate to these books.

After the examination prizes will be given as follows:—

			£
For the greatest proficiency in		Law (Jurisprudence) - -	10
Ditto	ditto	Law (Notes of Cases, &c.) -	10
Ditto	ditto	Law (Indian) - - -	10
Ditto	ditto	Hindustani - - -	10
Ditto	ditto	Hindi - - - -	10
Ditto	ditto	Bengali - - -	10
Ditto	ditto	Tamil - - -	10
Ditto	ditto	Telugu - - -	10
Ditto	ditto	Marathi - - -	10
Ditto	ditto	History and Geography of India - - -	10
Ditto	ditto	Political Economy - -	10
Ditto	ditto	Sanskrit - - -	10
Ditto	ditto	Arabic - - -	10
Ditto	ditto	Persian - - -	10

* Four of these reports must be sent in on or before March 20th, and the remainder on or before April 30th. They should be *legibly* written on half sheets of foolscap paper, on one side only.

† A copy of these Acts will be given to each candidate on application.

Candidates of 1877. Second periodical examination. Special instructions.

No prize will be awarded except for a respectable degree of proficiency; no candidate will receive a prize who does not exhibit satisfactory proficiency in each of the prescribed subjects; and no candidate will receive a prize in respect of any subject for which a prize was awarded to him at the last examination.

N.B.—No candidate who, in any of the prescribed subjects, shall fail to show satisfactory proficiency, will receive marks in respect of any additional language.

Candidates of 1877. Third periodical examination. Special instructions.

SPECIAL INSTRUCTIONS TO THE CANDIDATES SELECTED IN 1877, WITH REGARD TO THEIR THIRD PERIODICAL EXAMINATION, COMMENCING ON TUESDAY THE 10TH OF DECEMBER 1878.

1st August 1878.

N.B.—*In each subject candidates must be prepared to answer questions referring, for the sake of illustration or comparison, to the books prescribed for the previous Examination.*

I.—LANGUAGES.

Passages will be set from the text-books for translation into English, and for re-translation into the original, as well as a passage from some English book for translation. An extract will also be given from some native book other than the text-book, and questions will be asked on the Grammar.

Special value will be attached to correct and idiomatic writing of the vernacular languages. Candidates are recommended to practise as much as possible re-translating into the original languages passages translated from the text-books. Marks will also be given for correct pronunciation of the native sounds.

N.B.—No candidate who, in any of the prescribed subjects, shall fail to show satisfactory proficiency, will receive marks in respect of any additional language.

TEXT BOOKS.

Hindustani.—Bágh-o-Bahár, pp. 100–201.

Telugu.—Brown's or Arden's Grammar.
Brown's Reader, ch. ii., pp. 131–188.

Candidates who take the under-mentioned languages should read the following works:—

Hindi.—Reader, pp. 57–89.
Sakuntala, pp. 1–30.

Bengali.—Naba Nárí, pp. 106–204.

Marathi.—Fifth Reading Book (edition of 1870), pp. 115–156.
Lipidhárá, pp. 1–40.*

N.B.—Where pages, &c. are specified, the numbers are to be taken *inclusively*.
* Candidates will be expected to write the Modi character, as well as to read it.

Candidates of 1877. Third periodical examination. Special instructions.

Tamil.—Pope's Reader, pp. 104–167.
Rhenius' Grammar, pp. 43–75, 187–220.

Sanskrit.—Hitopade'sa, from the beginning of Hiraṇyaka's History in Book 1. to the end of the "Sandpiper and the Sea" in Book 2.

Arabic.—Alif Laila (Macnaghten's ed.), Vol. I., pp. 148–176.
El Fachiri, pp. 55–76.

Persian.—Gulistán [Platts], chapters IV., V., and VII., pp. 96–120, 126–144.
Anwári Suhailí, pp. 135–158.

II.—Law.

1. *General Jurisprudence.*—The books or portions of books to be studied are :—

Justinian's Institutes (Sandars's edition), from Tit. x. of Book II. to the end of Book IV.

Maine's Ancient Law, chapters vi.–x.

2. *Notes of Cases and Law of Evidence.*—Not fewer than six reports* must be supplied by each candidate, drawn up as required by the "General Instructions," and referring exclusively to cases of importance tried before juries in the Courts of Assize, in the Central Criminal Court, or in the Superior Courts of London, Edinburgh, and Dublin. Three of these reports must relate to civil actions, and three to criminal trials. The civil cases must consist entirely of actions tried before special juries. The criminal cases must be selected for some special quality, such as the gravity of the offence charged (*e.g.*, varieties of homicide, perjury, forgery, aggravated assaults, &c.), the nature of the evidence produced, the number of prisoners, &c.

No case should be taken in which either party is unrepresented by counsel.

Particular attention should be paid to clearness of language and method in the analytical summaries.

The Law of Evidence is to be studied in the manner indicated in the "General Instructions."

3. *Indian Law :—*
The Indian Penal Code.†
The Indian Law of Contracts (1872).‡
Hindu Law.§
Mahommedan Law.§

---

* Three of these reports must be sent in so as to reach the office of the Commission by October 10th, and the remainder by November 15th.

† Candidates are recommended to read the Indian Penal Code, illustrated by Mr. Mayne, or the work by Messrs. Morgan and Macpherson, of which the former may be obtained from Mr. Bain, 1, Haymarket, and the latter from Stevens and Son, 119, Chancery Lane, W.C.

‡ Copies will be given to candidates on application.

§ The Tagore Lectures on Indian Law (1870, 1871, 1872, and 1873) and Rumsey's Charts of Hindu and Mahommedan Inheritance may be consulted with advantage on the subjects to which they relate.

Candidates of 1877. Third periodical examination. Special instructions.

III.—History and Geography of India.

Mill's History of British India, edited by Wilson, vols. iii. and iv.
Marshman's History of India, chap. viii.–xviii.
The Map of India, and Thornton's Gazetteer (in one volume) with special reference to the prescribed portion of History.

IV.—Political Economy.

Principles of Political Economy, by J. S. Mill, Books I., II., and first 15 chapters of Book III.

After the examination prizes will be awarded as follows:—

			£
For the greatest proficiency in		Law (Jurisprudence) -	10
Ditto	ditto	Law (Notes of Cases, &c.) -	10
Ditto	ditto	Law (Indian) - - -	10
Ditto	ditto	Hindustani - - -	10
Ditto	ditto	Telugu - - -	10
Ditto	ditto	Hindi - - -	10
Ditto	ditto	Bengali - - -	10
Ditto	ditto	Tamil - - -	10
Ditto	ditto	Marathi - - -	10
Ditto	ditto	History and Geography of India - - -	10
Ditto	ditto	Political Economy - -	10
Ditto	ditto	Sanskrit - - -	10
Ditto	ditto	Arabic - - -	10
Ditto	ditto	Persian - - -	10

No prize will be given except for a respectable degree of proficiency; no candidate will receive a prize who does not exhibit satisfactory proficiency in each of the prescribed subjects; and no candidate will receive a prize in respect of any subject for which a prize was awarded to him at a previous examination.

Candidates of April 1878. General instructions.

General Instructions respecting the Periodical Examinations of the Candidates selected at Easter 1878.

May 1878.

It is necessary that the selected candidates should at once commence their special preparation. They will remember that they have been selected on the ground of superior proficiency in subjects which (with, perhaps, the exception of Arabic and Sanskrit) are included within the ordinary range of English education. The Civil Service Commissioners believe that no better presumptive evidence of fitness can be obtained; but it must rest with the candidates themselves to give more conclusive evidence, by showing aptitude in acquiring the special knowledge necessary for them in the positions which they hope to gain.

Candidates of April 1878. General instructions.

They must bear in mind that at the several examinations which they have to pass, the requirements of universities or colleges will not be regarded as affording any excuse for imperfect preparation; and further, that anyone who should accept the position of a selected candidate without the intention of using all diligence to qualify himself for the service, would be acting unfairly alike to the Government of India and to the candidate who might have been selected in his place.

The regulations relating to the periodical examinations to be undergone during the period of probation have already been communicated to every candidate. That there may be no misapprehension on the subject, a second copy of those regulations is herewith enclosed. After each examination, the half-yearly allowance* will be paid to those candidates who shall have passed to the satisfaction of the Commissioners. Deductions may be made from this allowance in the case of candidates whose examination is unsatisfactory, in proportion to the degree of their deficiency. After each examination prizes will be awarded.

The following instructions will suffice to indicate generally the course of study to be pursued in the several subjects, but special instructions with reference to the preparation required for each of the half-yearly examinations will be given at the proper time.

I.—Languages.

Every candidate will be required to study throughout the period of probation the chief vernacular language of his presidency, viz.:—

Hindustani,	if assigned to	- - - -	Bengal.
Telugu	„ „	- - - -	Madras.
Hindustani	„ „	- - - -	Bombay.

The final test of qualification in each of these languages will be as nearly as possible that which was formerly imposed on civil servants in India before they were appointed to active duties: it will include a sound knowledge of the grammar, facility in translating from and into the language, familiarity with the written character, and some proficiency in speaking the language.†

Every candidate will be required further to study, during the first year, one of the classical languages, viz.,—Sanskrit, Arabic, or Persian; and, during the second year, *either* one of the classical languages, *or* the second vernacular of his presidency, viz.:—

Bengali,	if assigned to	Bengal (Lower Provinces).
Hindi	„	Bengal (N.W. Provinces, &c.)
Tamil	„	Madras.
Marathi	„	Bombay.

In addition to the prescribed languages, candidates may take up, at any time, any of the classical languages above-named; and, during the second year, those who continue to study a classical language may take

---

* *i.e.*, 50*l.* after the 1st, 2nd, and 3rd, and 150*l.* after the final examination.

† Extract from 13th Report of the Civil Service Commissioners as to the necessity of acquiring a competent knowledge of the vernacular languages:—"We consider "that at the 'Final Examinations' no amount of proficiency in other subjects "should be accepted as compensating for deficiency in this essential qualification."

Candidates of April 1878. General Instructions.

up also the second vernacular of their respective presidencies. Proficiency in these additional languages will not be accepted as compensating for deficiency in those which are prescribed; and no candidate, who in any of the prescribed subjects shall fail to show satisfactory proficiency, will receive marks in respect of an additional language.

II.—Law.

Examinations will be held under the following heads :—

1. General Jurisprudence.
2. (A.) Proceedings in English Courts of Justice;
   (B.) Law of Evidence.
3. Laws of India.

1. Under the head of *General Jurisprudence* candidates will be expected to have mastered the contents of the following books, or such portions of them as may be indicated by special instructions :—

Blackstone's Commentaries, edited by R. M. Kerr, LL.D., Vol. I. (containing the "Introduction" and the "Rights of Persons").
Austin's Jurisprudence, Vol. I.
The Institutes of Justinian, edited by Sandars.
Maine's Ancient Law.
Studies in Roman Law, with comparative views of the Laws of France, England, and Scotland. By Lord Mackenzie.
Bentham's Theory of Legislation. By Dumont.

2. (A.) *Proceedings in English Courts of Justice.*—Every candidate is required to send in, at such times as may be named in the special instructions, reports of a specified number of cases heard by himself in courts of justice,* in accordance with the regulations set forth below. Should, however, the set of reports sent in by a candidate in any halt year fall below a reasonable standard, either in the choice of subject-matter or in the manner of treating it, or should the *vivâ voce* examination show that no sufficient knowledge of the meaning and conduct of the proceedings reported has been gained, the candidate may be required to attend and report a further number of cases from such courts as the Civil Service Commissioners may prescribe.

The object aimed at in this course of reporting is, that the candidate should acquire clear ideas as to the conduct of a judicial inquiry into such facts as form the ordinary staple of business in the civil and criminal courts of this country, and some familiarity with the principles on which the rules of evidence and procedure enforced in those courts are founded. Candidates will, therefore, do well to avoid (for the first year at least) cases involving abstruse legal questions or difficult technicalities.

Candidates are advised, before commencing their attendance in court, to read either in Blackstone's Commentaries, or in some other elementary work, an account of the proceedings in a civil action and a criminal trial; and they are required to attend to the following points in the preparation, &c. of the reports :—

(*a.*) Each report should contain the title of the court, the names of the judge and the parties, the time and place of trial, and the

---

* The Commissioners will, if applied to, endeavour to facilitate the admission of candidates to those courts of justice in which any special arrangement for their accommodation can be made.

matter of the charge, cause of action, &c. The reports should state, fully and methodically, the substance of the evidence given (reporting it in the first person, and marking whether it was elicited in chief, cross, or re-examination)—the objections made to evidence, whether oral or documentary—the points, if any, on which a conflict of evidence has arisen—the arguments of counsel—the view taken by the judge—and the ultimate result; besides noting the course of procedure, and any other details which may appear worthy of observation.

Candidates of April 1878. General instructions.

(*b.*) The candidate is to underline, in the body of his report, such portions of the evidence as appear to him specially cogent and material, and to state in the margin opposite, in the shortest possible note, the reason why.

(*c.*) In addition to the more extended report, a very short analytical statement of each case is to be given, showing, in criminal cases, the facts necessary to constitute the offence charged, and in civil cases, the exact points in issue, with the bearing of the evidence upon them. In working out this summary, clearness and precision should be steadily kept in view.

(*d.*) Each candidate is to append to his reports a declaration that they have been obtained by his personal attendance in court, and are *bonâ fide* his own composition, without revision or help given by another person or derived from another report.

(*e.*) The reports are to be written on detached sheets of *white* foolscap paper of the ordinary size. One side only of the paper is to be used; and attention must be paid to handwriting, which should be clear and large.

(B.) *Law of Evidence.*—Candidates will be expected to master the principles of the Law of Evidence as laid down in the Indian Evidence Act, and in Sir J. F. Stephen's "Digest of the Law of Evidence" (Macmillan), 1876. They will also be expected to refer, for the purpose of illustrating and applying the principles of the Law of Evidence, to the reported cases mentioned in Sir J. F. Stephen's book. The reports will be found in any law library, but in case they should not be accessible, such parts of the treatises of Taylor, Best, or Goodeve as illustrate the principles of the Law of Evidence should be read with care. The questions at the first examination will be of an elementary character, but at each succeeding examination candidates will be expected to show a more extended knowledge of the subject and of its illustrations.

At each Periodical Examination a paper will be set, and *vivâ voce* questions will be asked, to test both the familiarity of the candidates with the Law of Evidence as limited above, and the practical knowledge which they have gained by following the procedure of courts of justice in their course of reporting.

3. The examination in the *Laws of India* will include papers and *vivâ voce* examination in the following branches :—

(*a.*) The Code of Civil Procedure.
(*b.*) The Indian Penal Code.
(*c.*) The Code of Criminal Procedure, 1872.
(*d.*) The Indian Law of Contracts, 1872.
(*e.*) Hindu Law.
(*f.*) Mahommedan Law.

Candidates of April 1878. General instructions.

III.—History and Geography of India.

The following books may be studied with advantage :—

Elphinstone's History of India.
Marshman's History of India.
Mill's History of British India, edited and continued by Professor Wilson.
Kaye's Afghan War.
Kaye's Life of Lord Metcalfe.
Maine's Village Communities.
Geography of India (Allen's series or Duncan's).
Thornton's Gazetteer.

IV.—Political Economy.

The works recommended are :—

M'Culloch's 'edition of Adam Smith's Wealth of Nations, last edition (1863).
J. S. Mill's Principles of Political Economy.
Ricardo's Political Economy.
Northcote's Twenty Years of Financial Policy.
Göschen on Foreign Exchanges.

As the duties of civilians in India are such as often require the performance of journeys on horseback, candidates will be expected to produce, before the time fixed for the final examination, satisfactory evidence of their ability in this respect.

Candidates are requested to acknowledge at once all communications from this office, and to inform the Secretary of any change in their adaress.

Civil Service Commission,
Westminster, S.W.

Candidates of April 1878. First periodical examination. Special instructions.

Special Instructions to the Candidates selected at Easter 1878, with regard to their First Periodical Examination, commencing on the 31st of December 1878.

Civil Service Commission.

I.—Languages.

Candidates will be expected to have studied the grammar of the vernacular languages in which they are to be examined, to be able to translate portions of some simple text-book in each language, and to translate into it a few simple sentences of English. Passages translated from the text-book will also be set for re-translation.

Care should be taken to acquire from the first, as far as possible, a correct pronunciation of the native sounds.

In all Examinations in the vernacular languages special value will be attached to correct and idiomatic writing of the language. Candidates are recommended to practise as much as possible re-translating into the original languages passages translated from the text-books.

Candidates of April 1878. First periodical examination. Special instructions.

In the prescribed languages the books on which candidates will be examined are :—

Hindustani.—Platts' or Williams' Grammar.
Bágh-o-Bahár, pp. 10–69.

Telugu.—Brown's or Arden's Grammar.
Brown's Reader, pp. 5–33.

Sanskrit.—The Grammar ; more especially the rules of Sandhi, the regular declensions of the nouns, the pronouns, and the common verbs, as far as the four conjugational tenses, the reduplicated perfect, and the two futures, in the Parasmaipada and Átmanepada.
The Story of Nala, Books 1–8.

Arabic.—The Grammar. (Wright, Palmer, or Forbes.)
Selections. (Forbes or Schalch.)
Alif Laila (Macnaghten's edition), Vol. I., pp. 101–112.

Persian.—The Grammar. (Lee's Edition of Sir W. Jones, Forbes, or Mirza Ibrahim.)
Selections. (Forbes.)
Gulistán, [Platts], cap. i., pp. 13–24.

II.—Law.

1. *General Jurisprudence.*—The books or portions of books to be studied are :—

Blackstone's Commentaries (Kerr's edition), from the beginning of section ii. of the Introduction to the end of chapter viii., Book I. ; or, if Kerr's edition cannot be procured, the following portions of Stephen's Commentaries :—Sections 2, 3, and 4 of the Introduction, Book I., and the first seven chapters of the First Part of Book IV.

Austin's Lectures, I., V., and VI.

2. *Notes of Cases and Law of Evidence.*—Not fewer than nine reports* must be supplied by each candidate, drawn up as required by the "General Instructions,"† and consisting exclusively of cases decided by a single judge or magistrate without the aid of a jury. Three of these reports must relate to civil cases decided by the judge of a county court (or, in Scotland, of a sheriff's court) where both parties are represented by counsel or attorney. Five must relate to proceedings in the police courts of London, Edinburgh, or Dublin, presided over by stipendiary magistrates, embracing—

(*a.*) Cases in which the magistrate exercises final jurisdiction.

(*b.*) Cases in which the magistrate commits for trial by a jury.

One must consist of a separate report of the whole of the business, of whatever kind, transacted in a police court during any one day.

N.B.—Where pages, &c. are specified, the numbers are to be taken *inclusively*.

* Five of these (including at least one report of a county court case, and at least one of a police court case) must be sent in before July 31st. The remainder (including the Report of the business of a day in a police court) must be sent in before November 23rd.

† Candidates will be allowed to inspect, at the office of the Civil Service Commission, specimens of reports drawn up in the manner desired.

Candidates of April 1878. First periodical examination. Special instructions.

The *Law of Evidence* is to be studied in the manner indicated in the "General Instructions."

3. *Indian Law* :—

The Penal Code.*
The Code of Criminal Procedure.†

III.—History and Geography of India.

Elphinstone (Cowell's edition), Books I.–IV., with Appendix.
The Map of India.
Geography of India (Allen's series or Duncan's).

IV.—Political Economy.

M'Culloch's edition of Adam Smith's Wealth of Nations, 1863. Introductory Discourse, and Books I. and II. (with the Supplemental Notes and Dissertations as far as they relate to those books), omitting the Digression concerning variations in the value of Silver, Book I., cap. xi., pt. 3, and the account of the Scotch Banking System in the latter portion of cap. ii., Book II.

After the examination prizes will be awarded as follows :—

			£
For the greatest proficiency in		Law (Jurisprudence) - -	10
Ditto	ditto	Law (Notes of Cases, &c.) -	10
Ditto	ditto	Law (Indian) - - -	10
Ditto	ditto	Hindustani - - -	10
Ditto	ditto	Telugu - - -	10
Ditto	ditto	Sanskrit - - -	10
Ditto	ditto	Arabic - - -	10
Ditto	ditto	Persian - - -	10
Ditto	ditto	History and Geography of India - - -	10
Ditto	ditto	Political Economy - -	10

No prize will be given except for a respectable degree of proficiency; and no candidate will receive a prize who does not exhibit satisfactory proficiency in each of the prescribed subjects.

---

* Candidates are recommended to read the Indian Penal Code, illustrated by Mr. Mayne, or the work by Messrs. Morgan and Macpherson, of which the former may be obtained from Mr. Bain, 1, Haymarket, and the latter from Stevens and Son, 119, Chancery Lane, W.C.

† Copies will be given to candidates on application.

General Instructions respecting the periodical Examinations of the Candidates selected at the Open Competition of Midsummer 1878.

Candidates of July 1878. General instructions.

September 1878.

It is necessary that the selected candidates should at once commence their special preparation. They will remember that they have been selected on the ground of superior proficiency in subjects which (with, perhaps, the exception of Arabic and Sanskrit) are included within the ordinary range of English education. The Civil Service Commissioners believe that no better presumptive evidence of fitness can be obtained; but it must rest with the candidates themselves to give more conclusive evidence, by showing aptitude in acquiring the special knowledge necessary for them in the positions which they hope to gain. They must bear in mind that at the several examinations which they have to pass, the requirements of universities or colleges will not be regarded as affording any excuse for imperfect preparation; and further, that anyone who should accept the position of a selected candidate without the intention of using all diligence to qualify himself for the service, would be acting unfairly alike to the Government of India and to the candidate who might have been selected in his place.

The regulations relating to the periodical examinations to be undergone during the period of probation have already been communicated to every candidate. That there may be no misapprehension on the subject, a second copy of those regulations is herewith enclosed. The allowance of 150*l*. a year to those candidates "who pass their probation "at some university to be approved beforehand by the Secretary of "State,"* will be payable in two moieties, one after each of the half-yearly examinations.† After the final examination prizes will be awarded.

The following instructions will suffice to indicate generally the course of study to be pursued in the several subjects, but special instructions with reference to the preparation required for each of the periodical examinations will be given at the proper time.

I.—Languages.

Every candidate will be required to study throughout the period of probation the chief vernacular language of his presidency, viz.:—

Hindustani, if assigned to	-	-	Bengal.
Telugu	„	-	Madras.
Hindustani	„	-	Bombay.

The final test of qualification in each of these languages will be as nearly as possible that which was formerly imposed on civil servants in India before they were appointed to active duties: it will include a sound knowledge of the grammar, facility in translating from and into the language, familiarity with the written character, and some proficiency in speaking the language.‡

---

* The Commissioners have been informed that the following universities are approved by the Secretary of State, viz., Oxford, Cambridge, Dublin (Trinity College), Glasgow, Edinburgh, Aberdeen, St. Andrew's.

† Extract from a letter from the India Office:—"It should, however, be distinctly "understood that, in the event of a candidate voluntarily withdrawing himself "before or after passing his final examination, or failing to proceed to India within "the allotted time after passing his final examination, he or his surety will be called "upon to refund the amount which he has received from this office."

‡ Extract from 13th Report of the Civil Service Commissioners as to the necessity of acquiring a competent knowledge of the vernacular languages:—"We consider "that at the 'Final Examinations' no amount of proficiency in other subjects "should be accepted as compensating for deficiency in this essential qualification."

Candidates of July 1878. General instructions.

Every candidate will be required further to study, during the first year, one of the classical languages, viz., Sanskrit, Arabic, or Persian ; and, during the second year, *either* one of the classical languages, *or* the second vernacular of his presidency, viz. :—

Bengali,	if assigned to	Bengal (Lower Provinces).
Hindi	,,	Bengal (N.W. Provinces, &c.)
Tamil	,,	Madras.
Marathi	,,	Bombay.

In addition to the prescribed languages, candidates may take up, at any time, any of the classical languages above named ; and, during the second year, those who continue to study a classical language may take up also the second vernacular of their respective presidencies. Proficiency in these additional languages will not be accepted as compensating for deficiency in those which are prescribed; and no candidate who in any of the prescribed subjects shall fail to show satisfactory proficiency will receive marks in respect of an additional language.

II.—Law.

Examinations will be held under the following heads :—

1. General Jurisprudence.
2. (A.) Proceedings in English Courts of Justice.
   (B.) Law of Evidence.
3. Laws of India.

1. Under the head of *General Jurisprudence* candidates will be expected to have mastered the contents of the following books, or such portions of them as may be indicated by special instructions :—

Blackstone's Commentaries, edited by R. M. Kerr, LL.D., Vol. I. (containing the "Introduction" and the "Rights of Persons").

Austin's Jurisprudence, Vol. I.

The Institutes of Justinian, edited by Sandars.

Maine's Ancient Law.

Studies in Roman Law, with comparative views of the Laws of France, England, and Scotland. By Lord Mackenzie.

Bentham's Theory of Legislation. By Dumont.

2. (A.) *Proceedings in English Courts of Justice.*—Every candidate is required to send in, at such times as may be named in the special instructions, reports of a specified number of cases heard by himself in courts of justice,* in accordance with the regulations set forth below. Should, however, the set of reports sent in by a candidate in any half year fall below a reasonable standard, either in the choice of subject-matter or in the manner of treating it, or should the *viva voce* examination show that no sufficient knowledge of the meaning and conduct of the proceedings reported has been gained, the candidate may be required to attend and report a further number of cases from such courts as the Civil Service Commissioners may prescribe.

The object aimed at in this course of reporting is, that the candidate should acquire clear ideas as to the conduct of a judicial inquiry into such facts as form the ordinary staple of business in the civil and criminal courts of this country, and some familiarity with the principles on which the rules of evidence and procedure enforced in those courts are founded. Candidates will, therefore, do well to avoid (for the first year at least) cases involving abstruse legal questions or difficult technicalities.

Candidates are advised, before commencing their attendance in court,

* The Commissioners will, if applied to, endeavour to facilitate the admission of candidates to those courts of justice in which any special arrangement for their accommodation can be made.

Candidates of July 1878. General instructions.

to read either in Blackstone's Commentaries, or in some other elementary work, an account of the proceedings in a civil action and a criminal trial; and they are required to attend to the following points in the preparation, &c. of the reports:

(*a.*) Each report should contain the title of the court, the names of the judge and the parties, the time and place of trial, and the matter of the charge, cause of action, &c. The reports should state, fully and methodically, the substance of the evidence given (reporting it in the first person, and marking whether it was elicited in chief, cross, or re-examination)—the objections made to evidence, whether oral or documentary—the points, if any, on which a conflict of evidence has arisen—the arguments of counsel—the view taken by the judge—and the ultimate result; besides noting the course of procedure, and any other details which may appear worthy of observation.

(*b.*) The candidate is to underline in the body of his report such portions of the evidence as appear to him specially cogent and material, and to state in the margin opposite, in the shortest possible note, the reason why.

(*c.*) In addition to the more extended report, a very short analytical statement of each case is to be given, showing, in criminal cases, the facts necessary to constitute the offence charged, and, in civil cases, the exact points in issue, with the bearing of the evidence upon them. In working out this summary, clearness and precision should be steadily kept in view.

(*d.*) Each candidate is to append to his reports a declaration that they have been obtained by his personal attendance in court, and are *bonâ fide* his own composition, without revision or help given by another person or derived from another report.

(*e.*) The reports are to be written on detached sheets of *white* foolscap paper of the ordinary size. One side only of the paper is to be used; and attention must be paid to handwriting, which should be clear and large.

(B.) *Law of Evidence.*—Candidates will be expected to master the principles of the Law of Evidence as laid down in the Indian Evidence Act, and in Sir J. F. Stephen's "Digest of the Law of Evidence" (Macmillan). They will also be expected to refer, for the purpose of illustrating and applying the principles of the Law of Evidence, to the reported cases mentioned in Sir J. F. Stephen's book. The reports will be found in any law library, but in case they should not be accessible, such parts of the treatises of Taylor, Best, or Goodeve as illustrate the principles of the Law of Evidence should be read with care. The questions at the first examination will be of an elementary character, but at each succeeding examination candidates will be expected to show a more extended knowledge of the subject and of its illustrations.

At each periodical examination a paper will be set, and *vivâ voce* questions will be asked, to test both the familiarity of the candidates with the Law of Evidence as limited above, and the practical knowledge which they have gained by following the procedure of courts of justice in their course of reporting.

3. The examination in the *Laws of India* will include papers and *vivâ voce* examination in the following branches:—

(*a.*) The Code of Civil Procedure.
(*b.*) The Indian Penal Code.
(*c.*) The Code of Criminal Procedure, 1873.
(*d.*) The Indian Law of Contracts, 1872.
(*e.*) Hindu Law.
(*f.*) Mahomedan Law.

Candidates of July 1878. General instructions.

III.—History and Geography of India.

The following books may be studied with advantage :—

Elphinstone's History of India.
Marshman's History of India.
Mill's History of British India, edited and continued by Professor Wilson.
Kaye's Afghan War.
Kaye's Life of Lord Metcalfe.
Maine's Village Communities.
Geography of India (Allen's series or Duncan's).
Thornton's Gazetteer.

IV.—Political Economy.

The works recommended are :—

M'Culloch's edition of Adam Smith's Wealth of Nations, last edition (1863).
J. S. Mill's Principles of Political Economy.
Ricardo's Political Economy.
Northcote's Twenty Years of Financial Policy.
Göschen on Foreign Exchanges.

V.—Natural Science.

Each candidate will be invited to name, some time before the final examination, the science in which he wishes to be examined, viz., Botany, Geology, or Zoology ; and at the same time to specify any portions of it to which he may have given particular attention.

As the duties of civilians in India are such as often require the performance of journeys on horseback, candidates will be expected to produce, before the time fixed for the final examination, satisfactory evidence of their ability in this respect.

Candidates are requested to acknowledge at once all communications from this office, and to inform the Secretary of any change in their address.

Civil Service Commission,
Westminster, S.W.

Candidates of July 1878. First periodical examination. Special instructions.

Special Instructions to the Candidates selected in July 1878, with regard to their First Periodical Examination, commencing on the 31st of December 1878.

2nd August 1878.

I.—Languages.

Candidates will be expected to have studied the grammar of the vernacular languages in which they are to be examined, to be able to translate portions of some simple text-book in each language, and to translate into it a few simple sentences of English. Passages translated from the text-book will also be set for re-translation.

Care should be taken to acquire from the first, as far as possible, a correct pronunciation of the native sounds.

In all examinations in the vernacular languages special value will be attached to correct and idiomatic writing of the language. Candidates are recommended to practise as much as possible re-translating into the original languages passages translated from the text-books.

In the prescribed languages the books on which candidates will be examined are :— Candidates of July 1878. First periodical examination. Special instructions.

Hindustani.—Platts' or Williams' Grammar.
Bágh-o-Bahár, pp. 10-69.

Telugu.—Brown's cr Arden's Grammar.
Brown's Reader, pp. 5–33.

Sanskrit.—The Grammar ; more especially the rules of Sandhi, the regular declensions of the nouns, the pronouns, and the common verbs, as far as the four conjugational tenses, the reduplicated perfect, and the two futures, in the Parasmaipada and Átmanepada.
The Story of Nala, Books 1–8.

Arabic.—The Grammar. (Wright, Palmer, or Forbes.)
Selections. (Forbes or Schalch.)
Alif Laila (Macnaghten's edition), Vol. I., pp. 101–112.

Persian.—The Grammar. (Lee's edition of Sir W. Jones, Forbes, or Mirza Ibrahim).
Selections. (Forbes.)
Gulistán [Platts], cap. i., pp. 13–24.

II.—Law.

1. *General Jurisprudence.*—The books or portions of books to be studied are :—

Blackstone's Commentaries (Kerr's edition), from the beginning of section ii. of the Introduction to the end of chapter viii., Book I. ; or, if Kerr's edition cannot be procured, the following portions of Stephen's Commentaries :—Sections 2, 3, and 4 of the Introduction, Book I., and the first seven chapters of the First Part of Book IV.

Austin's Lectures, I., V., and VI.

2. *Notes of Cases and Law of Evidence.*—Not fewer than nine reports* must be supplied by each candidate, drawn up as required by the "General Instructions,"† and consisting exclusively of cases decided by a single judge or magistrate without the aid of a jury. Three of these reports must relate to civil cases decided by the judge of a county court (or, in Scotland, of a sheriff's court) where both parties are represented by counsel or attorney. Five must relate to proceedings in the police courts of London, Edinburgh, or Dublin, presided over by stipendiary magistrates, embracing—(*a.*) Cases in which the magistrate exercises final jurisdiction ; (*b.*) Cases in which the magistrate commits for trial by a jury. One must consist of a separate report of the whole of the business, of whatever kind, transacted in a police court during any one day.

The *Law of Evidence* is to be studied in the manner indicated in the "General Instructions."

Indian Law :—
The Penal Code.‡
The Code of Criminal Procedure.§

N.B.—Where pages, &c. are specified, the numbers are to be taken *inclusively*.

* Five of these (including at least one report of county court case, and at least one of a police court case) must be sent in before October 31st. The remainder (including the report of the business of a day in a police court) must be sent in before November 30th.

† Candidates will be allowed to inspect, at the office of the Civil Service Commission, specimens of reports drawn up in the manner desired.

‡ Candidates are recommended to read the Indian Penal Code, illustrated by Mr. Mayne, or the work by Messrs. Morgan & Macpherson, of which the former may be obtained from Mr. Bain, 1, Haymarket, and the latter from Stevens & Son, 119, Chancery Lane, W.C.

§ Copies will be given to candidates on application.

Candidates of July 1878. First periodical examination. Special instructions.

III.—History and Geography of India.

Elphinstone (Cowell's edition), Books I.–IV., with Appendix.
The Map of India.
Geography of India (Allen's series or Duncan's).

IV.—Political Economy.

M'Culloch's edition of Adam Smith's Wealth of Nations, 1863. Introductory Discourse, and Books I. and II. (with the Supplemental Notes and Dissertations as far as they relate to those books), omitting the Digression concerning variations in the value of Silver, Book I., cap. xi., pt. 3, and the account of the Scotch Banking System in the latter portion of cap ii., Book II.

Open Competition, April 1878.

Regulations.

2.—REGULATIONS FOR THE OPEN COMPETITION OF EASTER 1878, FOR THE CIVIL SERVICE OF INDIA.

N.B.—The Regulations are applicable to this Examination only.

1. On April 9th, 1878, and following days, an examination of candidates will be held in London. At this examination not fewer than candidates will be selected, if so many shall be found duly qualified. Of these, will be selected for the Presidency of Bengal, [for the Upper Provinces, and for the Lower Provinces,] for that of Madras, and for that of Bombay.*—Notice will hereafter be given of the days and place of examination.

2. Any person desirous of competing at this examination must produce to the Civil Service Commissioners, before the 1st of February 1878, evidence showing:—

(*a.*) That he is a natural-born subject of Her Majesty.

(*b.*) That his age, on the 1st March 1878, will be above 17 years and under 21 years. [*N.B.—In the case of Natives of India this must be certified by the Government of India, or of the Presidency or Province in which the Candidate may have resided.*]

(*c.*) That he has no disease, constitutional affection, or bodily infirmity unfitting him, or likely to unfit him, for the Civil Service of India.†

(*d.*) That he is of good moral character.

He must also pay such fee as the Secretary of State for India may prescribe.‡

3. Should the evidence upon the above points be *primâ facie* satisfactory to the Civil Service Commissioners, the candidate will, upon payment of the prescribed fee, be admitted to the examination. The Commissioners may, however, in their discretion, at any time prior to the grant of the certificate of qualification herein-after referred to, institute such further inquiries as they may deem necessary; and if the result of such inquiries, in the case of any candidate, should be unsatisfactory to them in any of the above respects, he will be ineligible for admission to the Civil Service of India, and if already selected, will be removed from the position of a probationer.

4. The examination will take place only in the following branches of knowledge:—

	Marks.
English Composition - - - - - -	500
History of England—including that of the Laws and Constitution	500
English Language and Literature - - - -	500
Language, Literature, and History of Greece - - -	750
" " " Rome - - -	750
" " " France - - -	375
" " " Germany - - -	375
" " " Italy - - -	375
Mathematics (pure and mixed) - - - - -	1,250

---

* The number of appointments to be made, and the number in each Presidency, &c., will be announced hereafter. It will probably be about half the usual number. (*See Notice*, p. 329.)

† Evidence of health and character must bear date not earlier than the 1st January 1878.

‡ The fee for this examination will be 5*l.*, payable by means of a special stamp according to instructions which will be communicated to candidates.

	Marks.
Natural Science: that is (1) Chemistry, including Heat; (2) Electricity and Magnetism; (3) Geology and Mineralogy; (4) Zoology; (5) Botany - - - - -	1,000
*** The total (1,000) marks may be obtained by adequate proficiency in any two or more of the five branches of science included under this head.	
Moral Sciences: that is, Logic, Mental and Moral Philosophy -	500
Sanskrit Language and Literature - - - -	500
Arabic Language and Literature - - - -	500

Candidates are at liberty to name, before February 1st, 1878, any or all of these branches of knowledge. No subjects are *obligatory*.

5. The merit of the persons examined will be estimated by marks; and the number set opposite to each branch in the preceding regulation denotes the greatest number of marks that can be obtained in respect of it.

6. No candidate will be allowed any marks in respect of any subject of examination, unless he shall be considered to possess a *competent knowledge* of that subject.*

7. The examination will be conducted by means of printed questions and written answers, and by *vivâ voce* examination, as may be deemed necessary.

8. The marks obtained by each candidate, in respect of each of the subjects in which he shall have been examined, will be added up, and the names of the candidates who shall have obtained a greater aggregate number of marks than any of the remaining candidates will be set forth in order of merit, and such candidates shall be deemed to be selected candidates for the Civil Service of India, provided they appear to be in other respects duly qualified. Should any of the selected candidates become disqualified, the Secretary of State for India will determine whether the vacancy thus created shall be filled up or not. In the former case, the candidate next in order of merit and in other respects duly qualified, shall be deemed to be a selected candidate. A selected candidate declining to accept the appointment which may be offered to him will be disqualified for any subsequent competition.

9. Selected candidates, before proceeding to India, will be on probation for two years, during which time they will be examined periodically, with a view of testing their progress in the following subjects:—†

	Marks.
1. Oriental Languages:	
Sanskrit - - - - -	500
Vernacular‡ Languages of India (each) -	400
2. The History and Geography of India -	350
3. Law - - - - - -	1,250
4. Political Economy - - - -	850

In these examinations, as in the open competition, the merit of the candidates examined will be estimated by marks, and the number set opposite to each subject denotes the greatest number of marks that can be obtained in respect of it at any one examination. The examination will be conducted by means of printed questions and written answers, and by *vivâ voce* examination, as may be deemed necessary. The last of these examinations will be held at the close of the second year of probation. and will be called the "final examination," at which it will be decided whether a selected candidate is qualified for the Civil Service of India.

10. Any candidate who, at any of the periodical examinations, shall appear to have wilfully neglected his studies, or to be physically incapacitated for pursuing the prescribed course of training, will be liable to have his name removed from the list of selected candidates.

11. The selected candidates who, at the final examination, shall be found to have a competent knowledge of the subjects specified in Regulation 9, and who shall have satisfied the Civil Service Commissioners of their eligibility in respect of age, health, and character, shall be certified by the said Commissioners to be entitled to be appointed to the Civil Service of India, provided they shall comply with the regulations in force, at the time, for that Service.

12. Applications from persons desirous to be admitted as candidates are to be addressed to the Secretary to the Civil Service Commissioners, London, S.W., from whom the proper form for the purpose may be obtained.

June 1877.

---

* "Nothing can be further from our wish than to hold out premiums for knowledge of wide "surface and of small depth. *We are of opinion that a candidate ought to be allowed no "credit at all for taking up a subject in which he is a mere smatterer.*"—Report of Committee of 1854. A deduction of marks will be made under each subject, *including Mathematics.*

† Full instructions as to the course of study to be pursued will be issued to the successful candidates as soon as possible after the result of the open competition is declared.

‡ Including, besides the languages prescribed for the several presidencies, such other languages as may, with the approval of the Commissioners, be taken up as subjects of examination.

OPEN COMPETITION, April 1878

Regulations.

The Civil Service Commissioners are authorised by the Secretary of State for India in Council to make the following announcements :

(1.) *Selected candidates will be permitted to choose,* according to the order in which they stand in the list resulting from the open competition as long as a choice remains, the Presidency (and in Bengal the division of the Presidency) to which they shall be appointed, but this choice will be subject to a different arrangement should the Secretary of State or Government of India deem it necessary.*

(2.) *No candidate will be permitted to proceed to India before he shall have passed the final examination, and received a certificate of qualification from the Civil Service Commissioners, or after he shall have attained the age of twenty-four years.*

(3.) *The seniority in the Civil Service of India of the selected candidates shall be determined according to the order in which they stand on the list resulting from the final examination.*

(4.) *It is the intention of the Secretary of State to allow the sum of* 50*l. after each of the three first half years of probation, and* 150*l. after the last half year, to each selected candidate who shall have passed the required examinations to the satisfaction of the Commissioners, and shall have complied with such rules as may be laid down for the guidance of selected candidates.*

(5.) *All selected candidates will be required, after having passed the second periodical examination, to attend at the India Office for the purpose of entering into an agreement binding themselves, amongst other things, to refund in certain cases the amount of their allowance in the event of their failing to proceed to India. For a candidate under age a surety will be required.*

(6.) *After passing the final examination, each candidate will be required to attend again at the India Office, with the view of entering into covenants. The stamps payable on these documents amount to* 1*l.*

(7.) *Candidates rejected at the final examination of* 1880 *will in no case be allowed to present themselves for re-examination.*

Arrangements.

ARRANGEMENTS FOR THE OPEN COMPETITION OF APRIL 1878.

NOTICES.

1. This paper should be carefully preserved, and produced when required during the course of the examination.
2. It is requested that the candidate will acknowledge the receipt of this paper by writing his name on the outside of the enclosed envelope, and returning it through the post.
3. It is requested that any candidate intending to withdraw will give early notice of such intention, and return this paper.
4. On the first day of the examination, candidates will be required to state on a form which will be placed before them their addresses during the examination, and they are requested thereafter to keep the Commissioners informed of all changes in their address until they have received the announcement of the result of the examination.
5. The result of the examination will be communicated by letter to each candidate, probably before the end of May. The successful candidates will be required to attend in London, *immediately after this announcement*, for the purpose of being medically examined, of exercising their choice of presidency, and of receiving instructions as to the special studies to be pursued during their two years of probation.

---

6. Candidates will be required to leave their hats, overcoats, umbrellas, and any books or papers which they may have brought with them in the room provided for this purpose, before proceeding to the examination room.

---

§ This choice must be exercised immediately after the result of the open competition is announced, such day as may be fixed by the Civil Service Commissioners.

OPEN COMPETITION, April 1878.

Arrangements.

7. The examination on paper will in each case begin at the hour indicated in the following time table, but the door of the examination room will be kept open for holf an hour afterwards, in order that candidates may not suffer from accidental delays. Candidates arriving after the expiration of that half hour will not be admitted.
8. No candidate will be allowed to quit the examination room on any day until the expiration of half an hour from the time fixed for the commencement of the examination.
9. The number in the margin (and *not* the name of the candidate) must be placed outside each book sent in to the Examiners.
10. No candidate who has left the examination room during the hours assigned to paper work will be permitted to return to the paper which he has quitted.
11. Candidates wishing for explanation of the meaning of any of the questions before them may apply to the Examiners. With this exception, perfect silence is to be preserved in the examination room; and any candidate guilty of disorderly or improper conduct will be liable to be excluded from the examination.
12. Any candidate detected in the use of a book or manuscript brought with him for his assistance, or in copying from the papers of any other candidate, or in giving or receiving assistance of any description, will be regarded as disqualified, and his name will be removed from the List.

N.B.—At this examination 13 candidates will be selected, if so many shall be found duly qualified. Of these, 8 will be selected for the Presidency of Bengal (5 for the Upper Provinces, and 3 for the Lower Provinces), 2 for the Presidency of Bombay, and 3 for the Presidency of Madras.

Civil Service Commission,
Cannon Row, London, S.W.,
March 1878.

TIME TABLE OF THE EXAMINATION ON PAPER.

To be held at the University of London, Burlington Gardens. Old Bond Street.

Day.	Hour.	Subject.
Tuesday, 9th April, from - -	10 A.M. *to* 1 P.M.	English Composition.
	2 P.M. *to* 5 P.M.	English History.
Wednesday, 10th April	10 A.M. *to* 1 P.M.	English Composition.
	2 P.M. *to* 5 P.M.	English Language and Literature.
Thursday, 11th April	10 A.M. *to* 1 P.M.	Translation from Latin.
	2 P.M. *to* 5 P.M.	Translation into Latin.
Friday, 12th April -	10 A.M. *to* 1 P.M.	Roman History, &c.
	2 P.M. *to* 5 P.M.	Translation from Greek.
Saturday, 13th April	10 A.M. *to* 1 P.M.	Translation into Greek.
	2 P.M. *to* 5 P.M.	Greek History, &c.
Monday, 15th April -	10 A.M. *to* 1 P.M. 2 P.M. *to* 5 P.M.	Pure Mathematics.
Tuesday, 16th April -	10 A.M. *to* 1 P.M.	Pure Mathematics.
	2 P.M. *to* 5 P.M.	Mixed Mathematics.

OPEN COMPETITION, April 1878.

Arrangements.

Day.	Hour.	Subject.
Wednesday, 17*th April*	10 A.M. *to* 1 P.M. 2 P.M. *to* 5 P.M.	Mixed Mathematics.
Thursday, 18*th April*	10 A.M. *to* 1 P.M. 2 P.M. *to* 5 P.M.	French Language, &c.
Monday, 22*nd April* -	10 A.M. *to* 1 P.M. 2 P.M. *to* 5 P.M.	Moral Sciences.
Tuesday, 23*rd April* -	10 A.M. *to* 1 P.M. 2 P.M. *to* 5 P.M.	German Language, &c. Zoology.
Wednesday, 24*th April*	10 A.M. *to* 1 P.M. 2 P.M. *to* 5 P.M.	Italian Language, &c. Electricity and Magnetism.
Thursday, 25*th April*	10 A.M. *to* 1 P.M. 2 P.M. *to* 5 P.M.	Geology and Mineralogy.
Friday, 26*th April* -	10 A.M. *to* 1 P.M. 2 P.M. *to* 5 P.M.	Chemistry.
Monday, 29*th April* -	10 A.M. *to* 1 P.M. 2 P.M. *to* 5 P.M.	Botany. Sanskrit.

TABLE OF MARKS.—OPEN COMPETITION OF APRIL 1878 FOR THE CIVIL SERVICE OF INDIA.

NOTE.—The following extract from the Tenth Report of the Civil Service Commissioners refers to a change in the mode of assigning marks:—"It has already "been mentioned as one of the ruling principles of these examinations that no can- "didate should be allowed any credit at all for taking up a subject in which he is a "mere smatterer. Hitherto we have thought it enough, in conformity with this "principle, to strike out all marks which indicated less than a competent knowledge "of the subject selected; leaving those whose knowledge exceeded, by ever so "little, the minimum of competence, to count all the marks assigned to them. We "are of opinion, however, that superficial study may be more effectually discouraged "by allowing no credit for slight knowledge even to those candidates who succeed "in passing beyond it. We propose, therefore, that from the marks of all can- "didates alike a number answering to this slight knowledge shall be deducted; "but that it shall be possible, nevertheless, for any candidate who may show "remarkable proficiency in any subject to obtain the full number of marks allotted "to that subject."

On this occasion a deduction of 125 has been made from the marks assigned in each subject.

OPEN COMPETITION OF APRIL 1878.—TABLE OF MARKS.—SELECTED CANDIDATES.

Order of Merit.	No. in Examination.	Name.	Age on March 1st, 1878.	NUMBER OF MARKS OBTAINED.													
				Language and Literature of								Mathematics.	Natural Science.	Moral Science.	Sanskrit.	Arabic.	Total.
				England.			Greece.	Rome.	France.	Germany.	Italy.						
				Composition.	History.	Literature.											
				Maximum Number of Marks.													
				500	500	500	750	750	375	375	375	1,250	1,000	500	500	500	7,875
1	4	Holt; James Richard - - -	20	220	—	160	—	—	—	—	—	895	509	146	—	—	1,930
2	29	Bright; William Robert - - -	20	263	268	267	372	324	—	—	—	282	—	74	—	—	1,850
3	6	Inglis; Thomas - - - -	19	222	198	175	302	316	—	—	—	472	152	—	—	—	1,837
4	75	Thornton; Leslie Melville - - -	19	219	217	125	490	457	83	—	—	—	—	225	—	—	1,816
5	16	Kennedy; Thomas John - - -	20	234	331	261	302	264	48	—	—	233	24	—	—	—	1,697
6	36	Melitus; Paul Gregory - - -	20	137	231	165	357	344	106	—	136	—	—	164	—	—	1,640
7	70	Deeman; John - - - -	20	202	255	210	246	287	5	—	—	394	0	—	—	—	1,599
8	20	Moriarty; Arthur Stephen - - -	19	245	173	160	348	345	182	—	143	—	—	—	—	—	1,596
9	42	Phillips; Francis Angelo Theodore - -	20	251	92	197	455	417	84	—	98	—	—	0	—	—	1,594
10	5	Gleeson; Edward James Harry Ormond -	20	199	284	139	272	276	68	—	—	—	309	17	—	—	1,564
11	17	Moberly; Henry - - - -	20	181	225	182	—	81	—	172	—	403	318	—	—	—	1,562
12	52	Broadfoot; Ramsay Douglas - - -	20	160	274	178	—	138	136	—	—	333	337	—	—	—	1,556
13	8	Wedderburn; Francis Edward Keir - -	20	186	204	250	377	284	—	—	81	—	166	—	—	—	1,548

OPEN COMPETITION, April 1878.

OPEN COMPETITION OF APRIL 1878.—TABLE OF MARKS.—CANDIDATES NOT SELECTED.

Order of Merit.	No. in Examination.	NUMBER OF MARKS OBTAINED.													
		LANGUAGE AND LITERATURE OF								Mathematics.	Natural Science.	Moral Science.	Sanskrit.	Arabic.	Total.
		England.			Greece.	Rome.	France.	Germany.	Italy.						
		Composition.	History.	Literature.											
		Maximum Number of Marks.													
		500	500	500	750	750	875	375	375	1,250	1,000	500	500	500	7,375
14	56	106	—	125	139	132	—	—	—	782	250	—	—	—	1,534
15	34	198	143	227	166	212	—	—	—	539	—	—	—	—	1,485
16	11	237	298	349	—	171	130	—	—	—	146	144	—	—	1,475
17	66	55	67	86	395	327	—	—	—	513	—	—	—	—	1,443
18	19	174	77	187	291	305	83	184	115	—	—	24	—	—	1,440
19	13	107	129	—	365	312	54	138	—	319	—	—	—	—	1,424
20	65	208	291	181	277	232	113	—	—	118	—	—	—	—	1,420
21	40	187	213	115	337	301	121	—	133	—	—	0	—	—	1,407
22	59	150	195	172	—	—	—	—	—	629	81	151	—	—	1,378
23	10	162	131	234	—	—	—	—	—	454	2	53	310	—	1,346
24	7	212	190	—	—	160	—	—	—	514	128	138	—	—	1,342
25	23	167	—	0	117	133	—	194	—	713	—	—	—	—	1,324
26	43	177	245	188	—	104	117	130	—	357	0	—	—	—	1,321
27	30	242	142	77	366	316	—	—	—	—	83	137	—	—	1,313
28	74	210	148	91	282	185	157	—	192	—	—	—	—	—	1,265
29	25	128	201	133	366	255	—	—	—	142	0	19	—	—	1,244
30	55	148	150	103	—	—	—	—	—	767	71	—	—	—	1,239
31	46	68	198	186	—	—	—	—	—	402	107	50	222	—	1,233
32	18	188	169	220	292	197	—	—	—	—	87	60	—	—	1,213
33	53	87	220	110	286	211	127	—	143	—	—	0	—	—	1,184
34	57	115	186	190	256	235	84	—	—	—	64	—	—	—	1,130
35	37	199	104	35	402	217	—	—	—	161	—	—	—	—	1,118
36	12	285	261	166	—	94	—	—	—	289	1	—	—	—	1,096
37	64	121	121	159	143	205	112	—	143	—	—	47	—	—	1,051
38	60	150	207	111	225	235	—	—	—	—	19	29	—	—	976
39	38	118	151	127	—	201	—	101	—	250	16	—	—	—	964
40	32	142	215	204	72	129	6	—	—	87	71	—	—	—	926
41	33	91	193	129	—	13	63	—	—	270	158	—	—	—	917
42	47	148	43	105	351	249	—	—	18	—	—	0	—	—	914
43	51	117	142	144	308	179	—	—	—	—	2	—	—	—	892
44	28	114	154	186	—	—	—	—	—	209	209	—	—	—	872
45	26	165	70	92	269	230	—	—	—	—	—	0	—	—	826

Open Competition of April 1878.—Table of Marks.—Candidates not selected—*continued.*

Order of Merit.	No. in Examination.	NUMBER OF MARKS OBTAINED.													
		Language and Literature of								Mathematics.	Natural Science.	Moral Science.	Sanskrit.	Arabic.	Total.
		England.			Greece.	Rome.	France.	Germany.	Italy.						
		Composition.	History.	Literature.											
		Maximum Number of Marks.													
		500	500	500	750	750	375	375	375	1,250	1,000	500	500	500	7,875
46	9	182	0	55	252	216	0	—	104	—	—	—	—	—	809
47	72	81	10	72	—	8	—	—	—	393	180	—	—	—	774
48	39	142	88	78	—	83	—	—	—	346	30	—	—	—	767
49	50	89	93	92	—	—	—	—	—	107	0	143	243	—	717
50	71	175	155	101	55	42	—	185	—	—	—	—	—	—	713
51	22	110	104	34	184	190	54	—	—	—	32	—	—	—	708
52	76	124	49	37	214	148	126	—	—	—	—	0	—	—	698
53	68	157	8	97	189	235	—	—	—	—	—	—	—	—	686
54	67	185	64	86	90	136	24	—	0	—	—	20	—	—	605
55	69	117	182	76	140	51	36	—	—	—	0	—	—	—	602
56	21	36	—	—	—	—	—	—	—	461	52	—	—	—	549
57	41	128	150	11	98	118	—	—	—	—	—	2	—	—	507
58	1	144	90	74	50	69	—	—	—	0	8	—	—	—	435
59	45	102	115	0	—	—	0	—	—	—	—	0	171	—	388
60	35	141	0	126	—	46	—	—	—	11	51	—	—	—	375
61	63	101	58	78	6	53	19	31	—	—	—	0	—	—	346
62	15	98	165	25	—	—	0	—	—	—	9	0	—	—	297
63	44	0	—	—	—	—	0	209	—	67	—	—	—	—	276
64	61	144	87	7	—	—	—	—	—	25	11	—	—	—	274
65	27	2	100	36	—	0	—	125	—	0	0	0	—	—	263
66	31	72	0	96	25	32	0	—	—	19	—	—	—	—	243
67	49	71	—	61	4	0	—	—	—	0	0	39	—	—	175
68	48	0	0	0	—	—	57	0	0	—	0	—	—	—	57
69	2	0	0	—	—	0	—	—	—	—	0	—	—	—	0

OPEN COMPETITION, July 1878.

Regulations.

3.—REGULATIONS FOR THE OPEN COMPETITION OF JULY 1878 FOR THE CIVIL SERVICE OF INDIA.

N.B.—The Regulations are liable to be altered in future years.

1. On June 25th, 1878, and following days, an examination of candidates will be held in London. At this examination not fewer than candidates will be selected, if so many shall be found duly qualified. Of these, will be selected for Presidency of Bengal, [for the Upper Provinces, and for the Lower Provinces,] for that of Madras, and for that of Bombay.*— Notice will hereafter be given of the days and place of examination.

2. Any person desirous of competing at this examination must produce to the Civil Service Commissioners, before the 1st of May 1878, evidence showing :—

(*a.*) That he is a natural-born subject of Her Majesty.

(*b.*) That his age on the 1st of January 1878 will be above 17 years and under 19 years. [*N.B.—In the case of Natives of India this must be certified by the Government of India, or of the Presidency or Province in which the candidate may have resided.*]

(*c.*) That he has no disease, constitutional affection, or bodily infirmity unfitting him, or likely to unfit him, for the Civil Service of India.†

(*d.*) That he is of good moral character.†

He must also pay such fee as the Secretary of State for India may prescribe.‡

3. Should the evidence upon the above points be *primâ facie* satisfactory to the Civil Service Commissioners, the candidate will, upon payment of the prescribed fee, be admitted to the examination. The Commissioners may, however, in their discretion, at any time prior to the grant of the certificate of qualification hereinafter referred to, institute such further inquiries as they may deem necessary; and if the result of such inquiries, in the case of any candidate, should be unsatisfactory to them in any of the above respects, he will be ineligible for admission to the Civil Service of India, and if already selected, will be removed from the position of a probationer.

4. The examination will take place only in the following branches of knowledge:—

	Marks.
§English Composition	300
‖History of England—including a period selected by the candidate	300
‖English Literature—including books selected by the candidate	300
Greek	600
Latin	800
French	500
German	500
Italian	400
¶§Mathematics (pure and mixed)	1,000
Natural Science: that is, the elements of any two of the following Sciences, viz.:— Chemistry, 500; Electricity and Magnetism, 300; Experimental Laws of Heat and Light, 300; Mechanical Philosophy, with outlines of Astronomy, 300.	
Logic	300
Elements of Political Economy	300
**Sanskrit	500
**Arabic	500

---

* The number of appointments to be made, and the number in each Presidency, &c. will be announced hereafter. It will probably be about half the usual number. (*See Notice*, p. 337.)

† Evidence of health and character must bear date not earlier than the 1st April 1878.

‡ The fee for this examination will be 5*l.*, payable by means of a special stamp according to instructions which will be communicated to candidates.

§ Marks assigned in English Composition and Mathematics will be subject to no deduction.

‖ A considerable portion of the marks for English History and Literature will be allotted to the work specially prepared. In awarding marks for this, regard will be had partly to the extent and importance of the periods or books selected, and partly to the thoroughness with which they have been studied.

¶ The examination will range from Arithmetic, Algebra, and Elementary Geometry up to the elements of the differential and integral calculus, including the lower portions of applied Mathematics.

** The standard of marking in Sanskrit and Arabic will be determined with reference to a high degree of proficiency, such as may be expected to be reached by a Native of good education.

Candidates are at liberty to name, before May 1st, 1878, any or all of these branches of knowledge. No subjects are obligatory.

5. The merit of the persons examined will be estimated by marks; and the number set opposite to each branch in the preceding regulation denotes the greatest number of marks that can be obtained in respect of it.

6. The marks assigned to candidates in each branch will be subject to such deduction as the Civil Service Commissioners may deem necessary, in order to secure that "a candidate be allowed no credit at all for taking up a subject in which "he is a mere smatterer."

7. The examination will be conducted by means of printed questions and written answers, and by *vivâ voce* examination, as may be deemed necessary.

8. The marks obtained by each candidate, in respect of each of the subjects in which he shall have been examined, will be added up, and the names of the candidates who shall have obtained a greater aggregate number of marks than any of the remaining candidates, will be set forth in order of merit, and such candidates shall be deemed to be selected candidates for the Civil Service of India, provided they appear to be in other respects duly qualified. Should any of the selected candidates become disqualified, the Secretary of State for India will determine whether the vacancy thus created shall be filled up or not. In the former case, the candidate next in order of merit, and in other respects duly qualified, shall be deemed to be a selected candidate. A selected candidate declining to accept the appointment which may be offered to him will be disqualified for any subsequent competition.

9. Selected candidates, before proceeding to India, will be on probation for two years, during which time they will be examined periodically, with a view of testing their progress in the following subjects :—*

	Marks.
1. Law - - - - - -	1,250
2. Classical Languages of India—	
Sanskrit - - - - -	500
Arabic - - - - -	400
Persian - - - - -	400
3. Vernacular Languages of India (each) -	400
4. The History and Geography of India - -	350
5. Political Economy - - - -	350

In these examinations, as in the open competition, the merit of the candidates examined will be estimated by marks, and the number set opposite to each subject denotes the greatest number of marks that can be obtained in respect of it at any one examination. The examination will be conducted by means of printed questions and written answers, and by *vivâ voce* examination, as may be deemed necessary. The last of these examinations will be held at the close of the second year of probation, and will be called the "final examination," at which it will be decided whether a selected candidate is qualified for the Civil Service of India. At this examination candidates will be permitted to take up any one of the following branches of Natural Science, viz., Botany, Geology, and Zoology, for which 350 marks will be allowed.

10. Any candidate who, at any of the periodical examinations, shall appear to have wilfully neglected his studies, or to be physically incapacitated for pursuing the prescribed course of training, will be liable to have his name removed from the list of selected candidates.

11. The selected candidates who, at the final examination, shall be found to have a competent knowledge of the subjects specified in Regulation 9, and who shall have satisfied the Civil Service Commissioners of their eligibility in respect of age, health, and character, shall be certified by the said Commissioners to be entitled to be appointed to the Civil Service of India, provided they shall comply with the regulations in force at the time for that Service.

12. Applications from persons desirous to be admitted as candidates are to be addressed to the "Secretary to the Civil Service Commissioners, London, S.W.," from whom the proper form for the purpose may be obtained.

September 1877.

---

* Full instructions as to the course of study to be pursued will be issued to the successful candidates as soon as possible after the result of the open competition is declared.

OPEN COMPETITION, July 1878.

Regulations.

The Civil Service Commissioners are authorised by the Secretary of State for India in Council to make the following announcements :—

(1.) *Selected candidates will be permitted to choose,* according to the order in which they stand in the list resulting from the open competition as long as a choice remains, the Presidency (and in Bengal the division of the Presidency) to which they shall be appointed, but this choice will be subject to a different arrangement, should the Secretary of State or Government of India deem it necessary.*

(2.) *The probationers, having passed the necessary examinations, will be required to report themselves to their Government in India not later than the close of December* 1881.

(3.) *The seniority in the Civil Service of India of the selected candidates shall be determined according to the order in which they stand on the list resulting from the final examination.*

(4.) *An allowance of* 150*l. a year will be given during each of the two years of their probation to all candidates who pass their probation at some University to be approved beforehand by the Secretary of State, provided such candidates shall have passed the required examinations to the satisfaction of the Civil Service Commissioners, and shall have complied with such rules as may be laid down for the guidance of selected candidates.*

(5.) *All selected candidates will be required, after having passed the second periodical examination, to attend at the India Office for the purpose of entering into an agreement binding themselves, amongst other things, to refund in certain cases the amount of their allowance in the event of their failing to proceed to India. A surety will be required.*

(6.) *After passing the final examination, each candidate will be required to attend again at the India Office, with the view of entering into covenants. The stamps payable on these documents amount to* 1*l.*

(7.) *Candidates rejected at the final examination of* 1880 *will in no case be allowed to present themselves for re-examination.*

Arrangements.

ARRANGEMENTS FOR THE OPEN COMPETITION OF JUNE AND JULY 1878.

NOTICES.

1. This paper should be carefully preserved, and produced when required during the course of the examination.
2. It is requested that the candidate will acknowledge the receipt of this paper by writing his name on the outside of the enclosed envelope, and returning it through the post.
3. It is requested that any candidate intending to withdraw will give early notice of such intention, and return this paper.
4. On the first day of the examination, candidates will be required to state on a form which will be placed before them their addresses during the examination, and they are requested thereafter to keep the Commissioners informed of all changes in their address until they have received the announcement of the result of the examination.
5. The result of the examination will be communicated by letter to each candidate, probably early in August. The successful candidates will be required to attend in London, *immediately after this announcement*, for the purpose of being medically examined, of exercising their choice of presidency, and of receiving instructions as to the special studies to be pursued during their two years of probation.

---

* This choice must be exercised immediately after the result of the open competition is announced, on such day as may be fixed by the Civil Service Commissioners.

OPEN COMPETITION, July 1878.

Arrangements.

6. Candidates will be required to leave their hats, overcoats, umbrellas, and any books or papers which they may have brought with them in the room provided for this purpose, before proceeding to the examination room.

7. The examination on paper will in each case begin at the hour indicated in the following time table, but the door of the examination room will be kept open for half an hour afterwards, in order that candidates may not suffer from accidental delays. Candidates arriving after the expiration of that half hour will not be admitted.

8. No candidate will be allowed to quit the examination room on any day until the expiration of half an hour from the time fixed for the commencement of the examination.

9. The number in the margin (and *not* the name of the candidate) must be placed outside each book sent in to the Examiners.

10. No candidate who has left the examination room during the hours assigned to paper work will be permitted to return to the paper which he has quitted.

11. Candidates wishing for explanation of the meaning of any of the questions before them may apply to the Examiners. With this exception, perfect silence is to be preserved in the examination room; and any candidate guilty of disorderly or improper conduct will be liable to be excluded from the examination.

12. Any candidate detected in the use of a book or manuscript brought with him for his assistance, or in copying from the papers of any other candidate, or in giving or receiving assistance of any description, will be regarded as disqualified, and his name will be removed from the list.

N.B.—At this examination 13 candidates will be selected, if so many shall be found duly qualified. Of these, 7 will be selected for the Presidency of Bengal (4 for the Upper Provinces, and 3 for the Lower Provinces), 3 for the Presidency of Bombay, and 3 for the Presidency of Madras.

Civil Service Commission,
Cannon Row, London, S.W.,
June 1878.

OPEN COMPETITION, July 1878.

Arrangements.

TIME TABLE OF THE EXAMINATION ON PAPER.

To be held at the South Exhibition Galleries, South Kensington (entrance in Exhibition Road).

Day.	Hour.	Subject.
Tuesday, 25th June -	10 A.M. *to* 1 P.M.	English Composition (1).
	2 P.M. *to* 5 P.M.	English Composition (2).
Wednesday, 26th June	10 A.M. *to* 1 P.M.	English History (1).
	2 P.M. *to* 5 P.M.	English History (2).
Thursday, 27th June -	10 A.M. *to* 1 P.M.	English Literature (1).
	2 P.M. *to* 5 P.M.	English Literature (2).
Friday, 28th June -	10 A.M. *to* 1 P.M.	Translation from Latin.
	2 P.M. *to* 5.30 P.M.	French.
Saturday, 29th June -	10 A.M. *to* 1 P.M.	Translation into Latin.
	2 P.M. *to* 5 P.M.	Translation from Greek.
Monday, 1st July -	10 A.M. *to* 1 P.M.	Translation into Greek.
	2 P.M. *to* 5 P.M.	Translation from Latin and from Greek.
Tuesday, 2nd July -	10 A.M. *to* 1 P.M.	Arithmetic and Algebra. Sanskrit (1).
	2 P.M. *to* 5 P.M.	Geometry. Sanskrit (2).
Wednesday, 3rd July	10 A.M. *to* 1 P.M.	Pure Mathematics (1).
	2 P.M. *to* 5 P.M.	Pure Mathematics (2).
Thursday, 4th July -	10 A.M. *to* 1 P.M.	Pure and Mixed Mathematics. (Easy Problems.)
	2 P.M. *to* 5 P.M.	Statics and Dynamics.
Friday, 5th July -	10 A.M. *to* 1 P.M.	Mixed Mathematics (Higher).
	2 P.M. *to* 5 P.M.	Political Economy.
Saturday, 6th July -	10 A.M. *to* 1 P.M.	Mechanical Philosophy.
	2 P.M. *to* 5.30 P.M.	German.
Monday, 8th July -	10 A.M. *to* 1 P.M.	Electricity and Magnetism.
	2 P.M. *to* 5.30 P.M.	Italian.
Tuesday, 9th July -	10 A.M. *to* 1 P.M.	Logic.
	2 P.M. *to* 5 P.M.	Heat and Light.
Wednesday, 10th July	10 A.M. *to* 1 P.M.	Chemistry.

*** There will be *viva voce* examinations in all the subjects.

TABLE OF MARKS.—OPEN COMPETITION OF JULY 1878 FOR THE CIVIL SERVICE OF INDIA.

In pursuance of paragraph 6 of the Regulations (*see* p. 335) a deduction of 100 has been made from the marks assigned in each subject, except English Composition and Mathematics.

OPEN COMPETITION OF JULY 1878.—TABLE OF MARKS.—SELECTED CANDIDATES.

Order of Merit.	No. in Examination.	Name.	Age on 1st January 1878.	NUMBER OF MARKS OBTAINED.																	
				English.			Greek.	Latin.	French.	German.	Italian.	Mathematics.	Natural Science.				Logic.	Political Economy.	Sanskrit.	Arabic.	Total.
				Composition.	History.	Literature.							Chemistry.	Electricity and Magnetism.	Heat and Light.	Mechanical Philosophy and Astronomy.					
				Maximum Number of Marks.																	
				300	300	300	600	800	500	500	400	1,000	500	300	300	300	300	300	500	500	
1	38	Payne; Charles Wynter - -	18	180	78	104	312	560	229	—	—	585	—	—	—	—	—	—	—	—	2,048
2	2	Innes; James Edgeworth - -	18	192	—	82	171	416	81	31	—	561	—	160	—	153	—	—	—	—	1,847
3	53	Atkins; John De Courcy - -	18	205	128	58	139	265	189	—	—	602	—	—	0	92	27	—	—	—	1,705
4	75	Carlyle; Robert Warrand - -	18	149	—	—	69	296	197	335	203	297	—	13	—	93	—	—	—	—	1,652
5	95	Davis; John Samuel Champion -	18	210	—	115	231	417	—	—	—	544	—	—	—	119	—	10	—	—	1,646
6	123	Stack; William George - -	18	189	95	77	192	319	—	—	—	554	—	—	—	164	—	45	—	—	1,635
7	1	Moscardi; William - - -	18	195	30	15	223	375	270	301	174	—	—	—	—	—	—	0	—	—	1,583
8	130	Hewetson; John - - -	18	219	159	128	175	330	—	—	—	358	—	15	—	—	65	55	—	—	1,554
9	135	Brown; Kenworthy - -	18	129	65	113	34	361	281	332	202	—	—	—	—	—	—	10	—	—	1,527
10	63	Crowly; Joseph - - -	18	179	143	128	0	441	216	—	—	304	—	—	—	—	109	0	—	—	1,520
11	8	Macleod; Bannatyne - -	17	206	78	121	—	353	208	109	—	420	—	—	—	118	—	—	—	—	1,513
12	57	Rawson; Edward Creswell -	18	190	—	106	42	221	65	—	—	649	—	101	—	129	—	—	—	—	1,505
13	21	Bayne; Charles Gerwien - -	17	157	146	58	167	493	205	143	10	—	—	—	—	—	—	0	—	—	1,475

OPEN COMPETITION OF JULY 1878.—TABLE OF MARKS.—CANDIDATES NOT SELECTED.

Order of Merit.	No. in Examination.	NUMBER OF MARKS OBTAINED.																	
		ENGLISH.			Greek.	Latin.	French.	German.	Italian.	Mathematics.	NATURAL SCIENCE.				Logic.	Political Economy.	Sanskrit.	Arabic.	Total.
		Composition.	History.	Literature.							Chemistry.	Electricity and Magnetism.	Heat and Light.	Mechanical Philosophy and Astronomy.					
		Maximum Number of Marks.																	
		300	300	300	600	800	500	500	400	1,000	500	300	300	300	300	300	500	500	
14	78	185	97	127	170	411	184	—	139	110	—	—	—	—	5	43	—	—	1,471
15	55	215	52	72	312	598	165	—	—	—	—	—	—	—	—	20	—	—	1,434
16	120	159	—	—	197	248	—	—	—	695	—	—	0	125	—	—	—	—	1,424
17	140	129	—	0	64	262	48	369	—	184	236	70	—	—	—	—	—	—	1,362
18	54	196	90	88	161	302	235	—	—	224	—	—	—	—	57	—	—	—	1,353
19	129	193	0	111	—	230	194	227	179	169	—	—	0	0	—	—	—	—	1,303
20	60	241	101	158	155	298	178	—	168	—	—	—	—	—	—	0	—	—	1,299
21	3	166	96	61	93	238	141	374	107	21	—	—	—	—	—	—	—	—	1,297
22	42	223	0	54	—	130	—	—	—	603	—	—	74	110	—	20	—	—	1,214
23	108	197	88	98	155	295	138	—	—	186	—	—	—	36	—	—	—	—	1,193
24	27	198	83	83	57	482	164	—	122	—	—	—	—	—	—	—	—	—	1,189
25	132	201	93	115	175	370	118	—	—	23	—	—	—	—	41	51	—	—	1,187
26	102	157	0	47	166	380	200	224	0	—	—	—	—	—	—	0	—	—	1,174
27 {	26	122	—	—	192	413	160	—	—	279	—	—	—	0	—	—	—	—	1,166
	30	263	0	105	184	411	161	—	42	—	—	—	—	—	0	0	—	—	1,166
29	50	130	—	34	—	—	—	—	—	761	—	45	—	155	36	0	—	—	1,161

OPEN COMPETITION, July 1878.

Open Competition of July 1878.—Table of Marks.—Candidates not selected—*continued.*

Order of Merit.	No. in Examination.	NUMBER OF MARKS OBTAINED.											
		ENGLISH.									NATURAL SC		
		Composition.	History.	Literature.	Greek.	Latin.	French.	German.	Italian.	Mathematics.	Chemistry.	Electricity and Magnetism.	[illegible]
		Maximum Number of Marks.											
		300	300	300	600	600	500	500	430	1,000	500	300	
30	6	208	32	39	—	76	209	112	—	323	115	—	
	86	160	—	61	—	222	335	269	33	74	—	—	
32	84	210	14	52	77	331	0	117	—	249	—	66	
33	88	183	107	83	171	322	102	—	—	78	—	—	
34	56	172	0	0	133	352	4	346	—	127	—	—	
35	32	155	139	—	33	292	179	—	—	307	—	—	
36	7	145	72	68	—	184	—	—	—	382	235	18	
	36	160	144	85	—	75	185	—	—	436	—	—	
38	4	173	63	108	67	328	127	—	103	133	—	—	
39	31	209	93	53	104	326	127	163	—	—	—	—	
40	141	207	88	—	127	287	158	—	—	182	—	0	
41	72	101	17	61	0	387	123	—	—	350	—	—	
42	9	150	105	71	109	272	96	—	—	148	—	—	
43	45	145	54	91	225	405	—	—	—	114	—	—	
44	65	91	—	0	39	202	159	—	—	496	—	—	
45	131	189	55	0	164	440	104	—	57	—	—	—	

OPEN COMPETITION, July 1878.

Open Competition of July 1878.—Table of Marks.—Candidates not selected—*continued.*

Order of Merit.	No. in Examination.	NUMBER OF MARKS OBTAINED.					
		Italian.	Mathematics.	Natural Science.			
				Chemistry.	Electricity and Magnetism.	Heat and Light.	[illegible]
		Maximum Number of Marks.					
		400	1,000	600	300	300	
19	19	1	79	1	1	1	
20	20	166	396	1	1	1	
21	21	1	1	1	1	1	
22	22	1	95	1	1	1	
23	23	1	99	1	0	1	
24	24	1	44	164	1	1	
25	25	1	99	1	1	1	
26	26	0	151	0	1	0	
27	27	1	1	1	1	1	
28	28	1	449	1	1	1	
29	29	1	395	1	1	1	
30	30	80	1	1	1	1	
31	31	1	111	1	1	1	
32	32	1	135	1	1	1	
33	33	1	382	1	1	1	
34	34	1	377	180	0	0	
35	35	1	1	1	1	1	
36	36	1	1	1	1	1	
37	37	1	1	1	1	1	
38	38	1	1	1	1	1	
39	39	1	1	1	1	1	
40	40	1	1	1	1	1	
41	41	1	1	1	1	1	
42	42	1	1	1	1	1	
43	43	1	1	1	1	1	
44	44	1	1	1	1	1	
45	45	1	1	1	1	1	
46	46	1	1	1	1	1	
47	47	1	1	1	1	1	
48	48	1	1	1	1	1	
49	49	1	1	1	1	1	
50	50	1	1	1	1	1	
51	51	1	1	1	1	1	
52	52	1	1	1	1	1	
53	53	1	1	1	1	1	
54	54	1	1	1	1	1	
55	55	1	1	1	1	1	
56	56	1	1	1	1	1	
57	57	1	1	1	1	1	
58	58	1	1	1	1	1	
59	59	1	1	1	1	1	
60	60	1	1	1	1	1	
61	61	1	1	1	1	1	
62	62	1	1	1	1	1	
63	63	1	1	1	1	1	
64	64	1	1	1	1	1	
65	65	1	1	1	1	1	
66	66	1	1	1	1	1	
67	67	1	1	1	1	1	
68	68	1	1	1	1	1	
69	69	1	1	1	1	1	
70	70	1	1	1	1	1	
71	71	1	1	1	1	1	
72	72	1	1	1	1	1	
73	73	1	1	1	1	1	
74	74	1	1	1	1	1	
75	75	1	1	1	1	1	
76	76	1	1	1	1	1	
77	77	1	1	1	1	1	
78	78	1	1	1	1	1	
79	79	1	1	1	1	1	
80	80	1	1	1	1	1	
81	81	1	1	1	1	1	
82	82	1	1	1	1	1	
83	83	1	1	1	1	1	
84	84	1	1	1	1	1	
85	85	1	1	1	1	1	
86	86	1	1	1	1	1	
87	87	1	1	1	1	1	
88	88	1	1	1	1	1	
89	89	1	1	1	1	1	
90	90	1	1	1	1	1	
91	91	1	1	1	1	1	
92	92	1	1	1	1	1	
93	93	1	1	1	1	1	
94	94	1	1	1	1	1	
95	95	1	1	1	1	1	
96	96	1	1	1	1	1	
97	97	1	1	1	1	1	
98	98	1	1	1	1	1	
99	99	1	1	1	1	1	
100	100	1	1	1	1	1	

Open Competition of July 1878.—Table of Marks.—Candidates not selected—continued.

Order of Merit.	No. in Examination.	Maximum Number of Marks.				NUMBER OF MARKS OBTAINED.			
		400	1,000	500	300	Italian.	Mathematics.	Natural Science. Chemistry.	Natural Science. Electricity and Magnetism.	Natural Science. Heat and Light.
22	22									
23	23									
24	24									

OPEN COMPETITION, July 1878.

Open Competition of July 1878.—Table of Marks.—Candidates not selected—*continued.*

Order of Merit.	No. in Examination.	NUMBER OF MARKS OBTAINED.																
		ENGLISH.						NATURAL SCIENCE.										
		Composition.	History.	Literature.	Greek.	Latin.	French.	German.	Italian.	Mathematics.	Chemistry.	Electricity and Magnetism.	Heat and [illegible]					
		Maximum Number of Marks.																
		800	200	300	600	800	500	500	400	1,000	500	500	300					
78	128	96	—	—	0	100	114	—	—	332	—	0	—					
79	164	130	—	45	0	256	134	—	0	185	—	—	—					
80	107	116	51	45	106	260	0	—	—	26	—	—	—					
81	134	147	—	0	106	246	68	—	—	25	—	—	—					
82	114	114	—	13	—	85	161	114	—	154	—	—	—					
83	73	101	—	—	61	207	47	—	—	67	—	—	—					
84	15	170	64	106	46	213	—	—	—	—	45	0	—					
85	105	134	60	34	—	49	22	—	—	215	10	—	—					
86	65	138	—	43	82	240	0	—	41	56	—	—	—					
87	117	106	46	0	0	207	288	—	—	1	—	—	—					
88	115	85	—	—	141	251	54	68	—	95	—	—	—					
89	101	175	134	106	—	—	25	—	—	95	—	—	—					
90	111	157	3	66	0	13	0	—	—	46	—	—	—					
91	35	115	—	0	—	—	176	158	—	267	—	0	—					
92	109	153	33	71	—	235	—	—	—	135	—	—	—					
93	91	169	56	4	0	231	30	—	—	97	—	—	—					

OPEN COMPETITION, July 1878.

Open Competition of July 1878.—Table of Marks.—Candidates not selected—*continued.*

Order of Merit.	No. in Examination.	NUMBER OF MARKS OBTAINED.											
		English.									Natural Scie		
		Composition.	History.	Literature.	Greek.	Latin.	French.	German.	Italian.	Mathematics.	Chemistry.	Electricity and Magnetism.	Heat and Light.
		Maximum Number of Marks.											
		300	300	300	600	800	500	500	400	1,000	500	300	300
94	71	167	28	47	—	65	119	46	—	106	—	—	—
95	17	98	—	—	13	264	77	—	0	111	—	—	—
96	48	114	0	0	100	332	—	0	—	12	—	—	—
97	121	131	12	8	8	115	1	—	—	266	—	—	—
98	41	166	0	—	74	241	0	—	—	59	—	—	—
99	76	141	26	39	63	205	59	—	—	—	—	—	—
100	51	97	55	14	48	175	148	—	0	—	—	—	—
101	93	109	48	68	—	35	—	—	—	170	69	—	—
102	19	173	0	0	32	311	0	—	—	1	—	—	—
	133	125	0	0	0	257	35	—	—	100	—	—	—
104	83	101	—	—	—	0	113	168	46	69	—	—	—
105	52	16	—	—	40	282	86	—	0	74	—	—	—
106	38	107	7	77	—	0	142	119	—	18	—	—	—
107	40	99	—	0	0	4	257	—	—	104	—	—	—
	136	55	0	19	—	—	—	—	—	211	179	—	[illegible]
109	112	94	0	54	—	—	—	—	—	277	—	0	—

OPEN COMPETITION, July 1878.

Open Competition of July 1878.—Table of Marks.—Candidates ı

Order of Merit.	No. in Examination.	NUMBER OF MARKS OBTAINED. English. Composition.	History.	Literature.	Greek.	Latin.	French.	German.	Italian.	Mathematics.	Natural Scie[nce] Chemistry.	Electricity and Magnetism.	Heat and Light						
		Maximum Number of Marks. 300	300	300	600	900	500	500	400	1,000	500	300	300	300	300	300	500	500	
110	5	126	13	46	0	106	16	97	—	—	0	—	—	—	—	—	—	—	406
111	29	166	18	54	—	0	—	—	—	160	—	0	—	0	—	6	—	—	396
112	116	56	—	0	0	65	0	—	—	226	—	—	—	47	—	—	—	—	394
113	34	162	0	17	0	113	—	—	—	97	—	—	—	0	—	—	—	—	389
114	43	167	11	61	0	126	20	—	0	—	—	—	—	—	—	0	—	—	375
115	74	114	0	4	0	242	0	—	—	1	—	—	—	—	—	—	—	—	361
116	69	79	16	29	—	101	50	—	0	70	—	—	—	—	—	0	—	—	345
117	166	153	30	90	—	23	0	—	0	46	—	—	—	—	0	0	—	—	343
118	70	77	16	30	—	—	—	0	—	190	—	6	—	0	—	0	—	—	327
119	134	136	2	46	0	77	7	—	—	45	—	—	—	0	—	0	—	—	316
120	94	89	17	31	0	154	0	0	0	—	—	—	—	—	—	0	—	—	301
121	96	116	0	0	0	56	—	—	—	66	—	—	—	—	—	—	—	—	249
122	11	117	0	11	1	94	—	0	—	—	—	—	—	—	—	—	—	—	213
123	61	55	0	0	0	68	88	—	0	—	—	—	—	—	—	0	—	—	211
124	90	87	—	—	0	118	0	0	0	—	—	—	—	—	0	—	—	—	205
125	47	126	0	0	0	47	0	—	—	96	—	—	—	—	—	—	—	—	201

Open Competition of July 1878.—Table of Marks.—Candidates not selected—*continued.*

Order of Merit.	No. in Examination.	Maximum Number of Marks.									
		500	300	300	600	600	800	400	1,500	600	
126	137	126	0	0	1	1	1	1	64	1	
127	89	83	34	34	0	0	1	0	1	1	
128	95	105	16	16	0	0	1	0	1	1	
129	63	1	1	1	0	0	1	1	50	1	
130	126	50	1	1	1	0	1	0	56	1	
131	96	76	0	0	0	0	1	0	36	1	
132	125	85	0	0	0	1	1	1	1	1	
133	71	46	0	0	0	0	1	0	1	1	
134	50	35	0	0	0	0	1	0	1	1	

NUMBER OF MARKS OBTAINED.			
	Italian.		
	Mathematics.		
Natural Sci.	Chemistry.		
	Electricity and Magnetism.		
	Heat and		

4.—EXAMINATION PAPERS

THE FINAL EXAMINATION OF CANDIDATES SELECTED IN 1876.

REGULATIONS.

ted candidates, before proceeding to India, will be on probation ars, during which time they will be examined periodically, w of testing their progress in the following subjects :—*

	Marks.
Oriental Languages :	
Sanskrit - - - - -	500
Vernacular† Languages of India (each) -	400
The History and Geography of India -	350
Law - - - - - -	1,250
Political Economy - - - -	350

examinations, as in the open competition, the merit of the examined will be estimated by marks, and the number set each subject denotes the greatest number of marks that can l in respect of it at any one examination. The examination nducted by means of printed questions and written answers, d *voce* examination, as may be deemed necessary. The last aminations will be held at the close of the second year of and will be called the "final examination," at which it will whether a selected candidate is qualified for the Civil Service

candidate who, at any of the periodical examinations, shall ave wilfully neglected his studies, or to be physically incapa- pursuing the prescribed course of training, will be liable to ame removed from the list of selected candidates.

selected candidates who, at the final examination, shall be have a competent knowledge of the subjects specified in .9, and who shall have satisfied the Civil Service Commissioners ligibility in respect of age, health, and character, shall be the said Commissioners to be entitled to be appointed to the ice of India, provided they shall comply with the regulations the time, for that Service.

lications from persons desirous to be admitted as candidates ddressed to the Secretary to the Civil Service Commissioners, .W., from whom the proper form for the purpose may be

ne 1875.

---

tructions as to the course of study to be pursued will be issued to the ndidates as soon as possible after the result of the open competition is

g, besides the languages prescribed for the several Presidencies, such ges as may, with the approval of the Commissioners, be taken up as xamination.

FINAL EXAMINATION. CANDIDATES OF 1876.

The Civil Service Commissioners are authorised by the Secretary of State for India in Council to make the following announcements :—

(1.) *Selected candidates will be permitted to choose,* according to the order in which they stand in the list resulting from the open competition as long as a choice remains, the Presidency (and in Bengal the division of the Presidency) to which they shall be appointed, but this choice will be subject to a different arrangement, should the Secretary of State or Government of India deem it necessary*

(2.) *No candidate will be permitted to proceed to India before he shall have passed the final examination, and received a certificate of qualification from the Civil Service Commissioners, or after he shall have attained the age of twenty-four years.*

(3.) *The seniority in the Civil Service of India of the selected candidates shall be determined according to the order in which they stand on the list resulting from the final examination.*

(4.) *It is the intention of the Secretary of State to allow the sum of* 50*l. after each of the three first half years of probation, and* 150*l. after the last half year, to each selected candidate who shall have passed the required examinations to the satisfaction of the Commissioners, and shall have complied with such rules as may be laid down for the guidance of selected candidates.*

(5.) *All selected candidates will be required, after having passed the second periodical examination, to attend at the India Office for the purpose of entering into an agreement binding themselves, amongst other things, to refund in certain cases the amount of their allowance in the event of their failing to proceed to India. For a candidate under age a surety will be required.*

(6.) *After passing the final examination, each candidate will be required to attend again at the India Office, with the view of entering into covenants and giving a bond for* 1,000*l., jointly with two sureties, for the due fulfilment of the same. The stamps payable on these documents amount to* 1*l.* 10*s.*

(7.) *Candidates rejected at the final examination of* 1878 *will in no case be allowed to present themselves for re-examination.*

For the Instructions given to the Candidates with regard to the Final Examination *see* p. 306.

ARRANGEMENTS FOR THE FINAL EXAMINATION OF CANDIDATES SELECTED IN 1876.

NOTICES.

1. This paper should be carefully preserved, and produced when required during the course of the examination.
2. No candidate will be allowed to quit the examination room on any day until the expiration of half an hour from the time fixed for the commencement of the examination; and candidates arriving after the expiration of that half hour will not be admitted.
3. No candidate who has left the examination room during the hours assigned to paper work will be permitted to return to the paper which he has quitted.
4. Any candidate detected in the use of a book or manuscript brought with him for his assistance, or in copying from the papers of any other candidate, or in giving or receiving assistance of any description, will be regarded as disqualified, and his name will be removed from the list.
5. The result of the examination will probably be known about the middle of July, and will be communicated by letter to each candidate.

Civil Service Commission,
Cannon Row, London, S.W.,
May 1878.

---

* This choice must be exercised immediately after the result of the open competition is announced, on such day as may be fixed by the Civil Service Commissioners.

FINAL EXAMINATION. CANDIDATES OF 1876.

FINAL EXAMINATION OF CANDIDATES SELECTED IN 1876.

Order of the Examination on Paper.

Place of Examination.	Day.	Hour.	Subjects of Examination.
Civil Service Commission, Cannon Row.	1878.		
	Tuesday, 4th June -	10 A.M. to 1 P.M.	Law.
		2 P.M. to 5 P.M.	
	Wednesday, 5th June -	10 A.M. to 1 P.M.	Law.
		2 P.M. to 5 P.M.	
	Thursday, 6th June -	10 A.M. to 1 P.M.	Law.
		2 P.M. to 5 P.M.	
	Friday, 7th June -	10 A.M. to 1 P.M.	Law.
		2 P.M. to 5 P.M.	
	Saturday, 8th June -	10 A.M. to 1 P.M.	Law (Prize Examination).*
	Monday, 10th June -	10 A.M. to 1 P.M.	History and Geography of India.
		2 P.M. to 5 P.M.	History and Geography of India.
	Tuesday, 11th June -	10 A.M. to 1 P.M.	History and Geography of India (Prize Examination).*
		2 P.M. to 5 P.M.	Political Economy.
	Wednesday, 12th June	10 A.M. to 1 P.M.	Political Economy.
		2 P.M. to 5 P.M.	Political Economy (Prize Examination).*
	Thursday, 13th June -	10 A.M. to 1 P.M.	Hindustani and Telugu.
		2 P.M. to 5 P.M.	Hindustani and Telugu.
	Friday, 14th June -	10 A.M. to 1 P.M.	Hindustani and Telugu.
		2 P.M. to 5 P.M.	Hindustani and Telugu (Prize Examinations).*
	Monday, 17th June -	10 A.M. to 1 P.M.	Bengali and Hindi.
		2 P.M. to 5 P.M.	Bengali and Hindi.
	Tuesday, 18th June -	10 A.M. to 1 P.M.	Bengali and Hindi (Prize Examinations).*
		2 P.M. to 5 P.M.	Tamil and Marathi.
	Wednesday, 19th June	10 A.M. to 1 P.M.	Tamil and Marathi.
		2 P.M. to 5 P.M.	Tamil and Marathi (Prize Examinations).*
	Thursday, 20th June -	10 A.M. to 1 P.M.	Sanskrit.
		2 P.M. to 5 P.M.	Sanskrit.

* Candidates will be admitted to the examination for prizes pending the decision of the Commissioners as to their eligibility. They must hold themselves in readiness to attend for *viva voce* examination, if required.

*** There will be a *viva voce* examination in each subject.

FINAL EXAMINATION. CANDIDATES OF 1876.

Place of Examination.	Day.	Hour.	Subjects of Examination.
Civil Service Commission, Cannon Row.	*Friday, 21st June* -	10 A.M. to 1 P.M.	Sanskrit (Prize Examination).*
		2 P.M. to 5 P.M.	Arabic.
	Saturday, 22nd June -	10 A.M. to 1 P.M.	Arabic.
		2 P.M. to 5 P.M.	Arabic (Prize Examination).*
	Monday, 24th June -	10 A.M. to 1 P.M.	Persian.
		2 P.M. to 5 P.M.	
	Tuesday, 25th June -	10 A.M. to 1 P.M.	Persian (Prize Examination).*

* Candidates will be admitted to the examination for prizes pending the decision of the Commissioners as to their eligibility. They must hold themselves in readiness to attend for *viva voce* examination, if required.

LAW OF EVIDENCE. (1.)

KENELM E. DIGBY, Esq.

Tuesday, 4th June 1878. 10 A.M. to 1 P.M.

1. Under what branch of a general system of law would you place the law of evidence? Define its limits, and point out its principal divisions.
2. Discuss the relevancy of the following facts, and state the principles upon which your conclusion is based:
   (1.) A, before her death, makes a gift to B. C, administrator of A, takes proceedings to set aside the gift on the ground of undue influence. Declarations made by A subsequent to the gift are tendered both by C and B, in support of their respective cases.
   (2.) A desires to prove that when he sold certain goods to the defendant B, B was acting not on his own account but as agent for C. A offers to prove that at the time of the contract B gave the name of D as a reference for the responsibility of C as buyer, and produces a letter written on the same date by A to an agent E, directing E to make inquiries of D as to the responsibility of C, and stating that B was making the purchase on behalf of C.
   (3.) To prove A's age evidence is offered of an entry by the deceased incumbent of the parish in which A was born of a certified copy of the register of A's baptism, in which the date of his birth is stated.
   (4.) To prove the handwriting of A, persons are called who have from time to time corresponded with him but have never seen him write.
3. State accurately the changes in the law as to the removal of the disabilities of witnesses on the ground of defective religious belief.

FINAL EXAMINATION. CANDIDATES OF 1876.

4. Examine the following cases :
   (1.) A lease contains the usual covenant not to assign without the consent of the lessor. A, the lessee, agrees, in writing, with B to assign the lease to him. In an action against A for breach of the agreement, A offers to prove that it was at the same time verbally agreed that the agreement to assign should be conditional on A's obtaining the lessor's consent, and that the lessor refused.
   (2.) In an action by A against B for breach of an agreement in writing to purchase five lots of land provided that A should make a good title to each, A desires to prove that B afterwards verbally consented to take one lot, though the title was bad.
   (3.) The question is whether a horse is the property of A or B. A offers to prove that C was convicted for stealing the horse, and that it was described in the indictment as the property of A.
   (4.) A is sued for a trespass on a village green. He justifies under a claim for all inhabitants of a village to use the green as a place of recreation. He tenders evidence of a judgment in an action relating to the same spot, where the pleadings were similar, and the verdict was for the defendant; of a similar custom in an adjoining village; of a declaration by a deceased person that when he was a boy he used to play cricket on the green; of a letter written by the same person stating that any boy in the parish might play there whenever he chose.
5. In what cases and by what process can the evidence of living persons be given without their personal attendance in court ?
6. State and compare the rules of English and Indian law as to—
   (1.) Obligation of a witness to answer (*a*) criminating questions.
   (*b*) questions designed to effect his credit by injuring his character.
   (2.) The powers and duties of the Presidency judge in dealing with evidence.
   (3.) Proof of the contents of a document by oral admission.
7. Explain and comment upon the following propositions :
   (1.) "There are no degrees of secondary evidence."
   (2.) "Res inter alios acta alteri nocere non debet."
   (3.) "The rules of evidence have been matured by the wisdom
   " of ages, and are now revered from their antiquity and
   " the good sense on which they are founded."

LAW OF EVIDENCE. (2.)

KENELM E. DIGBY, Esq.

Tuesday, 4th June 1878. 2 P.M. to 5 P.M.

1. In what ways does the litigious character of English criminal procedure effect prejudicially or otherwise the conduct of a criminal prosecution ?
2. Is the following evidence admissible ? Point out any additional facts the proof of which would let in evidence of any facts not otherwise admissible :
   (*a.*) The question is whether cloth sold by A to B was of a quality equal to a particular sample. Evidence is tendered that similiar cloth sold about the same time by A to C, D, and E was inferior to the same sample.

(*b.*) A is being tried for obtaining an advance upon a ring by the false pretence that it was a diamond ring. Evidence is offered that on a previous occasion he had obtained advances on a counterfeit gold chain and a false diamond ring.

(*c.*) To prove that A has been paid a sum for rent, an account purporting to be drawn up by B is produced in which he charges himself with the receipt of the rent on behalf of A. The balance on the whole account is in favour of B.

(*d.*) A is sued by B, one of his workmen, for maliciously prosecuting him for theft. A offers to prove that he acted upon information given him by his foreman, who stated that he had seen B carrying off the goods alleged to have been stolen, and that before taking proceedings A consulted his solicitor, who told him that he ought to prosecute.

3. How far can the rules of evidence be dispensed with by consent? Give instances.
4. Distinguish between "estoppel" and "presumption," and state accurately, with illustrations, the rule as to estoppel by conduct.
5. Examine the following cases:
   (1.) In order to prove that a deed was forged evidence is tendered of an admission by a deceased attesting witness that he had forged it.
   (2.) A, the holder of a bill of exchange, endorses it without consideration to B. B sues the acceptor C. C offers to prove a statement by A made after he had handed the bill to B of the circumstances under which he parted with the bill.
   (3.) A and B, as partners, sue D for damage to goods, the property of their firm. D offers to prove that B had said that the goods belonged to him individually, and not to the firm.
   (4.) A sues B, a carrier, for injury to goods delivered by A to B. To show that B received the goods A tenders in evidence a judgment recovered by the consignee of the goods against B.
6. What is meant by "pre-appointed" or "pre-constituted" evidence? Give instances showing the modes in which, and the purposes for which, this class of evidence has been employed in present or former times.
7. State and explain, with illustrations, the rules which regulate the admissibility of evidence designed to show whether or not the language of a document applies to existing facts.

JURISPRUDENCE. (1.)

T. C. SANDARS, Esq.

Thursday, 6th June 1878. 2 P.M. to 5 P.M.

1. Show the bearing of Austin's Sixth Lecture on the answer to the question "What is meant by positive law?"
2. Give a sketch of the Roman Law regarding slaves.
3. "Occupancy is the advised assumption of physical possession." Explain, and comment on this statement.

FINAL EXAMINATION. CANDIDATES OF 1876.

4. Account for the prominence of Torts and Sins in primitive Jurisprudence as compared with crimes.
5. What is meant by saying that the Sovereign in England is the "fountain of justice"?
6. What, according to Bentham, are the "pathological propositions upon which the good of equality is founded"?
7. In what cases did Bentham propose that exchanges should be treated as invalid?
8. Compare the position of the English Chancellor with that of the Roman Prætor.

JURISPRUDENCE. (2.)

T. C. SANDARS, Esq.

Friday, 7th June 1878. 10 A.M. to 1 P.M.

1. How can the conformity of laws with general expectation be secured by the legislator?
2. What modes of acquiring a Universitas rerum are noticed in the Institutes?
3. What were the heads of Roman actions if divided according to the latitude given to the judge; and what was the general character of the actions falling under the several heads?
4. Compare the testamentary law of Rome and England in regard to (1) the form of the will, (2) the latitude of testamentary power, (3) the revocation of wills.
5. Give a sketch of the English law relating to "Parent and Child."
6. Connect the history of the Patria Potestas with the general history of the Roman family.
7. Give other illustrations of bodies generically and specifically determined than those given by Austin.
8. What are the principal rules of English law as to general and local customs?

LAW OF INDIA. (1.)

Sir H. S. MAINE, K.C.S.I.

Wednesday, 5th June 1878. 10 A.M. to 1 P.M.

INDIAN PENAL CODE.

1. Under what circumstances may acts amounting to Grevious Hurt become justifiable when the person suffering the hurt (*a*) consents to its infliction, (*b*) is insensible, (*c*) endeavours to deprive the author of the hurt of his property illegally?
2. What abuses of power by a Public Servant are, as such, punishable under the Penal Code?
3. Give the provisions of the Penal Code which correspond to the English law against (*a*) High Treason, (*b*) Seditious Libel.
4. Give an abstract of the provisions of the Penal Code repressive of insult or outrage directed against the Native Religions, and show in what respect the preaching of Christian Missionaries is legally distinguishable from these offences.

FINAL EXAMINATION. CANDIDATES OF 1876.

5. What changes in the English Law of Manslaughter and Murder would be required in order to bring it into harmony with the Indian Law on the corresponding subjects ?
6. What offences (if any) are committed under the following circumstances:
   - (α) A, reviewing B's book, says that the morality displayed is exactly that for which B is notorious.
   - (β) A, reviewing B's book, says that the morality it displays is exactly that which characterised B's evidence contained in the report of a recent trial.
   - (γ) A, a surgeon, is called in to amputate the leg of B, who has had a dangerous accident ; A, when he comes, is intoxicated, and B dies under the operation.
   - (δ) A, B, and C wish to revenge themselves on X. A shoots the horse of X ; B shoots X's tame parrot ; C drives a herd of wild deer on to the standing crops on X's land.

CODE OF CRIMINAL PROCEDURE.

1. Contrast a trial in the Sessions Court with a Jury and a trial in the same Court with Assessors in respect of the functions of the Judge.
2. What powers has an Indian Criminal Court of procuring the evidence of witnesses living beyond its local jurisdiction ?
3. Define an European British Subject, and state by what Indian tribunal, and with what procedure, he would be tried for an alleged Culpable Homicide.
4. On what officer does the duty of executing a capital sentence devolve in India, and on what authority does he act in carrying it out ?
5. What methods of control and supervision over subordinate Criminal Courts does the High Court employ, other than those arising out of Appeal.
6. What are the formalities which must be gone through before a Military Officer in command of troops can employ them in suppressing a Riot ?

LAW OF INDIA. (2.)

Sir H. S. MAINE, K.C.S.I.

Wednesday, 5th June 1878. 2 P.M. to 5 P.M.

MAHOMMEDAN LAW.

1. Give a summary of the Mahommedan Law regulating the guardianship of male and female infants (a) where the father is dead, (b) where both parents are dead.
2. What portions of the Mahommedan Law of Contract do you regard as remaining in force after the enactment of the Indian Contract Act ?
3. What is the principle which you consider to have determined the distribution of the Heirs of a Mahommedan into three classes ?
4. If a Mahommedan husband were (a) to personally ill-treat a Mahommedan wife, or (b) to obtain possession of her property and waste it, what would be her legal rights and her remedy ?
5. What are the conditions of a valid Mahommedan marriage ?

FINAL EXAMINATION. CANDIDATES OF 1876.

6. How would the Mahommedan Law distribute the property of an Intestate who has left a mother, a maternal grandfather, three widows, two sons, and a daughter ?

HINDU LAW.

1. What are the conditions of a valid marriage among Brahmin Hindus? How do you interpret the prohibition of intermarriage among *Gotrajas* ?
2. Give a brief account of the legal impediments to a Dattaka Adoption.
3. A Hindu woman, having *Stridhan*, dies leaving two sons, a grandson by a daughter, the daughter of a brother, and two sisters. To whom would her *Stridhan* descend ?
4. What do you consider to be the characteristic marks of archaism in a body of current Hindu law, and, tried by this test, which of the Hindu legal compendia do you regard as the most ancient and which as the most modern ?
5. If a person admitting himself to have been a member of a Hindu Joint Family, alleges that it has separated, what description of evidence should he produce to establish the separation ?
6. Which of the following persons, being members of a Hindu Joint Family, are bound to bring profits into hotchpot, (*a*) a vakeel educated in India at the expense of a stranger, (*b*) a barrister educated in England at the expense of his family, (*c*) a dancing-girl instructed in her art by a stranger, (*d*) an hereditary goldsmith from Lahore working in an English jeweller's shop in Calcutta, (*e*) a Cashmere shawl-weaver following his trade at Loodianah ?

LAW OF INDIA. (3.)

Sir H. S. MAINE, K.C.S.I.

Thursday, 6th June 1878. 10 A.M. to 1 P.M.

INDIAN CONTRACT ACT.

1. Define a Proposal. State whether the following announcements are Proposals, giving reasons for your answer : (*a*) I intend to subscribe 1,000 rupees to the Calcutta General Hospital ; (*b*) I am willing to marry your daughter ; (*c*) I have a pair of horses for sale which would just suit you ; (*d*) You will find me at Barrackpore on Saturday if you wish to sign the agreement.
2. Define Misrepresentation, and state in what respects it differs from Fraud and from Mistake.
3. Set forth the exceptions to the general rule that Agreements, unsupported by consideration, are void ; and compare the provisions of the Contract Act on this head with the English Law on the same subject.
4. Distinguish from one another, in respect of the principle involved, Agreements by way of Wager and Agreements to make good a loss in the event of its occurring. Is an Agreement by A to pay 10,000 rupees to D, provided that B does not die during the lifetime of C, valid ?

FINAL EXAMINATION. CANDIDATES OF 1876.

5. State the essentials of an offer of Performance. In what position is a contractor whose offer of Performance has been declined ?
6. Give a brief account of the Rights and Liabilities of Joint Promisors.
7. When there are reciprocal promises and performance is not to be simultaneous, what is the rule as to the order of performance? What is the order of performance in the following case? A agrees to transfer his shares to B, for 5,000 rupees to be paid in a month, B giving his promissory note for that amount.
8. Illustrate, by examples, the rules (*a*) that compensation is not to be given for remote and indirect loss or damage sustained by reason of a breach of contract, and (*b*) that, in estimating the damage arising from a breach, the means of remedying the inconvenience must be taken into account.
9. Under what circumstances is the seller of goods disentitled to assert his right of lien on the goods for price unpaid, and under what circumstances would this right revive ?
10. Distinguish the contract of Indemnity from the Contract of Guarantee, and explain the nature of continuing guarantees.
11. When the purpose for which a bailment was made has been accomplished, what are the duties of the bailee, and what are the consequences of neglecting those duties? In what respects does the Contract of Pledge differ from other Contracts of Bailment ?
12. Distinguish, in respect of his legal position, a Sub-Agent from an Agent. What are the cases in which a presumption arises that a person contracting with an Agent has bargained for the Agent's responsibility under the contract ?

LAW OF INDIA. (4.)

Sir H. S. MAINE, K.C.S.I.

Friday, 7th June 1878. 2 P.M. to 5 P.M.

CODE of CIVIL PROCEDURE.

1. Describe the mode of serving a summons (*a*) on the defendant personally, (*b*) when the defendant cannot be found, (*c*) when the defendant is keeping out of the way.
2. What is the procedure which a plaintiff may follow when he has evidence that the defendant (α) is about to leave the jurisdiction of the Court in which he is sued, (β) is about to remove his property from such jurisdiction, (γ) is on the point of quitting British India.
3. What effect on civil procedure has the death, marriage, or bankruptcy of one of several plaintiffs in a suit ?
4. Under what circumstances may Injunctions be issued by the Indian Civil Courts and Decrees for Specific Performance made ?
5. What course will an Indian Civil Court follow when the execution of a decree for immoveable property is obstructed (*a*) by the defendant, or by some person at his instigation, (*b*) by a bonâ fide claimant not defendant ?
6. Give an account of the different classes of Appeals allowed by the Code of Civil Procedure, and of the conditions on which they may be instituted ? Are you aware of any proposals which have been made for altering the Indian Law of Civil Appeal ?

FINAL EXAMINATION. CANDIDATES OF 1876.

INDIAN LIMITATION ACT.

1. What do you conceive to be the principle which, in the Indian Limitation Act, determines the greater or less extent of the period of limitation ?
2. In computing the period of limitation, what exclusion of time is made in the following cases, (*a*) where there has been an application for a review of judgment, (*b*) where there has been an application to set aside an award, (*c*) where there has been another bonâ fide proceeding in a Court without jurisdiction ?
3. What is the effect on limitation of an acknowledgment of liability in writing ?
4. When one of several joint creditors is under disability, how are the rights of the others affected in respect of the limitation of suits ?
5. Set forth the periods of limitation in the following cases, and the time from which the period begins to run :
   - (*α*) Suit against a mortgagee to redeem immoveable property mortgaged ?
   - (*β*) Suit by a Hindu under the Mitakshara to set aside his father's alienation of ancestral property.
   - (*γ*) Suit for an account and share of the profits of a dissolved partnership.
   - (*δ*) Suit for the price of goods sold and delivered where no period of credit has been fixed.
   - (*ε*) Suit for money payable in respect of money lent.
   - (*ϑ*) Suit against Government to set aside attachment of immoveable property by revenue authorities.

HISTORY AND GEOGRAPHY OF INDIA.

CLAUDE ERSKINE, Esq.

Monday, 10th June 1878. 10 A.M. to 1 P.M.

1. Describe concisely the state of affairs, in 1760–61, in the Territories around Delhi, and in the Mahratta Provinces, in the Nizam's Dominions, in Mysore, and in the Presidencies of Bengal and Madras.
2. Describe, as fully as you can, the provisions of the Treaty of Salbye; and, more concisely, the circumstances under which it was negotiated, and the state of things then existing in the Territories of the several parties to the Treaty.
3. Give a summary view of the state of India, to the South of the Nerbudda, at the time of the assumption of the Government by Lord Wellesley; stating the principal matters then calling for attention, and the measures taken by the Governor-General during the first two years of his administration.
4. Describe the careers of Nizam Ali, successor to Salabut Jung at Hyderabad; and of Vizier Ali, of Oude.
5. Give a brief geographical description of the Territories (in the Madras Presidency) acquired by the British Government during the administrations of Lord Cornwallis and Lord Wellesley, mentioning any places therein which were associated with important military transactions of the period.

FINAL EXAMINATION. CANDIDATES OF 1876.

6. Give a geographical description of the Territories transferred, during the administration of Lord Wellesley, to the British Government, by the Nawab of Oude and by Sindia respectively.
7. Describe the courses of the Rivers Bannas, Chumbul, and Saone; mentioning any places or facts of interest connected with any of them.

HISTORY AND GEOGRAPHY OF INDIA.

CLAUDE ERSKINE, Esq.

Monday, 10th June 1878. 2 P.M. to 5 P.M.

1. Describe fully the provisions of the Treaty of Sirji Anjengaon (December 1803) and the relative positions at that time of Sindia, Holkar, and the Government of Lord Wellesley. Add an account of the relations of Sindia and Holkar to the Government of India during the two succeeding years, and of the Treaty concluded (December 1805) with Holkar, during the administration of Sir G. Barlow.
2. Give a concise account of the objects and results of the military operations against the Pindarees and Mahrattas during the administration of Lord Hastings. State also what you know of the Treaties then concluded between the Government of India and the Princes of Rajputana and Central India.
3. Describe fully the Indian Careers of Sir D. Ochterlony and Sir J. Malcolm.
4. Give an account of the measures of internal improvement carried out during the Government of Lord W. Bentinck, and of the reforms affecting India, effected or attempted, by means of legislation in England, during the same period.
5. Give a concise account of the transactions affecting Sindia's Dominions and the Punjab during the administrations of Lord Ellenborough and Lord Hardinge.
6. Give a geographical description of the Provinces of Bundelkand and Assam. When and how were they acquired by the British Government?
7. Describe the course of the River Sutlej, and mention any places or events of interest that are connected with it. Describe also the Jullundur Doab.
8. Give a description of a journey by land along the coast from Madras to Calcutta, mentioning briefly the places of historical or general interest on the route.

POLITICAL ECONOMY.

Professor J. E. THOROLD ROGERS.

Tuesday, 11th June 1878. 2 P.M. to 5 P.M.

[*Candidates are advised to attempt all the Questions.*]

1. It is said that taxes on capital are unwise because they tend to diminish capital. Examine this opinion by (1) the definition of capital, (2) the incidence of taxation.

FINAL EXAMINATION. CANDIDATES OF 1876.

2. Compare the views of Adam Smith, Mill, and Macculloch on property in land, and the power of settling it.
3. What was the purpose of the English Corn Laws? How was it that they failed of securing the objects of those who enacted and supported them?
4. What are the economical consequences which ensue from the adoption of a protective policy in "young" countries?
5. What, according to Mr. Mill, are the causes to which the great comparative opulence of modern societies is due? Does his statement seem to be exhaustive?
6. State and examine Mr. Mill's opinion as to the policy of dividing the Issue from the Banking Department of the Bank of England.
7. If it be true "that demand for commodities is not demand for "labour," how do you account for the phenomena of high profits and high wages on the occurrence of great activity in manufactures and trade?
8. Show that the functions of government in maintaining and assisting economical progress vary in extent with the character of the people whose affairs are administered.
9. Trace the effect of the English Poor Law on the economical position of the labourer.
10. What were the chief purposes aimed at by the colonial system which Adam Smith examined and criticised?

POLITICAL ECONOMY.

Professor J. E. THOROLD ROGERS.

Wednesday, 12th June 1878. 10 A.M. to 1 P.M.

[*Candidates are advised to attempt all the Questions.*]

1. Is the reason ordinarily given for the creation of a public debt, viz., "That the benefit of the present outlay is shared or supposed "to be shared by posterity," the sole or even the principal reason why loans are contracted?
2. Is it possible that such an amount of capital can be expended on permanent improvements as to seriously diminish the fund from which labour may be maintained?
3. To what extent are calculations as to the accumulated wealth of a nation any aid towards an estimate of its power to bear extraordinary taxation?
4. Illustrate the process by which taxes paid in the first instance by the person on whom they are imposed may be shifted with varying degrees of success on others.
5. What are the reasons which make the success of agriculture an object of primary interest in estimating the industrial powers of a community?
6. Trace the effect of "short time" on wages, profits, and prices.
7. In what manner can bankers help or hinder the development of a commercial panic?
8. It is said that the best kind of finance is not always the best possible kind of finance. Expand and illustrate this statement.

FINAL EXAMINATION. CANDIDATES OF 1876.

9. What would be the immediate effects of a rise in the price of gold on profits and discounts?
10. If it could be proved that a serious deficiency in the supply of a principal necessity of industry (say coal) was imminent, what phenomena would accompany the occurrence and progress of the scarcity?

HINDÛSTÂNÎ. (1.)

FITZEDWARD HALL, Esq., D.C.L.

Thursday, 13th June 1878. 10 A.M. to 1 P.M.

I.

a. State the various uses of the locative case.
b. Exemplify copulative compounds.
c. What is denoted by the adjectival terminations *-âna, fâm, -gân, -î, -mand*, and *wâr*.
d. Specify the pronominal adjectives of quantity.
e. Explain the use of the precative mood.
f. Give instances of reiterative verbs.
g. What Arabic prepositions, separable and inseparable, have you met with in Urdû?
h. Construct sentences involving the direct oration.

II.

For re-translation into Urdû:

a. When it was evening, a eunuch summoned me, and conducted me to the palace. Arrived there, I saw nobles, men of learning, and persons distinguished for piety, in attendance. I joined the assemblage, and took my seat. In the meantime the table-cloth was spread, and provisions of divers kinds, sweet and salted, were served to us. All fell to eating; and they made me keep them company. When the meal was over, a nurse came from the inner apartments, and asked after Bahrawar, and directed him to be called. The pursuivants forthwith brought him.

b. The Hindus look for final salvation, in case their bodies go to decay in the river Ganges. It was because of this, that the Pâṇḍavas repaired thither to die. Near Mount Himâchala the banks of this river are so lofty, near together, and precipitous, that one can hardly see the stream from them, and there is no crossing it by boat. In order to pass from one side of it to the other, cables are stretched across, and made fast to trees. It is in this way that worshippers of Badarînâtha reach the temple dedicated to him. However, to those who are not accustomed to the use of bridges of this description, it is a most formidable undertaking to traverse them.

FINAL EXAMINATION. CANDIDATES OF 1876.

HINDÛSTÂNÎ. (2.)

FITZEDWARD HALL, Esq., D.C.L.

Thursday, 13th June 1878. 2 P.M. to 5 P.M.

For translation into English :

a مَين بڑا سَوداگر تها * اِس سِن مين تِجارت كي سبب هفت اِقليم كِي سير كِي اَور سب پادشاهون كِي خِدمت مين رسائي هُوئي * ايك بار يهه خِيال جِي مين آيا كه چارون دانگ مُلك تو پِهرا ليكِن جزيرهٔ فرنگ كِي طرف نه گَيا اَور وهان كي پادشاه كو اَور رعِيّت و سِپاه كو نه ديكها اَور رسم و راه وهان كِي كُچهه نه دريافت هُوئي * ايك دفعه وهان بهِي چلا چاهِيُـي * رفِيقون اَور شفِيقون سي صلاح ليكر اِرادهٔ مُصمّم كِيا اَور تُحفه هِدايا جهان تهان كا جو وهان كي لائِـق تها لِيا اَور ايك قافِله سَوداگرون كا اِكٹّها كركر جهاز پر سَوار هوكر رَوانه هُوا * هَوا جو مُوافِق پائِـي كئِي مهِينون مين اُس مُلك مين جا داخِل هُوا * شهر مين ڈيرا كِيا * عجب شهر ديكها كه كوئي شهر اُس شهر كِي خُوبِـي كو نهِين پُهنچتا * هر ايك بازار و كُوچي مين پُخته سڑكين بنِي هُوِين اَور چِهڑكاؤ كِيا هُوا * صفائي اَيسِي كه ايك تِنكا كهِين پڑا نظر نه ايا كُوڑي كا تو كيا ذِكر هَي * اَور عِمارتين رنـگ به رنـگ كِي اَور رات كو رستون مين دو رسته قدم به قدم روشنِي * اور شهر كي باهر باغات كه جِن مين عجائِب گُل بوٹي اَور ميوي نظر آئي كه شايد سواِي بِهِشت كي كهِين اَور نه هونگي * جو وهان كِي تعرِيف كُرون سو بجا هَي *

b تهانيسر ايک پراني بستي هي سِرهند سي تين كوس پر جنوب رو * قريب اُس كي كوركهيت نام ايک بڑا تالاب هي * هِندي كِتابون مين اُس كو نافِ زمين لكها هي * اور پيدايِش كي اِبتدا بهي هِندوؤن كي نزديک اُسي مكان مين هوئي هي * حاصِل يهه هي كه اُس كو بڑي تِيرتهه جانتي هين اور نهاتا اُس مين ثوابِ عظِيم خُصوصاً سورج گهن

FINAL EXAMINATION. CANDIDATES OF 1876.

مين * كيونكه اُس روز دور دور سي گروه گروه رنڈي مرد عام خاص بلكه سب چهوٹي بڑي انكر وهان جمع هوتي هين اور نقد و جِنس انواع و اقسام كي ظاهِر و مَخفي خَيرات كرتي هين * هرچند كه اُن مين كوئي كَيسا هي بخَيل يا مُفلسِ هو پر اپني قدر و طاقت سي زيادہ دان پُن كرتا هي * بلكه سِوائي تالابِ مذكور كي اٹهتاليس كوس تلك جِتني جِهيلين تالاب حَوض كوئي اَطرافِ شهر كي اور وي مكانات جِن كي نزديك سرستي نِدي بهتي هي بلكه وي بَيٹهكين بهي كه اَكلي مُنيون كي نام سي مشهور هين اور قديم كِتابون مين مسطور اُن سب كو تيرتهه جانتي هين * اِسي سبب پانڈو اور كورو كه پيشوا هندِوؤن كي تهي آپس مين لڑكر وهين ماري گئي *

٥ تيس كوس شهرِ مذكور سي جُنوب كي طرف دامنِ كوه مين گيا ايك بڑا معبد هنود كا هي * دور دور سي هِندو وهان آكر اپني جد و آبا كي ارواح كي لئي دان پُن كرتي هين * خُصوصاً چلّي كي جاتري مين جب آفتاب قَوس مين آتا هي هزارون اشخاص مرد و زن اُس مكان مين نزديك دور سي آكر جمع هوتي هين * پهر منتر پڑهه پڑهه ترپن سرادهه سي اپني مردون كي روح كو مسرور كرتي هين اور اُس عمل كو اُن كي نجات كا مِوجب اور اپني بهترين عبادت جانتي هين * قريب اُس كي سنگِ مرمر كي كهان هي * بيشتر وهاں ظُرف و زيور سنگِ مذكور كا بناتي هين اور اپني دستكاري كي خوبيان دكهاتي هين * كاغذ بهي اَرول اور بهار مين بِهتر سي بِهتر بنتا هي *

FINAL EXAMINATION. CANDIDATES OF 1876.

HINDÛSTÂNÎ. (3.)

FITZEDWARD HALL, Esq., D.C.L.

Friday, 14th June 1878. 10 A.M. to 1 P.M.

I.

For Translation into English:

a ایک پادشاہ سوَار تھا کِشتی مین اور ایک غُلامِ عجمی بھی حُضور مین حاضِر تھا * لیکِن غُلام نی کبھی حالت دریا کی نہ دیکھی تھی اور صُعوبتین کِشتی کی نہ اُٹھائین تھین * بی اِختیار رونی لگا اور ماری ڈر کی کانپنی * هرچند تسلّي کرتی تھی مُطلق چُپ نہ رهتا تھا * پادشاہ کا مِزاج عیش سی نِہایت منغّص هوا اور اِس بات کا چارہ کُچھ نہ هو سکا * اِتّفاقاً ایک حکیم بھی اُسی کِشتی مین تھا * اُس نی پادشاہ کی جناب مین عرض کیا کِہ اگر اِرشاد هو تو مین اِس غُلام کو ایک وضع سی ابھي چُپ کرواؤن * پادشاہ نی فرمایا کِہ یِہہ امر نِہایت هماری خُشنودی اور رضامندی کا هی اور موجب زیادتی الطاف کا واسطی تُمهاری بھی هوگا * یِہہ سُنتی هی حکیم نی کہا کِہ هان اِس غُلام کو جلد دریا مین ڈال دین * بموجِب اُس کی حُکم کی لوگون نی اُس کو دریا مین گِراکر دو تین غوطی دئی بعد اُس کی موئی سر پکڑکر کشان کشان ناو کی پاس لی آئی * غُلام نی هاتھہ سی سُکّانِ کِشتی کو پکڑا اور ایک کونی مین آکر چُپکا بیٹھہ گیا *

b کہا مین نی کہ نقل اُس لومڑي کی مُناسِب تیری حال کی هی جو بھاگتی تھی اور گِرتی تھی اور اُٹھتی تھی * کِسی نی پوچھا اُس سی ایسی کونسی آفت هی جو موجِب اِتنی دهشت کا هوئی * کہا اُس نی سُنا هی مین نی کہ اُونٹون کو بیگار پکڑتی هین * حاضِرون نی کہا ای گدھی اُونٹ کی تیُن تُجھی کیا مُناسبت اور تیری تیُن اُس سی کیا مُشابہت * بولی وہ چُپ رہ کہ اگر دشمن واسطی غرض کی کہہ

FINAL EXAMINATION. CANDIDATES OF 1876.

دین کہ یِہہ بھی بچّہ شُتر ھی اور پگڑی جاؤن تو کِس کو اندیشہ میری چھوڑانی کا ھوگا اور تجسّس احوَال کا میری کون کریگا *

ایک دِن اُس سلطان کی غُلامون مین سی ساعِد نام اُس بیابان مین اِدھر اُدھر سیر کرتا پِھرتا تھا * ناگاہ اُس کی نظَر کتنی لکڑھارون پر کہ لکڑیون کی بوجھی لِئی جاتی تھی جا پڑی * اُن سی پوچھا تُم کون ھو اور یہہ لکڑیان کہان لِیُی جاتی ھو * اُنھون نی جَواب دیا کہ ھم شہرِ شرقستان کی لکڑھاری ھین * یہی ھمارا کسَب ھی اِسی سی ھماری لڑکی بالی پلتی ھین * اُس نی کہا کہ آج تُم یہہ گٹّھی میری آقا کی باورچی‌خانی مین لی چلو * دولت‌خانہ اُس کا نزدیک ھی * اُس نی یہان ایک شہر ھی بسایا ھی * واجبی قیمت ملیگی بلکہ بُہت سا اِنعام پاؤگی * اُنھون نی کہا ھماری تمام عمر اِسی کام مین کٹی لیکن کبھی آبادی کا یہان نشان نہ دیکھا نہ سنا * ساعد نی کہا کہ ٹک ایک تُم آگی بڑھکی دیکھو * اگر میری کہنی کا کچھہ اثر ظاھر ھو تو بہتر * نہین تو تمھاری پھر آنی کا کوُی مانِع نہ ھوگا * لکڑھاری انعام کی لالچ سی ساعد کی آگی ھو لیئی * پر تھوڑی سی دور جاکر سب گی سب یکبارگی پُکار اُٹھی کہ ای میان تو ھمین کیون اِس آگ مین جھونکنی کو لی‌چلا ھی * بس ھمین معاف کر ھم نی بھر پایا * ساعِد نی کہا یہہ شعلِ آگ کی نہین * حویلی کی جواھِرات کی چمک ھی * تُم ھرگِز اندیشہ نہ کرو اور میری ساتھہ چلی آو *

II.

For translation into Urdû :

A frog had its home on the margin of the sea. Day and night it never ceased to chant the praises of the ocean. It was to the ocean, so sang the frog, that it owed the graces of its mind, and the power whereby its body had attained to perfection. Wherever its thoughts turned, wherever its eyes were fixed, there stretched the boundless

FINAL EXAMINATION. CANDIDATES OF 1876.

immensity of the ocean, filling it with awe and unspeakable delight. These praises, sung without ceasing, were heard by certain fishes, and excited in them an ardent desire to become acquainted with this marvellous ocean. They determined to set forth, and never to rest from their travels until they had discovered the object of their desires. They had fruitlessly traversed an immense space, when they were entangled in a fisherman's net, and drawn out of the water. By dint of desperate struggles, they freed themselves from the meshes, and fell back into the water. Then, for the first time, they perceived what that ocean was of which they had been in search.

TELUGU. (1.)

J. GOLDINGHAM, Esq.

Thursday, 13th June 1878. 10 A.M. to 1 P.M.

1. Translate the following into Telugu, and point out what strikes you as peculiarities belonging to the language:
   a. At present having become weakened by the medicines of the doctors, it has come to pass that I cannot rise from the place where I sat down. Such exhaustion having come on, it is very troublesome.
   b. I am a poor man—Should I go outside, it costs much. It is your duty to protect my family.
2. Show the uses of various verbal affixes in construction in the following sentences:
   a. Because you spoke to him I got that situation.
   b. While I spake did you not hear.
   c. He came, while I was at work, and so I did not see him.
   d. I arrived while you had gone away to that village.
   e. Have you ever heard him while he was singing?
3. How would you express "*as soon as*" in Telugu? Give two instances.
4. Show how "*before—before that*"—are rendered in Telugu in the following sentences:
   a. *Before* I had taken my food, all had risen and gone.
   b. *Before that* boy was born, his father died.
5. Translate the following in further illustration of adverbial affixes:
   a. *Since* I came here, many persons came to the house in which I am living.
   b. I will stay here *until* you call.
   c. *Although* he came, I did not see him.
   d. If the carpenter *is making* that box well, I will give him two rupees—if otherwise I will not give anything. (Vadla—vādu=carpenter).
   e. Last night a great wind blew, *so as to make* many trees fall.
6. Translate the following in illustration of the rules regarding noun sentences in Arden's grammar:
   a. Tell (me) what word you did yesterday.
   b. Whether he wrote that letter or not is doubtful.
   c. That he did not pay that money is known to all.
   d. When I called him, he said I will not come.
   e. He said that he would go to-morrow.

FINAL EXAMINATION. CANDIDATES OF 1876.

7. Express the following fractions in Telugu, both in symbols and in words:

$\frac{1}{4}$	a quarter.
$4\frac{1}{4}$	four and a quarter.
$\frac{1}{2}$	a half.
$4\frac{1}{2}$	four and a half.
$\frac{3}{4}$	three fourths.
$4\frac{3}{4}$	four and three fourths.

Express also the following in symbols:

12987.
13456.
20579.

8. In written sentences in Telugu, where words run into each other, certain rules (sandhi) are observed to prevent incongruity of sound. State briefly what those rules are, and give an instance or two in illustration.

Re-translate into Telugu:

a. After Mr. Mason became collector of this Zillah, both the Sayer Darogah and the Peshear, departing from the custom (māmool) of examining and passing any goods from outside (places) which have paid duty, take money as a bribe and then let the goods pass, and in this way disturb us. In consequence of the Hoozoor employés (Mootasaddeelu) not allowing me to come there (*i.e.*, to the Collector's cutcherry), by the persuasion of the Peshear, I wrote a petition, and paying the postage, put it into the post office (tappāl) at Mangalgerry. That Arzee reached, but as I therein stated that I was ready to prove my allegations, the employés did not read out the petition, and misled his honour.

b. I will tell the truth. I will tell the whole truth. I will tell nothing but the truth.

TELUGU. (2.)

J. GOLDINGHAM, Esq.

Thursday, 13th June 1878. 2 P.M. to 5 P.M.

Translate into English:

[మహారాజ[శీ సీ - బీ - [బ్రౌ[యిస్క్వయరు కలక్టరు జిల్లా గుంటూరు వగైరాగారి సముఖానకు,

అద్దంకి సీమలో చేరిన వంకాయలపాటి కాపురస్థుడైన కంది పద్మి రెడ్డి [వాసుకొన్న అర్జీ యేమంటే.] ఏనుకొండ సీమలో చేరిన పోలూరు ముఠాలో వుండే వూసపాటిలో, వేను బహుదినములనుంచి పాయకారిని వ్యవసాయము చేస్తూ, కదీం పాయకారి అని అనిపించుకొని వుండేది. యీ సంవత్సరము నేను చేసిన పాలములో

FINAL EXAMINATION. CANDIDATES OF 1876.

కొద్దిగా పండినది. నేను చెల్లించేసిస్తు హెూ|| ౧౩౫౦ గనక, చేలో పండిన పంట వద్ద వుండి మహస్సూలు చేయిస్తే, ఖం౫౦౫౦ అయ్యేవరకు, గుమాష్తా యెరుకమీదనున్ను, దివాణపు మహస్సూలుదార్ల యెదటనున్ను, కరణాలు యిరుగోరు దాఖలు చేసుకొని, తతిమ్మా బాకీ హెూ|| ౫|౭ తెమ్మనిన్ని, చొప్ప కూడా అమ్ము మనిన్ని, ముద్దర్లు వేయించి, తహశ్శీలుదార్లను వొప్పగించి, బండలు యెత్తించి నన్ను చాలా నిర్బంధ పెట్టినందున, ఆబాధ పడలేక, యెంతదూరము విచారించినా పరపతి పుట్టలేదు. అంతట, చొప్ప కూడా అమ్మితే, యెద్దులు బ్రతుకవనిన్ని; యెద్దులున్ను దివాణపువే, మేమున్ను దివాణపు రహితులమే అనిన్ని, చొప్పమాత్రము విడిచిపెడితే, ముందు వ్యవసాయము చెయ్యడానకున్ను, మేము జీవించడానకున్ను, దివాణముపైకము చెల్లించడానకున్ను, చోటు వుంటుస్న దనిన్ని, చెప్పుకొంటే, నీయెద్దులు చస్తేనేమి? నీవు చస్తేనేమి? చొప్ప అమ్మించేది అమ్మించేడే అని, చొప్పమిదముద్దరు వేయించి, నన్ను నకలబాధలు పెట్టేవరకు, ఆబాధలు పడలేక, తమ సముఖములోకి వచ్చి మనివి వ్రాసుకొనేది యేమంటే; చెల్లుపోగా బాకీవరహాలు యీసంవత్సరానికి నిలుపు చేయించే లాగుననున్ను, ముందు వ్యవసాయము చేసేనిమిత్తము, యెద్దులు బ్రతికి వుండడమునకు, చొప్పదంటు అమ్మించకుడా వుండేలాగుననున్ను, హుకుము దయచేయించ వలెనని వేడుకొంటూ వున్నాము. దివ్యచిత్తానకు తేవలెను.

పద్మిరెడ్డి కలం ముట్టిన నిశాని.

హెడ్డాపుపోలీసు దగ్గిర యిచ్చిన వాఙ్మూలము,

౧ సాక్షి.

ఆన ౧౮౪౩ డోనంవత్సరంది ౨ జనవరి శుభకృకునామ సంవత్సర పుష్య శ్ధు ౨ సోమవారం.

నా పేరు కాకుమాను రంగప్ప; తండ్రిపేరు బబివిశెట్టి; &c.

సవాలు—నీవు వాఙ్మూలము యే భాషతో వ్రాయిస్తావు?

జవాబు—తెనుగు భాషలో వ్రాయిస్తాను

స. తాణాసరాబు కొత్త వెంకటనరుసు దగ్గిరికి నాణ్యము చూపించ డానకు నీవు తేచ్చిన తవ్వనాణ్యపు సంబంధమైన బేడలు గంన్ని, అణాలు ౩౬నున్న, యెక్కడివి.

జ. ఈ రోజు సూ యం[తము ఆరు ఘంటల వేళ నేను నా యింటి దగ్గిర వుండగా, చిలకలూరుపేట కాపురస్థుడయిన కోమటి పసుపుర్తి లక్షయ అనేవాడు నా తావుకు వచ్చి, నాకు మూడు వర హాలు కావలసి వున్నది; యేలాగున యిస్తావని అడిగినంత్లో; హొన్నగిరు ౪ అణాలు ౬-౦ చొప్పున రూపాయలు యిస్తే, యిస్తానని చెప్పినాను. అతడు అందుకు నంగతించి యెనిమిది రూపాయలున్న గం బేడలున్న ౩౬ అణాలున్న తెచ్చూ ఆ [పాప్తికి నేబులున్నయి చ్చినందున, బేడల అణాలయెక్క నాణ్యము నాకు తెలియక, నరాభుకు చూపించి తీసుకొంటా నని, నదరు లక్షయచేత నే ఆ బేడలు అణాలు పట్టించుకొని తాణా కచేరికి వచ్చి, సరాపు వెంకట నరుసుకు చూపించినంత్లో; అతడు చూచి, ఆ గం బేడలున్న ౩౬ అణాలున్న తప్పనా ణ్య సంబంధమైనవని చెప్పినాడు. గనక, హెడ్డాపు పోలీసుగారి తావున దాఖలు చేసినాను. నాకు బేడలు అణాలు యిచ్చినది కచ్చేరి యెదట హాజరుగావున్న యీపసుమర్తి లక్షయ్యే.

ప. నీతావుకు వరహాల నిమిత్తం పసుమర్తి లక్షయ వొక్కడే వచ్చినాడా? యింకా యెవరయినా కూడా వచ్చినారా?

జ. లక్షయ్యానున్న, యిప్పుడు కచ్చేరి యెదట హాజరువున్న మనిషిన్న, యిద్దరు కూడా వచ్చినారు.

స. ఆ మనిషి పేరు యేమి?

జ. తుమ్మగోటి తాణా సరాపు అయిన చిలకలూరిపేట కాపురస్థుడు పసునుర్తి పేరయ. మర్తబు.

రంగవ్వ[వాలు.

మహారాజశ్రీ గోబావరిడిష్ట్రిక్టు జాయంటు మేజుస్ట్రేటు
నారి సము భానకు.

రామచంద్ర పురం తాలూకా సబ్ మేజుస్ట్రేటు కౌశుళపరపు సేషయ్యవ్రాసుకొన్న అర్జీ.

అలమూరు సబ్ మేజుస్ట్రేటుకోరినప్రకారం కేలా లు ఖావా బట్టీల వయినం తెలిశే జాపితాకు యక్ స్ట్రాక్టు వెంటనే పంపించర ఆలశ్యము చేయడముకు కారణం తెలియ చేయ వ్లలశినదని కిందట నేలది 25 తారీఖున వెం 307 రున తేటు సబ్ నేజస్ట్రేటు పేరహు. కుంపా దరు చేయింది వున్నారూ.

యిందున గురింది విచారిత్తనే సదరహీ జాపితాగ యిరు విలియా పడడచేత వెతికింబ కనుక్కుని ది 13 ఆ గష్టు తేదిని యక్ స్ట్రాక్టు వ్రాయింది పంపించ బడ్డట్టున్ను అందువల్లకుంచం ఆలశ్యమ్గయినట్టున్ను తలయవస్తున్నది గనుక యీసంగతి విశదర నిమిత్తం మనివి వ్రాసు కున్నాను—దివ్యబత్తానకు తేరతనూ.

ది 27 అక్టోబరు ఆ 186 ంసంశి
మహాంద్రాక్షారామ
కౌ॥ రెంక దాపు
కిరస్తాదారు.

కౌ॥ సేషయ్య
పే॥ స॥ పేజస్ట్రేటు

TELUGU. (3.)

J. GOLDINGHAM, Esq.

Friday, 14th June 1878. 10 A.M. to 1 P.M.

To be translated into English:

ముద్దాయి వద్ద పుచ్చుకొన్న వాఙ్మూలం.

The date, as usual.

నా పేరు తాతయ్య; తండ్రిపేరు గండ్రప్ప. &c.

Question about language, as usual.

[సి. సర్యాది అయిన చేరెపూడి కోటప్ప సా॥ కం తడు, నీమీద దాఖలుపిన చార్జీ చదివి వినిపిస్తాము, విను; యిందుకు యేమి జవాబు చెప్పతావు?

ఉ. విన్నాను; భర్యాది చార్జీలో [వాసుకొన్న [పకారం, అతని తాలూకు ఆవుపెయ్య నాదగ్గిర లేదు. నాగొన్లల్లోకి రాలేదు. ఇదివరకు సంవత్సరము కిందట వొకపారి యీభి ర్యాది నా కాపురన్థళమైన వరిమికి వచ్చి, నా గొన్లల్లో తన ఆవుపెయ్య వున్నదనిన్ని, దాన్ని యిప్పించపలసిన-దనిన్ని అడిగితే, పెయ్య నావద్ద లేదని అన్నాను. అం-తట చక్కా పోయినాడు.

[ప. భర్యాది మీ [గామానకు వచ్చి, నీ గొన్లల్లో తన తాలూకు పెయ్య వున్న దని, ఆనవాలు పట్టి అడిగిసప్పుడు, అది భర్యాదిది కానట్టునున్న, నీదే అయినట్టునున్న, నీవు అన్న పిమ్మట, దాన్ని దేవాలయమందు కట్టినేపి, [వమాణం మీద యెవరైనా వొకరము తీసుకొందామని చెప్పితే, అందుకు నీవు వొప్పుకపోయినట్టు తెలియవచ్చినది. యీ సంగతి యెటువంటిది? భర్యాది అప్పుల్లో తనదని, ఆన-వాలు పట్టిన పెయ్య యిప్పుడు యెక్కడ వున్నది?

ఉ. అతను మా [గామానకువచ్చి, తన పెయ్య నా పశువులకో వున్నట్టు చెప్పి, యిప్పించవలసినదని అడిగినాడు గాని, భలాని పెయ్య తనదని చూపించనునున్న లేదు. దాన్ని దేవాలయమునకు యెదట కట్టివేసి [వమాణం మిద తీసు-కొందామని అననునున్న లేదు. నాతాలూకు అప్పుడు వున్నగొళ్లు అన్ని యివ్వడునున్న నాతావుననే వున్నవి. యిదివరకు సుమారు 8 రోజుల కిందట, భర్యాది తాణా జవానుతో కూడా మా [గామానకు వచ్చి, నాపశువుల నన్నిటిని చూచుకొని, అందులో తనతాలూకు ఆవుపెయ్య లేదని, చక్కా వచ్చినాడు. మునుప్ర చూచిన పశువుల నే యిప్పుడునున్న చూచి వుండిన్ని, మునుపు తనపెయ్య నా గొన్లల్లో వున్నట్టు ఛార్జి యివ్వడమునున్న, యిప్పుడు లేదనడమునున్న, యెటువంటిదో నాకు తెలియదు.

తాతయ్య నిశాని.

FINAL EXAMINATION. CANDIDATES OF 1876.

నేను శేద్యపు పనులు జరిగించుకోలేనని యెన్నడు యే శైతులోనున్న [గామ యజమానివగైరాలతోనున్న చెప్పినదే లేదు. తహశీల్దారుడు యీ కృష్ణమకు ఓళవు అయి, తమతో అన్నటా మరుగు పడ మనవి చేశి నాడేగాని, యితరం కాదు. నాతొలూకు మెట్ట మాగాణి పాలాలు వచ్చే సంవత్సరమునుంచి, నేనేన్యతహాగా వ్యవహాయంచేయించుకొంటువాన్నాను. గనుక, సదరు కృష్ణమ పేరిట పుట్టివుండేల[కమవు పట్టాను తోశివేయించి నాపేరట తాజా పట్టా పుట్టించవలెనని కోరుతున్నాను. నేను కేవలం బీద వాణ్ణి; యీ జీవనంతప్ప యితర జీవనం లేనివాణ్ణి; నాఅన్నంతీశి మరి వొకరికి యివ్వడము న్యాయముకాదు. గనక, తమరు [గామ యజమాని మొదలయినవారిని విచారించి తెలుసుకొని, న్యాయ[పకారంనా వట్టానా కుయిప్పించవలెనని కోరుతున్నాను. చిత్తగించవలెను.

ఇట్లు సం నంవత్సరం జనవరి ఇం తేది.

సూరారెడ్డి [వాలు.

To be translated into Telugu:

a. I had made up my mind to take a house. A person in the street in which I lived came to me, and I asked him if he knew of a suitable house. He pointed out one, which I examined. I told him that I did not like it. The situation, I observed, was not good—the house is small, and it is damp. He then said he could show one that was suitable. It was capacious, and in a good place for business. The rent was 100 rupees a month, and if taken for four or five months it would be less. The house appeared to me suitable. It appeared as if it required repairs. The man said if you will point out what you wish it shall be done.

b. There was a king in a certain town. Consulting with his ministers, he said, all kings do cutcherry (office work) in the daytime and sleep at night—if we do as they do, it is not right. He determined to do cutcherry at night, and sleep during the day. Accordingly, not only did he command that all people under his authority should sleep all the day and eat and perform all work during the night, and that the police should patrol in the daytime, but he also said, I will punish those who do not so.

FINAL EXAMINATION. CANDIDATES OF 1876.

BENGALI.

W. S. SETON-KARR, Esq.

Monday, 17th June 1878. 10 A.M. to 1 P.M.

GRAMMAR.

1. Decline স্ত্রী and সম্পদ in the singular and plural.
2. Give the feminine of যুবা, ভগবান, and তনয়.
3. Give two examples of the use of রূপ in composition.
4. Give the cardinal numbers from 1 to 10 inclusive, and the Bengali for the second, the seventh, three and a half, and two and a half.
5. Give the Bengali equivalent for the following: of what, their own, from this, something, anyone, some one else, how many.
6. Write out the future indicative and the pluperfect tenses of কহিত.
7. Express the words: if, afterwards, many times, never, sometimes, or, although, if not.
8. Give three examples of compound adjectives.
9. *Translate into Bengali:*
   (*a*) What is your name and your profession, and why have you come here?
   (*b*) In the whole country there is not one Brahman.
   (*c*) When he arrived on the bank of the river, the boat was not ready.
   (*d*) At that time a great calamity happened.
   (*e*) I have no friendship with those persons.
   (*f*) Justice, mercy, and cherishing of good men, this is the duty of kings.
   (*g*) You have said many things, but you have given no proof of any one thing.
   (*h*) It is better to go to the jungles than to dwell in a city full of wicked men.

Retranslate into Bengali:

Having become acquainted with the condition of Duval, his efforts at learning to read and write, and the extent of his progress, this person was much pleased, and abundantly rewarded Duval. At the time of his departure, he said, "You will come and see me every now and then." Whenever Duval went to see him, this person gave him a few rupees. Duval did not spend this money on other things: all he did with it was to buy books, and the same person now and then would give him books. By this favourable means Duval collected many books and read many books.

In this way Stone, having entered the university, in a short time became extremely learned in various Sciences. All at the university, whether professors or scholars, were in the habit of praising his intellect and his learning. The professors thought that the mere fact of his being a scholar redounded to the credit (was the praise of) the university. And his fellow students thought it an honour to read with him.

FINAL EXAMINATION, CANDIDATES OF 1876.

Hutton, in this way, through endless trials, by his own effo labour, gained learning, renown, and wealth, and departed this his ninety-ninth year.

BENGALI.

W. S. SETON-KARR, Esq.

Monday, 17th June 1878. 2 P.M. to 5 P.M.

Translate into English :

শকুন্তলা রাজার এই বাক্যে লজ্জিতা হইলেন, কিন্তু রাজার রূপ ও স
রাগি দর্শনে তাঁহারও মনে প্রণয় সঞ্চার হইয়াছিল, অতএব অনায়াসে প
সম্মতা হইলেন। তদনন্তর শুভক্ষণে গান্ধর্ব-বিধান দ্বারা দুষ্মন্ত রাজা শ
বিবাহ করিলেন। পরে ধর্ম্মারণ্যে কিয়ৎকাল মুনিকন্যার সহিত একত্রে অবস্থিতি করিয়া, স্বহস্তস্থিত স্বনামমুদ্রিত এক অঙ্গুরীয় প্রদান পূর্ব্বক স্ত্রীয় রাজধানীতে গমন করিলেন।

শালিবাহন অবধি যাদোরাও ও দেবরাও পর্য্যন্ত যে সকল রাজা ছিলেন তাঁহাদিগের কোন বৃত্তান্ত লিখিত নাই। যখন মুসলমানেরা মহারাষ্ট্র দেশ জয় করে তখন, যাদোরাও দেবরাও এ দেশের অধিপতি ছিলেন। মুসলমানদিগের সময়ে মহারাষ্ট্রীয়দের প্রাদুর্ভাব অধিক ছিল না। ক্ষুদ্র ক্ষুদ্র মহারাষ্ট্রীয় রাজা ছিলেন বটে, কিন্তু সকলই মুসলমানদিগের অধীন এবং করপ্রদ ছিলেন। শিবজী অবধি মারহাট্টাদিগের শ্রীবৃদ্ধি।

মান্যবর শ্রীযুক্ত সোমপ্রকাশ সম্পাদক
মহাশয় সমীপেষু।

সবিনয় নিবেদনমিদং—

জেলা নদীয়ার অন্তর্গত নাকাশীপাড়া থানার অধীন মুড়াগাছা নামে একখানি পল্লীগ্রাম আছে। এখানে দুর্ভিক্ষের আত্যন্তিক প্রকোপ হইয়া উঠিয়াছে। কিন্তু এখানকার অশেষ গুণান্বিত দেশহিতৈষী জমীদার শ্রীযুক্ত বাবু জগচ্চন্দ্র মুখোপাধ্যায় মহাশয় এই ভয়ানক ব্যাপার অবলোকন করিয়া দরিদ্র ব্যক্তিদিগের

FINAL EXAMINATION. CANDIDATES OF 1876.

আহারের জন্য গবর্ণমেণ্ট হইতে একটী রিলিফ্‌ফণ্ড এই গ্রামে স্থাপন করিবার অভিপ্রায়ে জেলা নদীয়ার জাইণ্ট মাজিষ্ট্রেট শ্রীযুক্ত জি গ্রেহাম সাহেবের নিকট প্রস্তাব করেন, পরিশেষে উক্ত সাহেব মহোদয় তাঁহার প্রার্থনা পূর্ণ করিয়া ঐ গ্রামে একটী রিলিফ্‌ফণ্ড করিতে আদেশ দিয়া প্রায় ২ দুই হাজার টাকা গবর্ণমেণ্ট হইতে দরিদ্রদিগকে আহারের জন্য অর্পণ করিয়াছেন। এক্ষণে উক্ত হিতৈষী জমীদার মহাশয় উক্ত দরিদ্র ব্যক্তিদিগকে এক একখানি লাল টিকিট দিয়া প্রায় দুই হাজার লোককে দিন দিন আহার দিতেছেন, সম্পাদক মহাশয়! যদ্যপি এইরূপ এখানে না হইত, তাহা হইলে কি প্রকার ভয়ানক কাণ্ড ঘটিয়া উঠিত তাহা বলা যায় না।

কৃষ্ণনগর কালেজ
২৩ শ্রাবণ ১২৭৩

একান্ত বশম্বদ
শ্রীশরচ্চন্দ্র চট্টোপাধ্যায়

Translate into Bengali:

In the village of Kantonuggur there dwelt in former times, an old Kayastha named Madhu Sudan Dutt. This man enjoyed an ancestral piece of land of forty beghas in extent. He had three sons and one daughter. The daughter was married to a respectable man named Raj Narayan Dutt, who lived in the bazaar of Rupgunje, at a distance of 4 kos. The three sons had all been educated at the college of Kishnanagar, and were men of capacity. But the youngest son was very desirous of gaining reputation and honour in the service of government. One day he said to his father in the presence of several of the villagers, "Father, I wish to go into a distant country and to acquire wealth. My friend, Joy Narayan Mittra, has obtained a situation at Agra. I will go to him. He will receive me at his house, and by the favour of the Hakim, I shall be appointed to some situation or other." The father was much grieved, and replied, "My son, abandon this idea. Your mother is now old and she will die of sorrow at your departure. There are, besides, many dangers in the way; and even if you arrive safe, you will not be able to understand the customs of the inhabitants. The climate of that region is very bad. It is right and proper that you should remain in your own village, or should proceed to Calcutta, at which place I have many friends. You will, with greater ease, be able to obtain employment in the office of some merchant, or you can become a clerk in the service of government." Having heard these words the young man, after much reflection, abandoned the notion of going away from home. In a few years, however, his father and his mother died, and he then set out for Agra, as he had intended.

FINAL EXAMINATION, CANDIDATES OF 1876.

HINDÎ. (1.)

FITZEDWARD HALL, Esq., D.C.L.

Monday, 17th June 1878. 10 A.M. to 1 P.M.

I.

a. When may the sign of the genitive case be omitted between substantives?

b. Exemplify compound substantives in which their elements are modified.

c. Give instances of substantives of agency terminating in -ए and -वा.

d. How is distributiveness expressed by numerals?

e. What is the Hindi for 26, 39, 48, 53, 64, 79?

f. What case governs दिखाई देना?

g. Mention some cases in which postpositions may be omitted.

h. Name the adverbs of place.

II.

For retranslation into Hindi:

a. It blew hard the whole night; and, when I got up the next morning, the ship was no longer to be seen. On observing this, at first I was in some distress of mind. However, as I had got everything from the ship that I wanted, I could have derived no further profit from it; and this reflection, on second thoughts, gave me comfort. I was also relieved from the longing to go and search it, to find whether I could not lay my hand on something else to bring away. So my feelings were at last expressed by exclaiming: "Alas! the ship has gone to the bottom."

b. Living objects are distinguished from lifeless by this, that, in some way or other, they can always move. Wherever stones fall, there they lie, until they are lifted up, or sunk down, or moved away; but animals crawl, run, fly, or swim about. Plants, too, move, but in quite a different way. They are fixed in the ground by their roots. Hence they are unable to go from place to place. They move only by swelling, and so becoming larger.

HINDÎ. (2.)

FITZEDWARD HALL, Esq., D.C.L.

Monday, 17th June 1878. 2 P.M. to 5 P.M.

I.

For translation into English:

a. जो बारूद मैं जहाज़ पर से ले आया था सो बड़े २ भारी पीपों में थी जिन को मैं उठाकर अपने डेरे तक नहीं ला सकता था। इस लिये उस की छोटी २ थैलियां बनाकर ले आया। इस भांति जब संपूर्ण वस्तु आ गई तब एक छोटा तंबू खड़ा करने के लिये एक खंभा बनाया और उस पर पाल तान दिया। संपूर्ण पदार्थ उस

के नीचे रख दिये जिस में धूप और वृष्टि से न बिगड़ जांय। फिर उस के चारों ओर पोपे और संदूक़ इस रीति से रख दिये कि कोई मनुष्य वा वन्य पशु मेरे पास न आ सके। तंबू के द्वार पर एक संदूक़ औंधा रख उस के सहारे से उस द्वार को तख़्ते तों से मूंद दिया। तब बीच में शयन निमित्त शय्या बिछा दो सिरहाने और एक बंदूक़ बग़ल में रखकर सोया। एक तो पहली रात का जागा हुआ दूसरे दिन भर का थका था। इस कारण मुझे अत्यन्त निद्रा आई।

b. थोड़ा थोड़ा करके ढेर होता है और बूंद बूंद करके रेला। जब बूंद में बूंद मिलती है तब नदी होती है और जब नदी से नदी संगम करती है तब समुद्र हो जाता है। थोड़ा थोड़ा मिलकर बहुत हो जाता है जैसे कणि कणि अन्न से ढेर हो जाता है।

पण्डित को चाहिये नहीं कि अपनी गम्भीरता से मूर्ख की नीचता को क्षमा करे क्योंकि इस में दोनों ओर हानि है। इस का मान घटेगा और उस का अज्ञान बढ़ेगा।

जो नीच से नम्रता और कृपा के साथ बोलेगा तो उस का घमंड और मगरापन बढ़ जाएगा।

c. दो॰ भाई। मुनि जी हम ये हैं।

कण्व। पुत्र सारंगरव अपनी बहन को गैल बताओ।

सारथी। आओ भगवती। इधर आओ। (सब चले)

कण्व। हे तपोवन के वृक्षो जिस शकुन्तला ने तुम्हारे बिना सींचे कभी जल भी कहीं पिया। और जिसे यद्यपि पुष्पपत्र के गहने बनाने का चाव था परंतु प्यार के मारे तुम्हारे फूल पत्ते कभी न तोड़े। और बड़ा आनन्द सदा तुम्हाने मौरने के समय माना। इस को तुम पति के घर जाने की आज्ञा दो। (कोयल बोली) यह देखो वनदेवियों ने आज्ञा दी।

(आकाशवाणी) शकुन्तला को यह थाथा, मङ्गल
। और उस के सुख के निमित्त मार्ग में पवन
पराग बरसावे। कमलसंयुक्त निर्मल जल के ताल
पर्यटन में सुख दें। और दुष्टों की सघन छाया सूर्य
तेज से रक्षा करे।

d. जो घाम वायु के बीच से जाता है उस से सब
वह वायु आप कुछ भी गरमी नहीं पाती। खिरकी
कड़ी धूप में हो और जिस में कांच की किवाड़ियां
ो हों तो काले कागद वा कपड़े का एक टूक जो
ष को भितरी अलंग थोड़ी इंच के अन्तर पर पकड़ा
श तो स्वच्छ पदार्थों के आर पार जाने और उन को
म न करने को घाम की शक्ति झट देख पड़ेगी। कागद
कपड़ा शीघ्र ही बहुत गरम हो जायगा परंतु जिस
ष में होकर घाम यह फल उत्पन्न करेगा सो बराबर
ठंढा ही बना रहेगा। जैसे घाम कांच की पटरी
आर पार जाता है और उसे तपाता नहीं तैसे ही
ठीक वह वायु के बीच से जाता है। इस निमित्त
मण्डल में ऊंचे पर जहां कोई गरम ठोस वस्तु निकट
रहती कि जिस की कुछ गरमी उस में आय तहां
ो धूप में भी वायु आप बहुत ठंढी रहती है यहां
कि जो भाफ उस के बीच उड़ा करती है सो सघनतुषार
अवस्था में रहती है।

II.

translation into Hindi :

here are two errors into which we easily slip, when thinking of past
s. One lies in forgetting, in the excellence of what remains, the
overbalance of worthlessness that has been swept away. The
nd is, that, in this comparison of ages, we divide time merely into
and present, and place these in the balance, to be weighed against
other; not considering that the present is, in our estimation, not

more than a period of thirty years, or half a century at most, and that the past is a mighty accumulation of many such periods, perhaps the whole of recorded time, or, at least, the whole of that portion of it in which our own country has been distinguished.

SANSKRIT. (1.)

Professor E. B. COWELL.

Thursday, 20th June 1878. 10 A.M. to 1 P.M.

1. Apply the rules of Sandhi to

अग्ने + एहि,

उत्पन्ना + इतौ,

ये + अमू (neuter),

स्युः + रक्षाः.

2. Give the nominative of वधू and पथिन् in the three numbers.
3. Give the accusative singular feminine and the accusative plural masculine of तिर्यच्.
4. Give the first person of the three numbers of the imperfect, Parasmaipada and 'Atmanepada, of क्री (क्रीणाति), and the third person of the same of लिह्.
5. Give the third person, singular and plural, of the reduplicated perfect Parasmaipada of जि, स्वप, हा, जन्, and 'Atmanepada of हु and क्षे. Give the second person plural of the last two.
6. Give the third person, singular and dual, of the aorist Parasmaipada of सृज् and मुच्, and of the causal of भू and नी.
7. Give the infinitive and indeclinable past participle of सृज्, स्वप्, यज्, लिह्, and ग्रह्.
8. Give the third person singular of the present of the intensive, with य, of हा and हु, and without य, of भ्रु.
9. *Translate into Sanskrit:*
   - *a.* Even a worm by association with a flower climbs to the head of the god; even a stone attains divinity, when properly consecrated by the great.
   - *b.* He who has wealth has friends, he who has wealth has kindred; he who has wealth is a man in the world, he who has wealth is wise.
   - *c.* Servants and ornaments are only proper in their place; a crest jewel is not proper on the foot nor an anklet on the head.
   - *d.* On the third day a violent wind blew; the ship was broken on the rocks, and the prince alone escaped. He wandered about on an uninhabited island, and he exclaimed, "Oh fate, shall I ever see my parents again?"

FINAL EXAMINATION. CANDIDATES OF 1876.

10. *Translate into English:*

The sage Gautama, being angry with his wife, bids h Chirakárika kill her.

इत्युक्ता स तदा विप्रो गौतमो जपतां वरः।
अविमृश्य महाभागो वनमेव जगाम सः॥
स तथेति चिरेणोक्ता स्वभावाच्चिरकारिकः।
विमृश्य चिरकारित्वाच्चिन्तयामास वै चिरम्॥
पितुराज्ञां कथं कुर्यां न हन्यां मातरं कथम्।
कथं धर्मच्छले नास्मिन् निमज्जेयमसाधुवत्॥
पितुराज्ञा परो धर्मः स्वधर्मो मातरक्षणम्।
अखतंत्रं च पुत्रत्वं किं नु मां मानुपीडयेत्॥
एवं विमृशतस्तस्य चिरकारितया बहु।
दीर्घैः कालो व्यतिक्रान्तस्ततोऽस्याभ्यागमत् पिता॥
विमृश्य तेन कालेन पत्न्याः संख्याव्यतिक्रमम्।
सोऽभवद्भृशसंतप्तः दुःखेनाभूणि वर्तयन्॥
दैवेन स्वयमाक्षिप्तो मग्नो दुस्तरसागरे।
हत्वा स्त्रीं च नारीं च को नु मां तारयिष्यति॥
यद्यद्य चिरकारी त्वं भद्रं ते चिरकारिक।
त्राहि मां मातरं चैव तपो यस्यार्जितं मया॥

Mahábhár

SANSKRIT. (2.)

Professor E. B. COWELL.

Thursday, 20th June 1878. 2 P.M. to 5 P.M.

Translate into English:

I.

तावेकवस्त्रसंवीतावटमानावितस्ततः।
क्षुत्पिपासापरिश्रान्तौ सभां काञ्चिदुपेयतुः॥
तां सभामुपसम्प्राप्य तदा स निषधाधिपः।
वैदर्भ्या सहितो राजा निषसाद महीतले॥
स वै विवस्त्रो विकटो मलिनः पांशुगुण्ठितः।
दमयन्त्या सह श्रान्तः सुष्वाप धरणीतले॥
दमयन्त्यपि कल्याणी निद्रयाऽपहृता ततः।
सहसा दुःखमाधाय सुकुमारी तपस्विनी॥

Nala.

Parse *samvítau.*

FINAL EXAMINATION. CANDIDATES OF 1876.

II.

काचः कांचनसंसर्गाद्धत्ते मारकतीं द्युतिं।
तथा सत्संनिधानेन मूर्खो याति प्रवीणताम्॥
हीयते हि मतिस्तात हीनैः सह समागमात्।
समैश्च समतामेति विशिष्टैश्च विशिष्टताम्॥

Hitopadesa.

III.

मनस्वी म्रियते कामं कार्पण्यं न तु गच्छति।
अपि निर्वाणमायाति नानलो याति शीतताम्॥
कुसुमस्तवकस्येव द्वे वृत्ती मनस्विनः।
सर्वेषां मूर्ध्नि वा तिष्ठेद्वीर्यते वथवा वने॥

Ibid.

IV.

यज्जीवति क्षणमपि प्रथितं मनुष्यैः
विज्ञानविक्रमयशोभिरभव्यमानम्।
तन्नाम जीवितमिह प्रवदन्ति तज्ज्ञाः
काकोऽपि जीवति चिराय बलिं च भुंक्ते॥

Ibid.

V.

अज्ञो भवति वै बालः पिता भवति मंचदः।
अज्ञं हि बालमित्याहुः पितेत्येव तु मंचदम्॥
न हायनैर्न पलितैर्न वित्तेन न बन्धुभिः।
ऋषयश्चक्रिरे धर्मं योऽनूचानः स नो महान्॥
विप्राणां ज्ञानतो ज्यैष्ठ्यं क्षत्रियाणां तु वीर्यतः।
वैश्यानां धान्यधनतः शूद्राणामेव जन्मतः॥
यथा काष्ठमयो हस्ती यथा चर्ममयो मृगः।
यश्च विप्रोऽनधीयानस्त्रयस्ते नाम बिभ्रति*॥

Manu.

---

* त्रय एते नाममात्रं दधति न तु हस्त्यादिकार्यं अनुबधादिकं च कुर्वन्ते।

Schol.

FINAL EXAMINATION CANDIDATES OF 1876.

VI.

दूरस्थो नार्चयेदेनं न क्रुद्धो नान्तिके स्थितः ।
यानासनस्थश्चैवैनमवरुह्याभिवादयेत् ॥
प्रतिवातेऽनुवाते च नासीत गुरुणा सह ।
असंश्रवे चैव गुरोर्न किंचिदपि कीर्तयेत् ॥

Schol.

VII.

नूनं मत्तः परं वंश्याः पिण्डविच्छेददर्शिनः ।
न प्रकामभुजः श्राद्धे स्वधासंग्रहतत्पराः ॥
मत्परं दुर्लभं मत्वा नूनमावर्जितं मया ।
पयः पूर्वैः स्वनिःश्वासकवोष्णमुपभुज्यते ॥
सोऽहमिक्ष्वाकुवृद्धानां प्रजालोपनिमीलितः ।
प्रकाशश्चाप्रकाशश्च लोकालोक इवाचलः ॥
लोकान्तरसुखं पुण्यं तपोदानसमुद्भवं ।
सन्ततिः शुद्धवंश्या हि परत्रेह च शर्मणे ॥

Raghuvamśa.

Explain the Scholiast's remark,

लोकालोकोऽयम्नः सूर्यसंपर्कात् वहिस्तमोव्याप्त्या च प्रकाशाप्रकाशश्चेति मन्तव्यम् ।

VIII.

स पाटलायां गवि तस्थिवांसं धनुर्धरः केसरिणं ददर्श ।
अधित्यकायामिव धातुमय्यां रोद्धुं सानुमतः प्रकुष्टं ॥
ततो मृगेन्द्रस्य मृगेन्द्रगामी वधाय वध्वस्य शरं शरण्यः ।
आताभिषङ्गो नृपतिर्निषङ्गादुद्धर्तुमैक्षप्रसभोद्धृतारिः ॥
वामेतरस्तस्य करः प्रहर्तुर्नखप्रभाभूषितकङ्कपत्रे ।
सक्ताङ्गुलिः सायकपुंख एव चिचार्पितारम्भ इवावतस्थे ॥
बाऊप्रतिष्टम्भविवृद्धमन्युरभ्यर्णमागस्कृतमस्यशङ्कः ।
राजा स्वतेजोभिरदह्यतान्तर्भोगीव मन्त्रौषधिरुद्धवीर्यः ॥

Ibid.

ARABIC. (1.)

Final Examination, Candidates of 1876.

Colonel J. W. J. Ouseley.

Friday, 21st June 1878. 2 P.M. to 5 P.M.

To be translated into Arabic:

So they journeyed on a little until they came near to the seat of government of Suleyman the son of Daood (on both of whom be peace!), when Suleyman ordered the troops of mankind and of the genii and all other creatures to range themselves in their ranks: and behold! the wild creatures of the sea, and the elephants and the lions, the leopards and the lynxes, ranged themselves accordingly in two ranks. The birds also spread their wings over the other creatures to shade them, warbling one to another with all tongues, and with all notes. But when the people of Egypt beheld them they were afraid, and unable to proceed; so the King said, Enter among them, and pass on, and fear not, for they are the subjects of Suleyman the son of Daood, and none of them will hurt you. Then Abdoollah entered among them, and the people followed him, but they were in fear. And they ceased not to proceed until they arrived at the city, where they were lodged in the mansion of entertainment, and treated with the utmost honour, and sumptuous banquets were brought to them during a period of three days. After this they appeared before Suleyman the Prophet of God (peace be on him!), and desired to kiss the ground before him; but he forbade them to do so, and said, It is not meet that a man prostrate himself upon the ground, save unto God (to whom be ascribed might and glory!), and whoever among you desireth to stand, let him stand; but none of you shall stand in attendance on me.

To interfere with the business and pursuits of other people is a sure way of getting into trouble.

His health has been injured by undertaking too much and giving up too much time to his studies.

I cannot avoid taking my share in the work that is going on, although it might be more wise to abstain from doing so.

However improbable a story may be, he believes whatever people tell him.

ARABIC. (2.)

Colonel J. W. J. Ouseley.

Saturday, 22nd June 1878. 10 A.M. to 1 P.M.

Translate into English:

قَدْ كُنْتُ أَرْجُو بِأَنَّ الشَّمْلَ يَجْتَمِعُ مَاكَانَ لِي فِي حَيْوَتِي بَعْدَكُمْ طَمَعُ

أَقْسَمْتُ مَافِي فُؤَادِي غَيْرَ حُبِّكُمْ وَ اللّٰهُ رَبِّي عَلَى الْأَسْرَارِ مُطَّلِعُ

ثم قالت لعجيب يا ولدي اين كنت قال في مدينه دمشق فعند ذلك قامت و قدمت له زبدية طعام حب رمان و كان قليل الحلاوة و قالت

للخادم اقعد مع سيدک فقال الخادم في نفسه و الله مالنا نفـ
و جلس الخادم و اما عجيب فلما جلس كانت بطنه ملآنة ،
و شرب فاخذ لقمة و غمسها في حب الرمان و اكل فوجده قليل
لانه كان شبعان فقال افوه ايش هذا الطعام الوحش فقالت جدته
تعيب علي طبيخي وانا طبخته ولا يحسن احد الطبخ مثلي
بدرالدين حسن فقالت عجيب و الله ياستي ان طبيخک هذا
نحن في هذه الساعة راينا في المدينة طباخا طبخ حب رمان
ينفتح لها القلب و اما طعامه فانه يشتهي ان يوكل و اما طعامک
فلا يساوي كثيرا ولا قليلا فلما سمعت جدته كلامه اغتاظت غيظ
و نظرت الي الخادم

قال المَلِكُ للحكيم و مِن اَينَ للملائكةِ هٰذه الرحمةُ والرأفةُ
و التحنُّنُ الذي ذكرتَ قال مِن رحمةِ اللّهِ ورأفتِه للخلق و شفقتِه
و كلُّ رافةٍ ورحمةٍ من الوِلدانِ و الآباء و الأُمّهاتِ والملائكةِ و رحمة
كُلِّهم بعضِهم لبعضٍ فهي جزءٌ من الف الف جزءٍ من رحمة اللّ
لخلقهِ و تحنُّنِه و شفقتِه علي عِبادِه و من الدليل علي صحّةِ ماذ
حَقِّيَّةِ ماوَصَفتُ اَنّ ربَّهم لَمّا اَبدأَهم وَاَبدَعَهم وحَلَقَهم وسَوّاهُم و
رَبّاهُم وكّل بحِفظِهم الملائكَة الذين هُم صَفوَتُه من خَلقِه وجَعَلَ
كرامًابَرَرَةً وخَلَقَ لها المنافِعَ والمرافق من طُرق الهَياكِلِ العجيبةِ والصُّو
الظريفة والحواسِّ الدَرّاكةِ اللّطيفةِ وَاَلهَمَهُم جَرَّالمنافع و دَفَعَ المضا
الخيلَ و النهارَو الشمسَ و القمرو النجوم

FINAL EXAMINATION. CANDIDATES OF 1876.

مرجان قال ارسطو هو حجر ينبت في البحر احمر اللون اذا ادخل في الزبل والعفونة يدخل في كثير من الصنعة وافضل شيء منه رماده وهو اذا كلس عقد الزيبق وصبغه بلون الذهب وهو يدخل في علاج العين وتصليب الحدقة * وقال غيره انه يستخرج من موضع يسمّي مرسي الخرز وهو بقرب ساحل افريقية يجتمع التجار بها ويستاجرون اهل تلك النواحى لاستخراج المرجان من قعر البحر وليس في ذلك الموضع علي مستخرجه ضريبه ولا للسلطان فيه حصّة فمن اراد ذلك يتّخذ صليباً من خشب طوله قدر ذراع ويشدّ فيه حجراً ويركب ركوة يبعد عن الساحل نصف فرسخ فعند ذلك منبت المرجان فيرسل الصليب الي ان ينتهي الي القعر ثم يمرّ بالركوة يميناً وشمالاً ليعلق المرجان بذوايب الصليب ثم يقتلعه بقوّة ويرقيه اليه وقد علق بالصليب جسم مشجر اغبر القشرة واذا حكّ خرج احمر اللون وزعم بعض الناس انه يوجد ايضاً في قعر بحر الاندلس والغوّاصون ينزلون اليه ويقطعونه ويشدّونه في الحبل ويخرجونه * امّا خواصّه ومنافعه فقد ذكر في البسد وهو اصله فلا نعيدها *

PERSIAN. (1.)

Colonel J. W. J. OUSELEY.

Monday, 24th June 1878. 10 A.M. to 1 P.M.

To be translated into Persian:

The bulk of the Persian people may be divided into four distinct classes; 1st, those who are attached to the various courts, and live in service with great men, including the military and various functionaries; 2nd, those who live in towns, comprehending merchants, shopkeepers, mechanics, &c.; 3rd, those engaged in agriculture; and 4th, the wandering tribes, or eels. That the first-mentioned class should be void of virtue or principle is by no means to be wondered at. The character of the Government to which they are attached,—despotic, insolent, and treacherous,—naturally forms that of its servants. The nobles and superior officers of court, subjected to the caprice of a tyrant who can neither endure opposition nor disappointment, become in their turn cruel, haughty, and imperious to their inferiors. The greatest noble in Persia is never for a moment secure either in his person or property;

f rage, jealousy, or avarice of which he is the object happens to sovereign, a word, a look, from the despot, subjects him to the insults; he may be beaten, maimed, disgraced like the lowest s person treated in a way degrading to humanity, his wives ghters insulted, and the little family honour a Persian can ay be scattered to the winds, while the unhappy sufferer has f remedy.

eld a private conference and long conversation on the subject, eferring in any way to the principal agent in that business.

ou propose is not practicable, for such habits are prejudicial to

t consider the conduct imputed to him to be proper or im- d if wrong, on whom should the blame rest?

ears to have read much, and to be well versed in oriental d literature.

PERSIAN. (2.)

Colonel J. W. J. OUSELEY.

Monday, 24th June 1878. 2 P.M. to 5 P.M.

into English:

بدانکه نزد خردمندان کامل الذات و هنر وران ستوده صفات
گرانمایه‌تر از وجود دوستان مخلص و هیچ درجهٔ بلند پایه‌تر از
خالص نیست

بیت

ز آنکه در آفاق زبرنا و پیر هیچکس از یار ندارد گ

و هرآئینه جمعیکه سکه محبت ایشان در دار الضرب اخلاص ب
آرایش یافته و نهال مودت شان در روضهٔ اختصاص برشحهٔ یکجهتي
پرورش پذیرفته راحت روح و مدد فیض و فتوح‌اند و فایدهٔ دو
منفعت ایشان بیشمار است از جملهٔ آنکه در ایام دولت مدد
و معاشرت باشند و در زمان نکبت طریقهٔ معاونت و وظیفهٔ همراه
مسلوك دارند

قطعه

یار بدست آر که بس بیکس است هرکه مرا ورا بجهان
زینهمه نعمت که درین عالم است هیچ به از یار وف

FINAL EXAMINATION. CANDIDATES OF 1876.

یکي خوب خُلق و خلَق پوش بود — که در مِصر یکچند خاموش بود
خِردمند مردم زنزدیک ودور — بِگِردش چو پروانه جویان نور
تفکّر شبي با دلِ خویش کرد — که پوشیده زیر زبان است مرد
اگر همچنین سر بخود در برم — چه دانند مردم کهِ دانِشوَرم
سخن گُفت و دشمن بدانست و دوست — که در مضر نادان تر ازوي هم اوست
حُضورش پریشان شد وکار زِشت — سفر کرد وبر طاقِ مسجد نبشت
در آئینه گر خویشتن دیدمي — ببیدِانشي پرده نَدریدمي
چنین زِشت از آن پرده بر داشتم — که خودرا نِکو روي پنداشتم
کم آوازرا باشد آوازه تیز — چو گُفتي و رَونَق نماندت گریز
ترا خامُشي اي خداوند هوش — وقَار است ونا اهلرا پرده پوش
اگر عالمي هَیبتِ خود مبر — وگر جاهلی پردهء خود مدر
ضمیر دلِ خویش منمّای زود — که هرگه که خواهی توانی نمود
ولیکن چو پیدا شود راز مرد — بکوشش نشاید نهان باز کرد

قضارا در ان شب آن دیولعین که استاد این ملعون بود بدین شگاف نیامد چون نیمي از شب سپري گشت ببالین شاگرد او فرارفتم و لختي پژوهش حالش نمودم دیدم برادر مرگ تتق غفلت برچشم جهان بینش بسته و ساقي خواب شراب بیهوشي بساغردماغش ریخته فرصت وقت از جملهٔ مغتنمات انکاشته دست بحبل المتین توکل که بهین استظهار آوارگان وادي افتقاراست زدم و آستینرا بر دوساعد نوردیده سیخهائی که دیو بدان کباب راست می کردبدان گونه در آتش بتاب آوردم که رنگ شبگرف یافت پس نرم نرم ببالینش فرارفتم و سرهردو سیخ آتش گون که پنداشتی شعلهء آذر ست بر هر دو چشم عفریت نهاده سخت زوري زدم تا آنکه از کاسهٔ حدقه اش بادهٔ بصیرت بریخت از انجا به چستي برق جسته به کنجي متواری گشتم بانگی عجب که از صدمتش جگر کوه آب مي شد و چراغ هوش در شبستان دماغ انسانی خاموش مي گشت از نهاد عفریت بدنهاد بر آمد

بنی آدم اعضاے یکدیگرند که در آفرینش زیك جو
چوعُضوي بدرد آور دروزگار دگرعضوهارا نمانـد ق
تو کزمحنت دیگران بیغمي نشاید که نامت نهند آد

و آین مقامرا مراتب مختلفد و مدارج متفا و ته هست و از ش
قُدِّسَ سِرُّهٗ منقولست که از چوبي که بر بَهیمه زدندانر ضرب ب
ظاهر شد و سِرِّ این معني اگرچه بر محبوسان مضیق مضایقات
نظر ایشان بکُنه اشیا نرسیده وجمال حقیقت حال ندیده حقایقرا
حروف اساطیر مسطورهٔ کتب متداوله فراگیرند

[*Papers were also set in Marathi and Tamil.*]

FINAL EXAMINATION OF THE CANDIDATES SELECTED IN 1876.—TABLE OF MARKS.

Order of Merit.		Name.	Presidency, &c.	MARKS OBTAINED IN												Total.
In the Open Competition.	In this Examination.			Total Law.	History and Geography of India.	Political Economy.	Hindustani.	Telugu.	Hindi.	Bengali.	Marathi.	Tamil.	Sanskrit.	Arabic.	Persian.	
				Maxima.												
				1,250	350	350	400	400	400	400	400	400	500	400	400	—
1	1	Lawrence; Edward	Bombay	1,091	238	305	333	—	—	—	325	—	306	352	349	3,299
19	2	Casperss; Charles Peter	Bengal (Lower Provinces).	977	248	262	304	—	—	309	—	—	374	—	310	2,784
5	3	Macpherson; Duncan James.	Do.	992	260	254	326	—	—	250	—	—	331	—	277	2,690
2	4	Baker; Edward Norman	Do.	925	264	270	306	—	—	327	—	—	335	—	211	2,628
29	5	Maguire; Hugh Fitzjohn Tyrrel.	Do.	898	150	264	325	—	--	209	—	—	283	216	252	2,587
17	6	Impey; William Henry Lockington.	North-West Provinces, Punjaub, and Oude.	868	212	242	338	—	342	—	—	—	317	—	245	2,564
6	7	Collins; Arthur Herbert	Bengal (Lower Provinces).	844	264	248	295	—	—	348	—	—	437	—	—	2,436
13	8	King; Lucas White	North-West Provinces, Punjaub, and Oude.	738	226	221	296	—	273	—	—	—	—	311	316	2,381
26	9	Meredith; Arthur	Do.	876	215	242	310	—	287	—	—	—	127	—	320	2,377
30	10	Seaton; James Clark	Madras	884	218	342	—	376	—	—	—	364	—	—	—	2,184

FINAL EXAMINATION, (CANDIDATES OF 1876.

Final Examination of the Candidates selected in 1876.—Table of Marks—*continued*.

Order of Merit.		Name.	Presidency, &c.	MARKS OBTAINED IN												Total.
In the Open Competition.	In this Examination.			Total Law.	History and Geography of India.	Political Economy.	Hindustani.	Telugu.	Hindi.	Bengali.	Marathi.	Tamil.	Sanskrit.	Arabic.	Persian.	
				Maxima.												
				1,250	350	350	400	400	400	400	400	400	500	400	400	—
3	11	Collin; Edward Woodfield	Bengal (Lower Provinces).	850	258	264	267	—	—	196	—	—	—	—	223	2,059
4	12	Shakespear; Alexander Murison Wake.	North-West Provinces, Punjaub, and Oude.	831	246	260	343	—	—	—	—	—	—	—	340	2,020
15	13	Irwin; George Robert -	Do. - - -	907	330	233	293	—	250	—	—	—	—	—	—	2,013
22	14	Drew; William Wilson -	Do. - - -	774	165	221	262	—	—	—	—	—	363	—	214	1,998
8	15	Crawford; James Adair -	Bombay - - -	816	194	223	296	—	—	—	373	—	—	—	—	1,902
16	16	Williams; George Mawdsley.	Madras - - -	784	302	228	—	326	—	—	—	243	—	—	—	1,883
9	17	Bradley; Herbert - -	Do. - - -	848	216	256	—	325	—	—	—	216	—	—	—	1,861
14	18	Gray; Percy - -	North-West Provinces, Punjaub, and Oude.	676	244	160	230	—	—	—	—	—	486	—	—	1,846
20	19	Eales; Charles Lindsledt Modellier.	Do. - - -	775	196	261	279	—	—	—	—	—	52	—	209	1,772
21	20	Nethersole; William -	Do.	713	192	268	233	—	—	—	—	—	—	—	262	1,718

Final Examination of the Candidates selected in 1876.—Table of Marks—*continued.*

Order of Merit. In the Open Competition.	Order of Merit. In this Examination.	Name.	Presidency, &c.	Marks obtained in: Total Law.	History and Geography of India.	Political Economy.	Hindustani.	Telugu.	Hindi.	Bengali.	Marathi.	Tamil.	Sanskrit.	Arabic.	Persian.	Total.
				Maxima.												
				1,250	350	350	400	400	400	400	400	400	500	400	400	—
10	21	Cappel; Edward Louis -	North-West Provinces, Punjaub, and Oude.	762	138	216	310	—	—	—	—	—	—	—	267	1,693
23	21	Hall; William Thomas -	Bengal (Lower Provinces).	731	206	260	249	—	—	247	—	—	—	—	—	1,693
18	23	Sankey; Henry - -	Do. - - -	749	158	231	294	—	—	239	—	—	—	—	—	1,671
24	24	Sim; Henry Alexander -	Madras - - -	928	240	193	—	308	—	—	—	—	—	—	—	1,669
7	25	Mounsey; Charles Herbert	Do. - - -	889	204	267	—	289	—	—	—	—	—	—	—	1,649
24	26	Gray; Evelyn - -	Bombay - - -	665	244	197	277	—	—	—	—	—	—	—	226	1,609
31	27	Otter; Henry Shirecliffe -	Madras - - -	824	212	226	—	342	—	—	—	—	—	—	—	1,604
13	28	Atkinson; John Nathaniel	Do. - - -	835	196	198	—	326	—	—	—	—	—	—	—	1,555
27	29	Porteous; Alexander -	Bengal (Lower Provinces).	703	224	230	273	—	—	—	—	—	123	—	—	1,553
28	30	Dingwall; Arthur - -	Do. - - -	630	155	206	208	—	—	—	—	—	—	—	229	1,509

FINAL EXAMINATION. CANDIDATES OF 1876.

PRIZES AWARDED.

After a Special Examination held for the purpose.

Law - - - -	£100.	Mr. Lawrence.
History and Geography of India -	£50.	Mr. Irwin.
Political Economy - -	£50.	Mr. Seaton.
Hindustani - - -	£50.	Mr. Shakespear.
Telugu - - - -	£50.	Mr. Seaton.
Hindi - - - -	£50.	Mr. Impey.
Bengali - - - -	£50.	Mr. Baker.
Marathi - - - -	£50.	Mr. Crawford.
Tamil - - - -	£50.	Mr. Seaton.
Sanskrit - - - -	£75.	Mr. P. Gray.
Arabic - - - -	£50.	Mr. Lawrence.
Persian - - - -	£50.	

At the previous PERIODICAL EXAMINATIONS, Prizes of £10 each were awarded to the following CANDIDATES:—

Jurisprudence - -	Mr. Lawrence, Mr. Collins.
Notes of Cases, &c. -	Mr. Baker, Mr. Macpherson, Mr. Lawrence.
Indian Law - -	Mr. Caspersz, Mr. Lawrence, Mr. Irwin.
History and Geography of India - -	Mr. Caspersz, Mr. Collins, Mr. Irwin.
Political Economy -	Mr. King, Mr. Caspersz, Mr. Lawrence.
Hindustani - -	Mr. Shakespear, Mr. Maguire, Mr. Lawrence.
Telugu - - -	Mr. Seaton, Mr. Bradley.
Hindi - - -	Mr. P. Gray, Mr. Impey.
Bengali - - -	*No Prize awarded.*
Marathi - -	Mr. Crawford, Mr. Lawrence.
Tamil - - -	Mr. Williams, Mr. Seaton.
Sanskrit - -	Mr. P. Gray, Mr. Collins.
Arabic - - -	Mr. Lawrence, Mr. King.
Persian - - -	Mr. Lawrence, Mr. Shakespear.

EXAMINERS.

Jurisprudence - - -	T. C. Sandars, Esq.
Law of India, &c. - - -	Sir H. S. Maine, K.C.S.I.
Notes of Cases and Law of Evidence -	Kenelm E. Digby, Esq.
History and Geography of India -	Claude Erskine, Esq.
Political Economy - - -	Professor J. E. T. Rogers.
Hindustani - - - -	Fitzedward Hall, Esq., D.C.L.
Telugu - - - -	J. Goldingham, Esq.
Hindi - - - -	Fitzedward Hall, Esq., D.C.L.
Bengali - - - -	W. S. Seton-Karr, Esq.
Marathi - - - -	Rev. A. H. Frost.
Tamil - - - -	Rev. S. Hobbs.
Sanskrit - - - -	Professor E. B. Cowell.
Arabic - - - -	Colonel J. W. J. Ouseley.
Persian - - - -	

PRIZE EXAMINATION. CANDIDATES OF 1876.

5.—PAPERS SET AT THE PRIZE EXAMINATION OF CANDIDATES SELECTED IN 1876.

LAW (PRIZE EXAMINATION).

Sir HENRY MAINE, K.C.S.I.; T. C. SANDARS, Esq.;

KENELM E. DIGBY, Esq.

Saturday, 8th June 1878. 10 A.M. to 1 P.M.

1. In what particulars do you consider that the Hindu Law of intestate succession under the Mitakshara has been derived from the law of partition of joint-estates?
2. Give a brief account of the rights and liabilities of Partners under the Indian Contract Act.
3. Define Abetment, and contrast the Indian with the English law on the same subject.
4. Compare the influence and method of Bentham as a legal reformer with the influence and method of the Roman jurists who introduced the law of nature into the Roman system.
5. To what extent is international law based on Roman law?
6. "So long as ethical science had to do with the practical regimen "of conduct, it was more or less saturated with Roman law." Illustrate this statement by examples.
7. Trace the historical connexion between the growth of the Law of Evidence, and the development of the procedure and machinery of the English Courts.
8. How far should the doctrines as to *presumptions* be embodied in the Law of Evidence? Give instances.
9. Examine the grounds for adopting the "Theory of Relevancy" as the basis of the Law of Evidence.

HISTORY AND GEOGRAPHY OF INDIA (PRIZE EXAMINATION).

CLAUDE ERSKINE, Esq.

Tuesday, 11th June 1878. 10 A.M. to 1 P.M.

1. Describe the characters and careers of any three European military adventurers who rose to distinction in the service of Native Princes in India during the last quarter of the 18th or the first quarter of the 19th century.
2. Describe and contrast the dangers by which the British Government in India was threatened at the following periods: 1778–83; 1798–1804; and 1815–18.

PRIZE EXAMINATION. CANDIDATES OF 1876.

3. Compare generally the systems of village communities and the Land Revenue arrangements in Bengal, Madras, the North Western Provinces, and Bombay respectively, referring briefly to some of the views (on those subjects) of Lord Cornwallis, Sir T. Munro, Mr. Elphinstone, and Sir H. Maine.

4. Describe the chief events in the history of the Punjab during the five years preceding, and the five years following, the death of Runjeet Sing.

5. Describe, as fully as you can, the gradual acquisition by the British Government of the territories forming the Presidency of Bombay, noting, as you proceed, the geographical position and features of the Provinces so acquired.

6. Give a geographical description of the countries traversed by British troops during the Nepalese War and the First Burmese War.

7. Describe the courses of the Tumbadra, Bheema, Wurda, and Gunduk. Are any of those rivers noticed in connexion with any facts or events of historical interest?

POLITICAL ECONOMY (PRIZE EXAMINATION).

Professor J. E. THOROLD ROGERS.

Wednesday, 12th June 1878. 2 P.M. to 5 P.M.

1. In what particulars does Ricardo criticise Adam Smith's theory as to the effect of bounties on the exportation of corn?

2. "The commencement of war after a long peace, or of peace after a "long war, generally produces considerable distress in trade." How does Ricardo explain this phenomenon?

3. "A tax on rent, as rent is constituted, would discourage cultivation, "because it would be a tax on the profits of the landlord." Criticise this statement (1) from the definition which you give of rent, (2) from that of profits.

4. What is the precise addition which Mr. Ricardo has made to the theory of value, and what is the importance of his contribution to the theory?

5. Which of the following contingencies would tend most to develop the increased area of arable land: (1) the deterioration of the labourers condition, (2) the growth of agricultural skill? Trace the relative effect of these phenomena in the theory of rent.

6. What are the difficulties attending the transmission of balances from one country to another when the legal currency in the two countries is fundamentally different?

7. Show the importance of public debts in the liquidation of foreign exchanges.

8. To what extent does an adverse state of the foreign exchanges affect the rate at which bills are discounted?

9. What has been the general character of British finance since the first imposition of Sir Robert Peel's Income Tax?

10. What financial expedients were adopted by the Government during the Crimean War? On what grounds are they to be justified or condemned?

11. Examine Sir Stafford Northcote's criticism of Mr. Hume's motion for a Committee on the Income Tax in 1851.

PRIZE EXAMINATION. CANDIDATES OF 1876.

HINDÛSTÂNÎ (PRIZE EXAMINATION).

FITZEDWARD HALL, Esq., D.C.L.

Friday, 14th June 1878. 2 P.M. to 5 P.M.

I.

For translation into English:

a تب اُنّهون ني خطّ جلْدي سي پڑّهكر كها اگرچة يهه عُذْر بج
نهين مگر باعِث اِس كي تقْصير كي تخْفِيف كا هَي اَور يهه ميري
واسْطي ايك سبب هَي كِه اب مَين اِس كي تقْصير كو مُعاف كرُون *
اَور بعْد اِس كي مِهرْباني سي ميري بيڻي كا اُنْهون ني هاتْهه پكڑ ليا اَور
كها اگرْچه تُم مُجْهه كو يهان ديكهْني سي بهُت حَيران هُوي مگر مَين
اكْثر اِسّي ادْنا مُقدّمون كي واسْطي قَيدِيون كي مُلاقات كو گيا هُون *
اَور اب يهان آيا هُون تاكِه اِس مرْدِ بزُرگ كي حقّ مين اِنْصاف
ديكهُون * مَين تيري باپ كي خُوبِيان اُس بهيس مين ديكهْتا تها كِه
كيا كيا ميرِي خاطِرين اپْني غرِيباني گهر مين اُنْهون ني كي هَين اَور
كِس كِس طرح ميرِي خُوشْآمد اَور پيش‌آمد كرْتي تهي اَور اِن كي
خُوبِيون سي مَين اَيسا محْظُوظ هُوا هُون كِه كِسي مجْلِس پادْشاهي مين
بهي مَين ني يِهه لذّت كبْهي نه پاءي تهي * واه واه كيا بي ساخْتگِيان
اَپس مين كرْتي تهي جب كِه آگ تاپْني كو باهم هوكر هم سب

PRIZE EXAMINATION. CANDIDATES OF 1876.

* میري بهتیجي کو دریافت هُوا کِه میرا یهان آني کا قصد
وهُ یهان آیا هَي * اَور یِهه بَهُت بي جا هَي کِه تُم کو یا
ه مُقابلي کي تقصیر وار ٹهہراویي اَور اِس کا کُچهه مُضایقه
درد کِي ایک عِلاج بِهي هَي اَور مَین بِدُون خُودستاهي کي
تا هُون کِه آج تک کِسي ني میرا نام نهین سُنا هَي کِه
ني کبهي بي اِنصافي کِي هو *

پرورَ سلامت * آپ کا عِنایَت‌نامه مصحُوب محمّد خان کي
کُچهه خانِ مذکورُ کِي سِپارِش مین اِرقام هُوا هَي سو مُفصّل
کو معلُوم هُوا * قِي‌الواقِع خانصاحِبِ موصُوف نهایَت مرِد
حِبِ کمال هَین * فِدوِي اِن کي مُلاقات سي کمال محظُوظ
شهر مین کِسي شخص سي فِدوِي کو اِپني اُنس و مُحبّت
جِتني اِن دو تین هفتي کي عرصي مین اِن سي هُوءي هَي *
اِن کي چرچا عِلي رِیاضي کا رَهتا هَي * اَور هر روز باهم
ي مشق کِیا کرتي هَین * اِنشاءالله تعالي یِهه خاکسار اپني
ن کي مُقدّمي مین قُصُور نهین کرني کا جان و دِل سي اِن
ب کریگا *

هوگلي اور شاتگام آدهه کوس کا باهم فاصِله رکهتي هین *
شهریت اور آبادي بهت بڑي اور پُرعمارت تهن * حاکِم
تها * جب یِهه مقام دریاؤن کي طُغیاني سي اُجڑا هوگلي
ني کمال رونق پکڑي * فَوجدار یهان کا علاقه حُضورِ اعلي
ها * بنگالي کي ناظِمون کا چندان مُحتاج نه تها * جعفر خان
ي بندرِ مذکور کي بادشاه سي درخواست کرکي نظامت

PRIZE EXAMINATION. CANDIDATES OF 1876.

مين لگا لي * اور هر ملک کي سَوداگرون تاجرون سي مُراعات شروع کي * محصول واجبي سي ايک دام زيادہ نہ ليتا بلکہ کُچھہ اُس مين سي بهي چهوڑ ديتا * پهر تو فرنگ و چين و ايران و توران و عرب و عجم سي اکثرِ تجارت پيشون کي آمد و شُد هوني لگي * بلکہ بُهتيري مالکِ جهاز ني بود و باش بهي اپني يهين ٹهہرائي * لهذا شهرِ مذکور کي آبادي نهايت بڑهہ گئي * اگرچہ اکثر اقوام کي تاجر يهان تهي ليکن مغلون کا اِعتبار بيشتر تها * اور اهِل فرنگ کو قلعي اور برج کي بنياد ڈالني نہ ديتي مگر کوٹهيون کي تعمير کا حُکم تها * جب فَوجدارون ني سخت‌گيري اور زيادہ طلبي شروع کي شهرِ مذکور ويران هو گيا اور صاحِبانِ عاليشان کي رِعايت و حِمايت و آسانِي محصول سي کلکتہ زيادہ‌تر آباد کہ بالفعل دارُالحُکومت هي *

II.

For translation into Urdû :

There may be a question whether we have a right to call ours an enlightened age, as if claiming superiority over those which have gone by. But it can hardly be denied that it is a light-loving and a light-seeking age; one in which there is a general disposition to spread light everywhere, and to bring all things to the light, that they may be seen as they are. It is an age of restless curiosity and searching inquiry. If we fail to come at the truth, it is not because we ever shrink from approaching it, not because we let ourselves be stopped by any conventional barriers of usage or authority. We admit no right, in anyone, to judge for us on subjects of which we are able to judge for ourselves. We take no opinion upon trust, because it has come down to us with the stamp of an honoured name. We adopt it only after we have made it our own by a rigid scrutiny of its intrinsic claims to our assent.

PRIZE EXAMINATION. CANDIDATES OF 1876.

TELUGU (PRIZE EXAMINATION).

J. GOLDINGHAM, Esq.

Friday, 14th June 1878. 2 P.M. to 5 P.M.

Translate into English:

[మహా రాజ శ్రీ శేలంజిల్లా మేజస్త్రేటు యిలాకా చం
ద్రగిరి హేడ్డాఫ్ పోలయిసువారి సముఖానకు,

ఫిర్యాది రాజగోపాలు నాయడు సా|| చంద్రగిరి; ముద్దాయీ-
లైన శ్రీనివాసరావు, చెంగలరావు సా|| చంద్రగిరిమీద వ్రాయించి
దాఖలు చే సుకొన్న చార్జి యేమంటే;] మాఆవరణానకు చుట్టూ
వుండేగోడవర్షాలచేత పడిపోయినందున, కూలివాండ్లచేత ఆగోడ
పెట్టిస్తూ వుండగా, మా యింటికి వెనకతట్టు వుండే కొంత నేలకు
న్వంతదారుడైన ౧టో ముద్దాయి, తన నేలలో నేను గోడపెట్టి-
స్తూన్నానని, ఆ కూలివాండ్లతో మీరు గోడపెట్టలే, మీకు
సర్కారు దురాయి వున్న దని, చెప్పి, అటకా యిస్తూ వుండెను
అవ్వుడు, నేను మా యిండ్లటో వుండి విని, బైటికివచ్చి, ౧టో ముద్దా-
యితో నీవు యెందుకు యీలాగు గోడపెట్టనీయకుండా అట కాయి-
స్తున్నావు? నీస్థ ళంలో మేము గోడపెట్టస్తున్నా మని చెప్పు-
తున్నా వుగదా? నీజాగా పత్రము తీసుకవచ్చి చూచి, నీ హద్దు-
లలో నేను గోడపె ట్టంచే మాటే వాస్తవమైన వక్షమునందు,
నీవు యేమి నష్టము అడిగినా యిస్తాను, లేక మా యింటిపత్రం
తెమ్మంటే, తెస్తాను. చూచుకొమ్మని, యెంతచెప్పినా వినక, ౧టో
ముద్దాయిన్ని, అతనికి కుమ్మకుగా వచ్చిన రెండోముద్దాయిన్ని, గోడ-
పెట్టుతూ వున్నవాండ్ల వద్దికి పోయి, వాండ్లడు పనిచేస్తూవున్న
పారలు, గడ్డపారలు మొదలయినవాటిని పూడదీసుకొని, వాండ్లను
వెళ్లగొట్టనారు. అందుకు నేను ౧-౨ముద్ధాయీలను చూచి,
మిరు యిట్లా దౌర్జన్యము చేయవచ్చునా అని అడిగినందుకు, నీవు
యేమైనా మాట్లాడితే నీవండ్లడు రాలగొట్టుతామని, నోటికి రాని
దుర్భాషలు ఆడినారు. గనక, సకల ధర్మ స్వరూపులున్ను న్యాయక
ర్తలున్నయిన తమరు, ముద్దాయీలను తమ సముఖములోకి రప్పి-

PRIZE EXAMINATION. CANDIDATES OF 1876.

ంచి, నాకు వుండే నాఝులను ఏమర్కించి, చట్టప్రకారం వాండ్లకు తగిన దండన విధించడమే గాకుండా, నేను గోడపెట్టించుకొన్నే లాసున హుకుం దయచేయించవలెనని తమ ఘనాన్ని మిక్కిలి ప్రార్థిస్తున్నాను. దివ్య చిత్తానకు తేవలెను.

రుధిరోద్గారి సంవత్సర జ్యేష్ఠ బఒలు ఆదివారం.

Translate into Telugu:

a. A man living in the said village, without the permission of the (Sirkār) authorities, cut down 400 palm leaves in the garden belonging to the Annam family: out of these he gave 150 to Virāia; this matter came to my knowledge: on questioning them, it appears that the man confesses having cut the leaves without the permission of the authorities. I enclose his statement, and that of Virāia. You formerly fined a man for cutting leaves in this way. I therefore pray you will give me orders how I am to act on this occasion.

b. On the 10th of this month I wrote a letter to your honour, in which I stated that two oxen had been lodged with me, having stray'd from another village. One Hoosen Beg, inhabitant of Nagarem, presented himself here, recognised the two oxen as his own, and made a statement to that effect. As he has proved his statement by two witnesses, I request your permission to deliver the said oxen to Hoosen Beg.

BENGALI (PRIZE EXAMINATION).

W. S. SETON-KARR, Esq.

Tuesday, 18th June 1878. 10 A.M. to 1 P.M.

Translate into English:

অনেক দিবসাবধি আশীর্ব্বাদী কোন পত্র না পাওয়াতে অত্যন্ত উদ্বিগ্নচিত্ত আছি, অতএব প্রার্থনা যে করুণাবিতরণপূর্ব্বক বাটীর মঙ্গল সমাচার লিখিতে আজ্ঞা হইবেক।

শ্রীমান্ কনিষ্ঠ ভাইজীউকে বর্ত্তমান মাসের প্রথমদিবসাবধি পাঠার্থে হিন্দুস্কুল নামক বিদ্যালয়ে প্রেরণ করিয়াছি; তথায় তাহার বিদ্যাভ্যাস যথানিয়মে হইতেছে। ঈশ্বরেচ্ছায় তাহার যাহাতে সমুচিত জ্ঞানোপার্জ্জন হয়, ইহা সর্ব্বদা বাঞ্ছনীয়, এবং তাহাতে কোন ত্রুটি করা হইতেছে না। অপর প্রজাদিগের শৈথিল্যপ্রযুক্ত রাজপুর গ্রামের খাজানা আদায়ের ব্যঘাত হইয়াছে; বোধ হয় নালিস না করিলে বিহিত হইবে না। উকিলদিগের সহিত পরামর্শ করিয়া যাহা কর্ত্তব্য হয়, পরে শ্রীচরণে নিবেদন করিব ইতি।

PRIZE EXAMINATION. CANDIDATES OF 1876.

মহাশয়ের পত্র পাইয়া সমুদয় সমাচার অবগত হইলাম। শ্রীযুত মধ্যম বাবুজীর পীড়ার কথা শুনিয়া দুঃখিত হইয়াছি। কিন্তু মহাশয় উৎকণ্ঠিত হইবেন না। আমার নিকটে রোগের অতি উত্তম ঔষধ আছে। সেই ঔষধদ্বারা অনেক লোকের প্রতীকার হইয়াছে। আমি সেই ঔষধ প্রস্তুত করিয়া অতি শীঘ্র আপনকার নিকটে উপস্থিত হইব। আমি স্বয়ং যাইতে একান্ত না পারি, ঔষধ পাঠাইয়া দিব। পীড়ার অবস্থা কিরূপ পরিবর্ত্ত হইতেছে, অনুগ্রহ পূর্ব্বক সর্ব্বদা লিখিয়া তৃপ্ত রাখিবেন।

Translate into Bengali:

This Pundit related to me the story of two brothers whose lot in life was very unequal. The eldest brother, whose name was Tularam Rai, was very unfortunate. From his birth to his death he met with nothing but misfortune. At school he was always unlucky; when he was twenty years of age, his father's house was burnt, and with some difficulty he saved his own life. After his marriage his wife became sick and could not attend to the business of the house. One of his children in the rainy season fell into a tank and lost his life. The servants of the Zemindar practised all kinds of oppression on him. They came to his house in the night, used bad language, and having tied his hands took him by force to the Kutcherry in the village. When he was released, after three days, he was fined ten rupees. His daughter was married to a man who used to beat her. Once he was accused unjustly of being concerned in a Dacoity. In short there was no end to his troubles. The other brother attained to great prosperity and enjoyed much happiness. Two of his sons went to Calcutta and were employed by a rich merchant. A third studied medicine and became renowned as a physician. The Maharaja generously gave him a piece of Debullur land. In it there was a deep tank, a garden, and some mango trees. The Hakim of the district used to ask him for information about the affairs of the people, and showed him much honour. The Pundit was unable fully to explain these things. It was his opinion, however, that in a former birth the eldest brother had committed some grievous sin. On this account the gods were angry and punished him.

In this country many handicraftsmen dwelt. On the rivers many boats were coming and going. In the bazaar there were all kinds of provisions. Nothing was wanting but good government. But this for a long time, the inhabitants were unable to attain.

It is not right to appoint an unfit man, a blind man, one whose parents are not respectable, one who is unable to read and write, or one who is a leper, to such an appointment.

HINDÎ (PRIZE EXAMINATION).

FITZEDWARD HALL, Esq., D.C.L.

Tuesday, 18th June 1878. 10 A.M. to 1 P.M.

PRIZE EXAMINATION CANDIDATES OF 1876.

I.

For translation into English:

a. तब सभा करके शुक और काक को बुलाया। सुआ कुछ सिर उठाए हिये हुए आसन पर बैठकर बोला हिरण्यगर्भ महाराजाधिराज श्रीमान विश्ववर्ण तुम्हें आज्ञा करते हैं। यदि जीवन और श्री से प्रयोजन है तो तुरंत आकर हमारे चरणों को प्रणाम करो। नहीं तो रहने के लिये दूसरे स्थान की चिन्ता करो। राजा ने कोप से कहा अरे कोई हमारे सामने नहीं है जो दुष्ट गरदनिया दे। उठकर वेधवर्ण ने कहा महाराज आज्ञा कीजिये दुष्ट शुक को मार डालता हूं। सर्वज्ञ राजा को और कौवे को शान्त करते हुए बोला पहिले सुनो। वह सभा नहीं जहां वृद्ध नहीं। वे वृद्ध नहीं जो धर्म नहीं बतलाते। वह धर्म नहीं जिस में सत्य नहीं। वह सत्य नहीं जो छल से मिला है। क्योंकि धर्म तो यह है। सच्चा भी दूत वध्य नहीं होता क्योंकि राजा का मुख दूत है। अस्त्रों के उठाए जाने पर भी दूत अन्यथा नहीं कहता। और कि अपना अपकर्ष और पराए का उत्कर्ष दूत के कहे से कौन मानता है। सदा ही अवध्य भाव से दूत सभी कहता है।

b. यद्यपि वायु ऐसी हलकी जान पड़ती है तथापि बहुत भारी पदार्थ है। समुद्र के तीर जो बालू पड़ी रहती है उस के प्रत्येक वर्गात्मक इञ्च पर ऊपर को संचित वायु का बोझ साढ़े सात सेर रहता है। ऐसा ही जो वायु बालू के ऊपर सटी रहती है उस के भी प्रत्येक वर्गात्मक इञ्च के ऊपर उतना ही बोझ निःसंदेह रहता है। परंतु जब पदार्थों पर बोझ धरा जाता है तब वे दबकर सिमट जाते हैं। बड़े ढेर के तले की ऊन

PRIZE EXAMINATION. CANDIDATES OF 1876.

ऊपर की से अधिक सिमटी और सघन होती है। इसी निमित्त जो वायु भूमि के पास रहती है सो वायुमण्डल में बहुत ऊपर को वायु से अधिक सिमटी और सघन होती है। जब मनुष्य ऊंचे पर्वतों पर चढ़ते हैं तब वे घनी वायु में से होकर ऐसी वायु में जा पहुंचते हैं कि जिस के परमाणु अधिक दूर दूर छितरे रहते हैं। जब वे समुद्र के ऊपर तीन मील चढ़ जाते हैं तब वायु के संपूर्ण ढेर का प्राय आधा बोझ उन के तले छूट जाता है यद्यपि शेष भाग पचास मील से अधिक ऊंचे तक फैला रहता है। जो समुद्र की बालू का एक वर्गात्मक इञ्च किसी पर्वत पर तीन मील ऊंचा ले जांय तो साढ़े सात सेर बोझ के स्थान में केवल चार ही सेर वायु का बोझ उस पर रहेगा क्योंकि साढ़े तीन सेर बोझ तले छूट जायगा।

c. अब दृष्टान्त का लक्षण कहते हैं। जिस पदार्थ में लौकिक और परीक्षक इन दोनों की बुद्धि का अविरोध होता है उसे दृष्टान्त कहते हैं। यहां लौकिक कहिये सीखनेवाला और परीक्षक कहिये सिखानेवाला। इस प्रकार से दृष्टान्त वही है जो मतविरोध का विषय नहीं। जैसा किसी शिक्षक ने किसी पुरुष के समझाने को कहा कि पर्वत वह्निमान है इस लिये कि धूमवान है। क्योंकि जो धूमवान है सो वह्निमान है जैसे महानस अर्थात रसोई का घर। तैसा यह है। इस कारण पर्वत वह्निमान है। अथवा समुद्र में वह्नि नहीं है इस लिये कि वह जलमय है। क्योंकि जो जो जलमय है वहां वह्नि नहीं रहती जैसे महाह्रद अर्थात बड़ा तालाब। तैसा समुद्र है। इस कारण समुद्र में भी वह्नि नहीं। इन दोनों उदाहरणों में महानस में वह्नि है और महाह्रद में वह्नि नहीं। इस बात को सीखनेवाला और सिखानेवाला ये दोनों स्वीकार करते हैं। इस लिये वे दोनों दृष्टान्त हैं।

II.

PRIZE EXAMINATION. CANDIDATES OF 1876.

For translation into Hindî:

But here I shall pause a while, to consider some of the objections which are entertained against the wide and general diffusion of education. Persons there are, neither weak in judgment, nor disinclined to benevolence, who doubt its utility on this extended scale. They appeal to their living experience. They think they see an increase of reading, and of the appetite for such kind of knowledge as books can give; and no signs of our people's being made better by it. They suspect that it tends rather to unsettle men in their proper business and duties, and to mar the best habits of their sober and praiseworthy character. They remark, too, not without some disgust, upon the inordinate pretensions of self-conceit, generated by a frivolous superficial learning. But that education of which alone I profess to be the advocate is exempted from the force of these alleged objections.

SANSKRIT (PRIZE EXAMINATION).

Professor E. B. COWELL.

Friday, 21st June 1878. 10 A.M. to 1 P.M.

I.

Translate into English:

जराशोकसमाविष्टं रोगायतनमातुरम् ।
रजस्वलमनित्यं च भूतावासमिमं त्यजेत् ॥
नदीकूलं यथा वृक्षो वृक्षं वा शकुनिर्यथा ।
तथा त्यजन्निमं देहं कृच्छ्राद्वाहादिमुच्यते* ॥
प्रियेषु स्वेषु सुकृतमप्रियेषु च दुष्कृतम् ।
विसृज्य† ध्यानयोगेन ब्रह्माभ्येति सनातनम् ॥

Manu.

* नदीकूलमिति । ब्रह्मोपासकस्य देहत्यागसमये मोक्षः, आरब्धदेहस्य कर्मणो भोगेनैव नाशात् । तच्च देहत्यागं दैविध्यमाह । यः कर्माधीनं देहपातमवेक्षते स नदीकूलं यथा वृक्षस्त्यजति स्वपातमजानन्नेव नदीरयेण पात्यते तथा देहं त्यजन् । यस्य ज्ञानकर्मप्रकर्षात् भीष्मादिवत् स्वाधीनमृत्युः स यथा पक्षी वृक्षं स्वेच्छया त्यजति तथा देहमिमं त्यजन् संसारकष्टाद्वाहादिव जलचरप्राणिभेदादिमुच्यते ॥

† 'ननु परकीयसुकृतदुष्कृतयोः कथं परत्र संक्रान्तिः? । उच्यते। धर्माधर्मव्यवस्थायां शास्त्रमेव प्रमाणं, संक्रमोऽपि तयोः शास्त्रप्रमाणक एव, अतः शास्त्रात् संक्रमणयोग्यावेतौ विधत' अतः शास्त्रेण बाधात् न प्रतिपत्त्यनुमानोदयः

Schol.

PRIZE EXAMINATION. CANDIDATES OF 1876.

II.

अथायदृक्षे मुकुलीकृताङ्गुलौ
समर्पयन्तौ स्फटिकाक्षमालिकाम्।
कथञ्चिदद्रेस्तनया मिताक्षरं
चिरव्यवस्थापितवाग् अभाषत॥
'यथा श्रुतं वेदविदां वर त्वया
जनोऽयमुच्चैःपदलङ्घनोत्सुकः।
तपः किलेदं तदवाप्तिसाधनं,
मनोरथानामगतिर्न विद्यते'॥
अथाह वर्णी 'विदितो महेश्वर-
स्तदर्थिनी त्वं पुनरेव वर्तसे।
अमङ्गलाभ्यासरतिं विचिन्त्य तं
तवानुवृत्तिं न च कर्तुमुत्सहे'॥

Kumára Sambh.

III.

Translate into Sanskrit :

After a few days the prince hastened to see the teacher again who had so eloquently praised self-restraint and patience. He found him sitting in a dark room weeping bitterly. "You are come," he said, "at a time when all human friendship is useless; my only daughter died yesterday and all my hopes and pleasures are ended." "Death," said the prince, "is an event which is always near, and a wise man can never be surprised by it." "Young man, you speak as one who has never felt the pangs of separation." "What!", replied the prince, "have you forgot the precepts which you so powerfully enforced?"

ARABIC (PRIZE EXAMINATION).

Prize Examination. Candidates of 1876.

Colonel J. W. J. Ouseley.

Saturday, 22nd June 1878. 2 P.M. to 5 P.M.

Translate into English:

ولمّا استولي ملو واستقرامر الهند عليه * وبلغه توجه تيمور اليه * جد واجتهد * واعدّ العدد والعدد * واستمدّ الامداد والمدد * واهلك مالا بد * وحسب ان لن يقدر عليه احد * وفرق الاموال * وجمع الخيل والرجال * واحضر مافي مملكته من الافيال * ثم حصن مداينه * ومكن كائنه * وشيد علي الافيال للمقابلة ابراجا * واحكم في تحرير المناضلة طريقة فقه فيها ذهب ومنهاجا * وجد تيمور في السير * حتي كاد يسبق الطير * اذلم يكن له في ذلك الارث من يحجبه * ولا في عساكر سلطان الهند من يقربه * فلما بلغ الهنود بالجنود * برزت اليه بالجنود الهنود * وقد موا الفيول * لتقفني الخيول * وقد بنوا علي كل فيل من الاتراس برجا * وعبوا في كل برج من المقاتلين من يخشي في المضائق ويرجي * بعد ماجعلوها من اكبر كستوانات في حصار * وعلقوا عليها من القلاقل والاجراس الهائلة مايروع العفاريت الى الفرار * وشدوا في خراطيمها سيوفا يصلح ان يقال انها سيوف الهند *

Translate into Arabic:

Issaw Khan had created so many enemies by his haughty conduct that the Prince found no difficulty in collecting a small band on whom he could rely, to execute his orders, and gratify their own malice, when opportunity should offer; and on a day soon after his return, while he sat in his dewan khanah surrounded by these adherents, as one of the sons of Issaw Khan entered to pay his respects, the prince gave the signal for executing his scheme by asking him in a stern voice, "Where is that old dog your father?" The young man astonished and indignant exclaimed, "Have a care, Prince, of what you say; speak of my father in more respectful terms." On this the prince cried to those around him, "Seize and strangle him immediately."

PRIZE EXAMINATION. CANDIDATES OF 1876.

PERSIAN (PRIZE EXAMINATION).

Colonel J. W. J. OUSELEY.

Tuesday, 25th June 1878. 10 A.M. to 1 P.M.

I.

To be translated into English:

بر آبادیِ راه هي برد رنج — دران ریگ چون ریگ مي ریخت گنج
نخستین عمارت بدریا کنار — بناکردشهري چوخرم بهار
بآبادی وروشني چون بهشت — همش جاي بازار و هم جاي کشت
باسکندر آن شهر چون شد تمام — هم اسکندریش نهادند نام
چوپرداخت آن نغز بنیادرا — که مانند شد مصر و بغدادرا
بیونان شدن کشت عزمش درست — که آنجارودمرد کاید نخست
زدریا کذرکرد و آمد بروم — جهان نرم در زیر مهرش چو موم
بآن موم چون رغبتش خواستي — بکردي از و هرچه مي خواستي

والحق بملاحظهٔ این دریافت بعضے از سادہ لوحان که رقم انکاربدین صنعت بدیع کشیدہ بودند سرخجالت در گریبان عبرت فرو بردہ نقش نگاررا قرار گشتند و چون نقش و نگار آئین تصویر نکاشته لوح بیان شد بتازگي بطوري خاص حال خط نیزظهور یافت که خط قسمي ست از تصویرچه آن شبیه آراي عالم علوی و سفلی ست اگرچه در بسیارجا صور اشیا نگارش مي یابدامابسا از قدسی نژاد ان معنی‌را نیز درین پکیر غرابت بخش آوردہ جمال آرمیشود و بسا از معاني خلقي‌را در حالت تصویر در آوردہ آدمي صورت پرست‌را ازین‌راه بمنزلگاہ معنی‌راهبري میکنند وخط تصویرخاص ست که صور حروف‌را که هرطائفه برای فهمیدگے و فهمانیدگي مطالب و مقاصد قرار دادہ اند بطرزی مخصوص نقش میکنند همان طور که در عموم تصویرات صورت بزدي صورت دلالت میکند

II.

PRIZE EXAMINATION. CANDIDATES OF 1876.

Translate into Persian:

Praise be to God, that from the commencement of my reign to the present time, and from the first dawn of my prosperity, all my intentions and endeavours have been to regulate and benefit mankind. The blessing of God alone upon the rectitude of my conduct has enabled me to subdue, and acquire possession of the vast country of Hindostan, shared and governed as it was by so many powerful monarchs. Sundry tribes, too, who in lofty mountains, strongholds, and inaccessible posts, refused to bow the heads of submission, and pursued the paths of opposition, now tread the road of loyalty and obedience, and many tribes, though differing in names and customs, now maintain a friendly intercourse with each other.

[*Papers were also set in Marathi and Tamil.*]

INDIAN PUBLIC WORKS AND TELEGRAPH DEPARTMENTS, 1878.

6.—EXAMINATION PAPERS SET AT THE EXAMINATION OF JULY 1878 FOR ADMISSION TO THE INDIAN PUBLIC WORKS AND TELEGRAPH DEPARTMENTS.

REGULATIONS.

INDIAN PUBLIC WORKS DEPARTMENT: ARRANGEMENTS for the OPEN COMPETITION of JULY 1878 for ADMISSION to the ROYAL INDIAN ENGINEERING COLLEGE.

The following extract from the Prospectus of the Royal Indian Civil Engineering College, Cooper's Hill, for 1878, will show the regulations under which the open competition of 1878 was held:—

2. Admission to the College is obtained by competitive examination, at which all British-born subjects, between the ages of 17 and 20 years on the 1st day of July 1878,* of sound constitution, free from any serious physical defects that would render them unfit for service in the Public Works Department, and of good moral character, will be admissible. Evidence as to age and character must be sent to the Civil Service Commissioners not later than June 1st, 1878. If this should be *primâ facie* satisfactory, applicants will be allowed to compete; but further evidence as to character may be required from the successful candidates,† who will also be subjected to a medical examination by the Medical Board at the India Office before being admitted to the College.

3. The course of special education for the candidates selected by this competition extends over three years, and all the students who pass through it successfully, including such of them as, instead of entering the Cooper's Hill College, prefer to undergo their course of preparation elsewhere, and succeed in passing the same final test of qualification as the students of the College (*see* art. 17), will be appointed to the Indian Public Works Department as Assistant Engineers; nine-tenths as Assistant Engineers, Second Grade, and the remaining one-tenth as Assistant Engineers, Third Grade. The present Indian rates of salary of these appointments are Rs. 4,200 and Rs. 3,000 per annum respectively.

Provided, nevertheless, that of the one-tenth last mentioned, any student may be appointed to the Second Grade in the event of his being certified to have passed a sufficiently creditable examination.

The passed students will all be provided with a free passage to India, either on leaving the College, or after undergoing a course of practical engineering in England, as may be provided hereafter (*see* art. 21).

4. The competitive examination for 1878 will be held in the latter end of June or beginning of July, under the orders of the Civil Service Commissioners, and will embrace the following subjects:—

	Marks assigned.
(1.) English (Composition, History, and Literature) -	750
(2.) Mathematics (pure and mixed) - - -	2,500
(3.) Latin (translation from and into) - - -	1,000
(4.) Greek (ditto) - - - -	1,000

* In the examination to be held in 1879, the maximum limit of age will be fixed at 19 years.

† The needful forms of application, with instructions for filling them up and as to the nature of the evidence required, may be obtained from the Secretary, Civil Service Commissioners, Cannon Row, Westminster, S.W., at any time after May 1, 1878.

		Marks assigned.
(5.)	French (translation from and into, and dictation) -	750
(6.)	German (ditto) - - - -	750
(*7.)	Inorganic chemistry - - - -	700
(*8.)	Heat and light - - - - -	700
(*9.)	Electricity and magnetism - - -	700
(*10.)	Geology and physical geography - - -	700
(11.)	Mechanical Drawing of geometrical figures, plane and solid, use and construction of scales, perspective - - - - -	500
(12.)	Freehand (figure and landscape) drawing - -	500

5. Of these subjects two will be compulsory, viz. :—

(1.) English composition to the extent of a candidate's being able to write grammatically and with correct spelling. An exercise will also be given in writing English from dictation.

(2.) The following branches of mathematics, viz., arithmetic, algebra, geometry (first four and sixth books of Euclid), mensuration, plane trigonometry, and the elements of statics and dynamics, in each of which the candidate will be required to show competent proficiency.

The examination in English Literature will be limited to the following authors :—

Shakespeare - -	King Lear.
	Richard III.
Dryden (Christie's Edition)	Stanzas on Cromwell.
	Astrea Redux.
	Annus Mirabilis.
	Absolom and Achitophel.
Burke - - -	Letters on a Regicide Peace.
Trench - - -	On the Study of Words.

The examination in English History will be limited to the period from 1793 to 1820.

6. A deduction of 200 marks will be made from the marks gained by a candidate in each subject at the competitive examination, except mathematics, in which there will be no deduction, and mechanical drawing, in which only 100 marks will be deducted. But a part or the whole of such deduction may be remitted in cases of special proficiency exhibited in any subject.

7. The 35 candidates who, qualifying in the obligatory subjects, obtain the highest aggregate number of marks, will be eligible for admission to the College.

INDIAN TELEGRAPH DEPARTMENT.

[Appointments made by limited competition among candidates nominated by the Secretary of State for India.

The scheme of examination is the same as that for the Royal Indian Engineering College *above*.]

---

* No candidate may take up more than three out of these four subjects.

INDIAN PUBLIC WORKS AND TELEGRAPH DEPARTMENTS, 1878.

TIME TABLE of the EXAMINATION of CANDIDATES for ADMISSION to the INDIAN PUBLIC WORKS DEPARTMENT, and of CANDIDATES for ADMISSION to the INDIAN TELEGRAPH DEPARTMENT, July 1878.

The Subjects printed in Italics are obligatory.

Place.	Time.	Subjects of Examination.
The South Exhibition Galleries, South Kensington (entrance in Exhibition Road).	Tuesday, 16th July.	
	10 a.m. to 1 p.m.	*Algebra.*
	2 p.m. to 5 p.m.	*Euclid.*
	Wednesday, 17th July.	
	10 a.m. to 1 p.m.	*English Composition and Dictation.*
	2 p.m. to 5 p.m.	*Arithmetic and Mensuration.*
	Thursday, 18th July.	
	10 a.m. to 1 p.m.	*Statics and Dynamics.*
	2 p.m. to 5 p.m.	*Trigonometry.*
	Friday, 19th July.	
	10 a.m. to 1 p.m.	Pure Mathematics. (1.)
	2 p.m. to 5 p.m.	English History.
	Saturday, 20th July.	
	10 a.m. to 1 p.m.	Pure Mathematics. (2.)
	2 p.m. to 5 p.m.	English Literature.
	Monday, 22nd July.	
	10 a.m. to 1 p.m.	*Heat and Light.
	2 p.m. to 5 p.m.	Geometrical Drawing.(1.)
	Tuesday, 23rd July.	
	10 a.m. to 1 p.m.	*Electricity and Magnetism.
	2 p.m. to 5 p.m.	*Geology and Physical Geography.
	Wednesday, 24th July.	
	10 a.m. to 1 p.m.	Mixed Mathematics.
	2 p.m. to 5 p.m.	Latin (Prose).
	Thursday, 25th July.	
	10 a.m. to 2 p.m.	Freehand Drawing.
	3 p.m. to 5 p.m.	
	Friday, 26th July.	
	10 a.m. to 1 p.m.	French (Translation from and into, and Dictation).
	2 p.m. to 5 p.m.	Latin (Verse).
	Saturday, 27th July.	
	10 a.m. to 1 p.m.	Geometrical Drawing.(2.)
	2 p.m. to 5 p.m.	Geometrical Drawing.(3.)
	Monday, 29th July.	
	10 a.m. to 1 p.m.	Chemistry.
	2 p.m. to 5 p.m.	German (Translation from and into, and Dictation).
	Tuesday, 30th July.	
	10 a.m. to 1 p.m.	Greek (Prose).
	2 p.m. to 5 p.m.	Greek (Verse).

* In these subjects there will be an oral examination, and there will also be an examination in Practical Chemistry.

Notice will be given hereafter of the days, hours, and places of these examinations to the candidates selecting the subjects.

NOTICES.

1. On the first day of the Examination, each Candidate will be required to state on a form which will be placed before him his address during the Examination. If this address is changed, notice of every change should be sent to "The Secretary, Civil Service Commission, Westminster," until the Candidate has received the announcement of the result of the Examination.

   N.B.—To Candidates who fail to qualify in any of the obligatory subjects, notice of the fact will be communicated as soon as possible. Such Candidates will not proceed further with the Examination, and no marks will be assigned to their papers.

2. The Examination will in each case begin at the time named in the foregoing List, but the door of the Examination Room will be kept open for half an hour afterwards, in order that Candidates may not be excluded owing to accidental delays. Candidates arriving after the expiration of that half hour will not be admitted.

3. Candidates will be required, before proceeding to the Examination Rooms, to leave, in a room provided for the purpose, their hats, overcoats, umbrellas, and any books or papers which they may have brought with them.

4. No Candidate will be allowed to quit the Examination Room on any day until the expiration of half an hour from the time fixed for the commencement of the Examination.

5. No Candidate who has left the Examination Room during the hours assigned to paper work will be permitted to return to the paper which he has quitted, *except on the day of Examination in Freehand Drawing*.

6. Candidates wishing for explanation of the meaning of any of the questions before them may apply to the Superintendent of the Examination Room. With this exception, perfect silence is to be preserved in the Examination Room; and any Candidate guilty of disorderly or improper conduct in or about the Room will be liable to be excluded from the Examination.

7. Any Candidate detected in the use of a book or manuscript brought with him for his assistance, or in copying from the papers of any other Candidate, or in giving or receiving assistance of any description, will be regarded as disqualified, and his name will be removed from the List.

8. Candidates who take up Freehand Drawing must bring their own Drawing Pencils and Brushes; but Drawing Paper, Drawing Boards, Colours, Indian Ink, and Palettes will be supplied to them by the Commissioners. For the Examination in Geometrical Drawing Candidates should bring their own Drawing Pencils and Brushes, and also Mathematical Instruments.

9. A Table showing the total marks obtained at the Examination will be sent to each Candidate who qualifies in the obligatory subjects.

Civil Service Commission,
Cannon Row, S.W.,
June 1878.

INDIAN PUBLIC WORKS AND TELEGRAPH DEPARTMENTS, 1878.

SUBJECTS FOR ENGLISH COMPOSITION

Wednesday, 17th July 1878. 10 A.M. to 1 P.M.

(Including Dictation.)

N.B.—*In this Exercise, attention should be paid to ha spelling, punctuation, grammar, and style.*

I. Describe the life which you expect to lead in Indi you be successful in this competition;

Or,

II. The Telephone and Phonograph;

Or,

III. Describe any forest, such as the New Forest, w may have seen.

One subject only is to be attempted.

DICTATION.

The retired servants of the East India Company soon b unpopular class of men. Some of them had in the l eminent talents, and rendered great services to the state; their talents were not shown to advantage, and their little known. That they had sprung from obscurity, acquired great wealth, that they exhibited it insolently, t it extravagantly, that they raised the price of everyt neighbourhood, from fresh eggs to rotten boroughs, that outshone those of dukes, that their coaches were finer th Lord Mayor, that the examples of their large and ill-go holds corrupted half the servants in the country, that with all their magnificence, could not catch the tone of good society, but, in spite of the stud and the crowd of menials, of the plate and the Dresden china, of the venison and the Burgundy, were still low men; these were things which excited, both in the class from which they had sprung and in the class into which they attempted to force themselves, the bitter aversion which is the effect of mingled envy and contempt. But when it was also rumoured that the fortune which had enabled its possessor to eclipse the Lord Lieutenant on the race-ground, or to carry the county against the head of a house as old as Domesday Book, had been accumulated by violating public faith, by deposing legitimate princes, by reducing whole provinces to beggary, all the higher and better as well as all the low and evil parts of human nature were stirred against the wretch who had obtained by guilt and dishonour the riches which he now lavished with arrogant and inelegant profusion. The unfortunate Nabob seemed to be made up of these foibles against which comedy has pointed the most merciless ridicule, and of those crimes which have thrown the deepest gloom over tragedy. A tempest of execration and derision burst on the servants of the Company.

INDIAN PUBLIC WORKS AND TELEGRAPH DEPARTMENTS, 1878.

ENGLISH HISTORY (1793 to 1820).

Friday, 19th July 1878. 2 P.M. to 5 P.M.

1. Describe the policy of the administration of "All the Talents," with especial reference to the views of Mr. Fox.
2. Explain the retention of Mr. Percival in office by the Prince Regent, on his assuming the goverment of the country in 1811.
3. Show how Great Britain, during the war with France, asserted both theoretically and practically the Right of Search, and state the consequences of that assertion.
4. What were the causes, real and alleged, of the general depression of trade and agriculture after the conclusion of peace in 1815?
5. State the main features of the plan of the government for the resumption of cash payments in 1819.
6. Five some account of the storming of Seringapatam and the battle of Assaye.
7. Sketch the military operations which resulted in the repulse of of Massena from the lines of Torres Vedras.
8. What grave constitutional question arose upon the attempt of George III. to impose restrictions on the Grenville ministry in 1807?
9. What were the terms of the general peace concluded after the battle of Waterloo?
10. Give some account of the political enthusiasts of different parties who were combined in the attempt to revolutionize Ireland.
11. What were the inducements in consideration of which the English ministry supported the annexation of Belgium to Holland at the end of the war?
12. Account for the stability of the political and social institutions of Great Britain, under the severe trials to which they were exposed between 1793 and 1814.

ENGLISH LITERATURE.

Saturday, 20th July 1878. 2 P.M. to 5 P.M.

SHAKESPEARE (Richard III., King Lear).

1. From what sources did Shakespeare derive the materials for the character of Richard III.? Are there any grounds for supposing that the character as represented in the play is contrary to the truth of history?
2. Give an analysis of the second Act of King Lear.
3. Explain:
   (*a.*) How long have you been a sectary astronomical?
   (*b.*) Renege, affirm, and turn their halcyon beaks
   With every gale and vary of their masters.
   (*c.*) O undistinguisht space of woman's will!
   (*d.*) Clarence is come,—false, fleeting, perjured Clarence,—
   That stabbed me in the field by Tewkesbury.
   (*e.*) O Pomfret, Pomfret! O thou bloody prison!
   (*f.*) The Bretagne Richmond aims
   At young Elizabeth, my brother's daughter.

INDIAN PUBLIC WORKS AND TELEGRAPH DEPARTMENTS, 1878.

DRYDEN (Stanzas on Cromwell, Astræa Redux, Annus I
Absolom and Achitophel).

4. Name the chief characters in Absolom and Achitopl
historical personages whom they represent, showing
allegory is appropriate.
5. How far was Dryden sincere in his praises of Cr
Charles II.?
6. "The description of the Fire in the 'Annus Mirabilis
by resolute meditation, out of a mind better forme
than to feel." Examine this criticism.
7. Explain:
(*a.*) He would not, like soft Otho, hope prevent,
But stayed and suffered Fortune to repent.
(*b.*) Treacherous Scotland to no interest true.
(*c.*) The Belgians did retire
Before the patron saint of injured Spain.
(*d.*) Then the next heir, a prince severe and wise,
Already looks on you with jealous eyes.
(*e.*) A vare of justice.

BURKE (Letters on a Regicide Peace).

8. What two classes of men, according to Burke, were cl
mental in determining the course of the French
What does he say of their respective motives?
9. Who or what were Vergniaud; the Jacobins; the
Jinghiz Khan; Lord Malmesbury; The Treaty of E

TRENCH on the Study of Words.

10. Trace the historical changes of the words pagan, sacra
chin, Gothic, dunce, lumber, jovial, legend.
11. "An account of the relations in which the English s
" occupants of this land stood to one another migl
" from an intelligent study of the contributions whic
" severally made to the English language as bequ
" jointly by them both." Illustrate this.

ALGEBRA (OBLIGATORY).

Tuesday, 16th July 1878. 10 A.M. to 1 P.M.

1. Add together $y+z-x$, $z+x-y$, $x+y-z$, and $x+y+$
the value of the resulting expression when

$$3x=5y=7z=210;$$

also add together—

$(x+y)\,a+(y+z)\,b$, $(y-z)\,a+(x-y)\,b$, and $(z-$

2. Prove that—

$$(x-y+z)(x+y-z)-(x+y+z)(x-y-z)=4yz,$$

and verify this when $y=z=3$.

Simplify the expression—

$$(x+y)^2-\{2x^2+2y^2-(2-x-y)^2-(x-z)(y-z)-(x+$$

3. Multiply—

$$x^4+2x^3y+4x^2y^2+8xy^3+16y^4 \text{ by } x-2y;$$

and divide—

$$x^4-5x^3+11x^2-12x+6 \text{ by } x^2-3x+3.$$

INDIAN PUBLIC WORKS AND TELEGRAPH DEPARTMENTS, 1878.

4. Multiply—

$x+14\sqrt{x}+48$ by $x-12\sqrt{x}+35$,

and divide the product by $x+\sqrt{x}-30$.

5. Resolve into factors—

$4x^2-17x+4$, and $(a-b)^2x^2-2x(a^2-b^2)+4ab$.

Simplify the expression—

$$\frac{x^2-6x+8}{x^2-4x+3}\times\frac{x^2-5x+6}{x^2-2x-8}\div\frac{(x-2)^2}{x^2-1}.$$

6. If y varies as the sum of two quantities, one of which varies as x, and the other varies as x^2, and if when $x=1$, $y=2$, and when $x=2$, $y=3$, find the equation between x and y.

7. Find a number which when multiplied by 9 exceeds 50 as much as 50 exceeds the original number.

8. A starts from a place C, and travels towards a place D at the rate of six miles an hour. Two hours afterwards B starts also from C, and, travelling 10 miles an hour, arrives at D four hours before A. Find the distance between C and D.

9. Solve the equations—

(1.) $\frac{x+2}{x-4}+\frac{x-4}{x-6}=2$.

(2.) $12x^2-71x+99=0$.

(3.) $\left.\begin{aligned}3\sqrt{x}-2\sqrt{y}&=7\\7\sqrt{x}-3\sqrt{y}&=18\end{aligned}\right\}$.

(4.) $\left.\begin{aligned}xy+x+y&=27\\\frac{1}{x}+\frac{1}{y}&=\frac{1}{2}\end{aligned}\right\}$.

10. A person spends £20. 8*s*. in purchasing a certain number of bottles of sherry and claret. He pays as many shillings per dozen for each kind of wine as he buys bottles of that wine. If he had paid as many shillings per dozen for each as he bought bottles of the other he would have spent £18. How many bottles of each did he buy ?

11. Define arithmetic, geometric, and harmonic progression.

Insert two arithmetic means, two geometric means, and two harmonic means between 24 and 81.

12. Having given the first and second terms of an arithmetical progression, find the nth term.

In an arithmetical progression the first term is $\frac{1}{2}$, and the constant difference $\frac{1}{3}$. Find the number of terms whose sum is 48.

13. Assuming the Binomial Theorem for a positive integral index, prove the theorem for a positive fractional index.

If n be a positive integer, find the sum of the coefficients in the expansion of $(1+x)^n$, and prove that the sum of the squares of these coefficients is equal to $\frac{\lfloor 2n}{(\lfloor n)^2}$.

INDIAN PUBLIC WORKS AND TELEGRAPH DEPARTMENTS, 1878.

14. Find the sums of each of the following series, continued to infinity:

(1.) $15+10+\frac{20}{3}+\frac{40}{9}+\ldots$

(2.) $1+\frac{1}{2}\cdot\frac{1}{2}+\frac{1.3}{2.4}\cdot\left(\frac{1}{2}\right)^2+\frac{1.3.5}{2.4.6}\left(\frac{1}{2}\right)^3+\ldots\ldots$

EUCLID (OBLIGATORY).

Tuesday, 16th July 1878. 2 P.M. to 5 P.M.

1. If two triangles have two sides of the one equal to two sides of the other each to each, but the angle contained by the two sides of the one greater than the angle contained by the two sides equal to them of the other, the base of that which has the greater angle shall be greater than the base of the other.
2. If a straight line fall on two parallel straight lines, it makes the alternate angles equal to one another, and the exterior angle equal to the interior and opposite angle on the same side; and also the two interior angles on the same side together equal to two right angles.
3. Triangles upon the same base and between the same parallels are equal to one another.

   Let ABC, ABD, be two equal triangles upon the same base AB, and on opposite sides of it; if CD be joined meeting AB in E, show that CE=DE.
4. A straight line BC is divided in G, and on BC and BG on opposite sides of BC are described the squares ABCD, BEFG. A point P is taken between A and B, so that E P=AB, and PF is joined. The parallelogram FPDN is drawn: show that it is a square equal to the sum of the other two, and that the triangles PAD, DCN, are equal in all respects.
5. If a straight line be bisected and produced to any point, the square on the whole line thus produced, and the square on the part of it produced, are together double of the square on half the line bisected, and of the line made up of the half and the part produced.
6. The angle at the centre of a circle is double of the angle at the circumference on the same base.

   If a chord be drawn through one of the two points of intersection of two circles, to cut the two circles, its whole length will subtend a constant angle at the other point of intersection.
7. If from any point without a circle two straight lines be drawn, one of which cuts the circle and the other meets it; the rectangle contained by the whole line which cuts the circle, and the part of it without the circle, shall be equal to the square on the line which touches it.
8. Inscribe a circle in a given square.

   If a straight line is drawn touching the circle at any point, show that the segment intercepted upon it by any two opposite sides of the square subtends a right angle at the centre of the circle.
9. Describe a square which shall be equal to a given rectangle.
10. Find a mean proportional between two given straight lines.

11. If the vertical angle of a triangle be bisected by a straight line which likewise cuts the base; the rectangle contained by the sides of the triangle is equal to the rectangle contained by the segments of the base, together with the square on the line that bisects the base.

Indian Public Works and Telegraph Departments, 1878.

ARITHMETIC AND MENSURATION.

Wednesday, 17th July 1878. 2 P.M. to 5 P.M.

1. Add together $6\frac{1}{7}$, $4\frac{5}{8}$, $3\frac{3}{14}$, $\frac{5}{28}$, and $\frac{11}{12}$.
2. Subtract $5\frac{11}{17}$ from $7\frac{1}{51}$.
3. Multiply together $1\frac{2}{9}$, $\frac{3}{11}$, $3\frac{4}{13}$, $2\frac{1}{10}$, and $\frac{5}{12}$.
4. Divide $8\frac{13}{19}$ by $1\frac{27}{57}$.

---

5. Add together 27·170, ·002090, 381·9340, and ·0721653.
6. Subtract 376·9429 from 810·0371.
7. Multiply 31·079 by ·00426.
8. Divide 75·049 by 251.
9. Express 15*s.* $8\frac{1}{2}$*d.* as the decimal of 1*l.* 3*s.* 4*d.*

---

10. Add together $\frac{19}{143}$, $5\frac{6}{13}$, and $\frac{7}{11}$.
11. Subtract $17\frac{2}{9}$ from $29\frac{5}{8}$.
12. Multiply together $3\frac{5}{8}$, $1\frac{3}{13}$, $5\frac{11}{12}$, $\frac{24}{25}$, and $\frac{32}{40}$.
13. Divide $11\frac{3}{13}$ by $5\frac{1}{7}$.

---

14. Add together 5·031 of a mile and ·375 of a furlong, and give the answer in yards.
15. Subtract 11·079 of an ounce from 3·101 of a pound troy.
16. Multiply 9·20407 by ·0927.
17. Divide 36·154 by ·0073 to three places of decimals.
18. Express 2·07831 cwt. as cwts. qrs. lbs. ozs.

N.B.—*The first eighteen questions should be answered before the others are attempted.*

Use a separate book for these questions.

19. Multiply by duodecimals 3 ft. 9 in. 3 pts. by 4 ft. 6 ins. 7 pts., and express the product in square feet, square inches, and the fraction of a square inch.
20. The sides of an oblong field containing 6 acres are as 4 to 3. Find, within an inch, the length of the diagonal.
21. Find the square root of $501\frac{12}{169}$ and the cube root of 629·422793.
22. A cubical block of stone weighs 325 tons 8 cwt. 3 qrs. 20 lbs., and each cubic foot weighs 125 lbs.; what are the dimensions of the block?
23. If I lend a friend 400*l.* for 9 months when the current rate of interest is $3\frac{1}{2}$ per cent., for how long ought he to lend me in return 220*l.*, when the rate of interest is $4\frac{1}{2}$ per cent.?
24. A rectangular grass plot is 20 yards long and 15 yards wide and has a gravel path round it of uniform width.

    The area of the grass is to that of the path as 6 to one. Find the width of the path.

INDIAN PUBLIC WORKS AND TELEGRAPH DEPARTMENTS, 1878.

25. The extreme length of an oblong tent with semi- 60 yards and its width 20 yards. Find the n feet of ground covered by it.

26. The diameter of the base of a circular cone is 3 f height 7 feet, find the area of the convex surface

STATICS AND DYNAMICS (OBLIGATO

Thursday, 18th July 1878. 10 A.M. to 1

STATICS.

1. If the parallelogram of forces hold for the direction of P and Q, and also of P and R, prove that it direction of the resultant of P and Q+R.

   Define the resolved part of a force in any direction. If the resolved part of P in the direction OA be m times that of Q in the same direction, and if the resolved part of P in another direction OB be m times that of Q in this other direction, prove that $P=m\,Q$.

2. Find the resultant of two parallel forces in the same direction.

   A man seated in a boat, with its stern towards the shore, pulls the handle of each of a pair of sculls with the force P. Find the force with which a man on the shore must pull a horizontal chain fastened to the stern of the boat in order to keep it at rest, each scull being divided at the rowlock in the ratio of $m : n$.

3. Prove that every system of forces in one plane on a rigid body may be replaced by a couple and by a force acting through any point in the plane rigidly connected with the body.

   If a system of three such forces be fully represented by the lines OA, OB, and OC, and if L, M, and N, be the couples according as the resultant force acts at A, B, or C respectively, prove that—

$$L+M+N=0.$$

4. Find the centre of gravity of any system of heavy particles.

   A body consists of two parts A and B. If the part B be moved while A remains fixed, prove that the centre of gravity of the whole body moves parallel to the line of motion of the centre of gravity of B.

5. If three forces in one plane keep a body at rest, prove that they must either be parallel or meet in one point.

   The square ABCD is supported with the angle A in contact with a smooth wall by the string BE equal in length to AB attached to the point E vertically above A.

   Prove that $\tan BAE = \frac{1}{3}$.

6. Find the power P which will support the weight W by means of a system of weightless pulleys each hanging by a separate string.

   If the pulleys have each the weight w, and if P_1 be the power required to support W in this case, prove that P_1-w will support $W-w$ by means of a system of the same number of weightless pulleys.

DYNAMICS.

INDIAN PUBLIC WORKS AND TELEGRAPH DEPARTMENTS, 1878.

1. Find the space described from rest in time t by a particle moving with a uniform acceleration.

   A stone dropped from the top of a tower falls through $\frac{16}{25}$ of the height in the last second of its fall. Find the height of the tower, g being 32.

2. A bird rises and flies horizontally with the velocity u at an angle of 135^c with the line joining the bird and a sportsman, and at a height from the ground equal to that of the sportsman's shoulder. In what direction should the sportsman fire if the shot have a velocity $=(\sqrt{3}+1)\,u$, supposing the shot to move horizontally?

3. The path of a projectile is a parabola.

   If the velocity and angle of projection of a projectile be v and α respectively, prove that after the time $\frac{v}{g \sin \alpha}$ the projectile will be moving perpendicularly to the direction of projection.

4. Find the time of descent from rest down a smooth inclined plane, and the proportion in which the time is increased when the plane is rough, the coefficient of friction being μ.

5. Find the acceleration when two unequal weights are connected by a string which passes over a smooth pulley.

   Two inclined planes AB and AC have a common altitude AD and are each inclined to the horizon at the angle 30°.

   Any number of trucks each weighing 5 cwt., and each containing one ton of ballast, are placed upon the plane AB and connected by a rope passing over the point A with the same number of similar empty trucks on the plane AC.

   If there be no friction, find the time of passing over the first 30 yards from rest.

6. Find the velocities of two spheres of given masses and elasticity after direct impact.

   Prove that in such a case there is, in general, loss of kinetic energy. What becomes of the energy thus lost?

PLANE TRIGONOMETRY.

Thursday, 18th July 1878. 2 P.M. to 5 P.M.

1. Prove that the circumferences of circles vary as their radii. Explain the advantages of measuring angles by the English, French, and circular methods respectively.

   The angles of a triangle are in geometrical progression, and the number of grades in one is to the circular measure of another as $50 : \pi$; find the two solutions.

2. Find the other five trigonometrical ratios of an angle in terms of its co-tangent.

   Prove that if two angles have the same sine, and also any of the other five trigonometrical ratios (with one exception) the same, they will differ by a multiple of 2π.

Show how to express $a \sin\theta + b\cos\theta$ in the form $c \sin\varphi$ where c is a constant, and hence trace the changes in—

$$\sin\theta + \sqrt{3}\cos\theta$$

as θ varies from 0 to 2π.

Prove the formula for cos (A−B) taking a figure in which—

$$A = 260°,\ B = 120°.$$

If sin (A−B)=sin A+sin B, prove that either A or B or A—B must be an exact number of right angles.

Eliminate θ and φ from—

$\sin^2\theta\cos\gamma = \cos\alpha$, $\sin^2\varphi\cos\gamma = \cos\beta$, and $\tan\theta\tan\alpha = \tan\varphi\tan\beta$.

If A+B+C=π, prove that—

tan A+tan B+tan C=tan A tan B tan C,

and that—

$$\cot\frac{A}{2} + \cot\frac{B}{2} + \cot\frac{C}{2} = \cot\frac{A}{2}\cot\frac{B}{2}\cot\frac{C}{2}.$$

Express sin 3A and cos 3A in terms of sin A and cos A.

Show how to solve a triangle having given two sides and the included angle.

Change the formula $a^2 = b^2 + c^2 - 2bc\cos A$ into one adapted for logarithmic computation.

Write down the formula for the sine and cosine of any angle of a triangle in terms of the sides. Find the area of a triangle in terms of two sides and the included angle. Hence deduce an expression for the area in terms of the sides only.

The sides of a quadrilateral taken in order are 4, 5, 8, 9, and one diagonal is 9; find its angles and area.

Find, the distance between two inaccessible objects on a horizontal plane.

Find by the measurement of straight lines only, the position of an inaccessible object on a horizontal plane.

Prove that the sum of the radii of the escribed circles of a triangle is equal to the radius of the inscribed circle together with twice the diameter of the circumscribed circle.

Construct geometrically, *or* solve trigonometrically, a triangle in which the base, the radius of the inscribed circle, and the radius of the circle escribed on the base, are given.

PURE MATHEMATICS. (1.)

Friday, 19th July 1878. 10 A.M. to 1 P.M.

Establish the exponential expressions for sin θ and cos θ.

If $C + Si = e^{re^{i\theta}}$, where $i = \sqrt{-1}$, find the rational values of C and S.

INDIAN PUBLIC WORKS AND TELEGRAPH DEPARTMENTS, 1878.

2. Prove that—

(1.) $\text{Sin}\,\theta=\theta\left(1-\frac{\theta^2}{\pi^2}\right)\left(1-\frac{\theta^2}{2^2\pi^2}\right)\left(1-\frac{\theta^2}{3^2\pi^2}\right)$ &c.

(2.) $\frac{1}{\sqrt[2]{-1}}\log\frac{x-\sqrt{-1}}{x+\sqrt{-1}}=\tan^{-1}x.$

3. Find the equations of the straight lines which bisect the angles included by the straight lines—

$$A_1x+B_1y+C_1=0, \qquad A_2x+B_2y+C_2=0.$$

Prove that the lines—

$$(\sqrt{3}+1)\,y+(\sqrt{3}-1)\,x-2\sqrt{3}=0.$$

$$(\sqrt{3}-1)\,y+(\sqrt{3}+1)\,x-2\sqrt{3}=0.$$

$$x-y=0,$$

meet in one point, and that each bisects one of the angles between the other two.

4. Find the equation to the normal at the point $(x_1\ y_1)$ to the circle $x^2+y^2=r^2$.

Find the equation of the tangent to the circle—

$$(x-a)^2+(y-b)^2=r^2$$

at the point whose co-ordinates are x_1+a, y_1+b.

5. Investigate the polar equation of a parabola, referred to the focus as pole.

Show that the middle points of all focal points of a parabola lie on an equal parabola whose vertex is at the focus of the former.

6. If SX, SY are the perpendiculars from the focus S of a parabola upon the tangent and normal respectively at any point on the curve, prove that XY is parallel to the axis.

7. Find the equation of an ellipse, defined as the locus of a point the sum of whose distances from two fixed points is constant.

8. Prove that in an ellipse the normal at any point, and in a hyperbola the tangent, bisects the angle between the focal distances of that point.

9. The tangent and normal at any point on a hyperbola meet the transverse axis in T and G respectively, and CA, CB are the semi-axes. Prove that $CT\,.\,CG=CA^2+CB^2$.

10. If $f(x)=0$ represent any algebraical equation, and $f(a)=0$, prove that $x-a$ is a factor of $f(x)$.

It is observed that 3 and -1 are roots of the equation—

$$x^4-4x^3+8x+3=0.$$

What are the other roots?

11. Solve the equation—

$$x^3-10x^2+29x-20=0,$$

one of the roots of which is equal to the sum of the other two roots.

PURE MAT

Saturday, 20th Jul

Assuming the Binomial The
for log $(1+x)$, investiga
x^n and log x, showing ho
involved in the proofs.

Differentiate—

(1.) $\dfrac{\sqrt{a+x}+\sqrt{a-x}}{\sqrt{a+x}-\sqrt{a-x}}$.

(2.) $\sqrt{\dfrac{1-x^3}{1-x+x^2}}$.

(3.) $\dfrac{x\sin^{-1}x}{\sqrt{1+x^2}}$.

(4.) $\cos^{-1}\dfrac{x^n}{n}$.

Enunciate and prove Leibnit

If $y^2=a-bx^2$, prove th

$$\frac{d^2y}{dx^2}+\frac{1}{y}\left(\frac{dy}{dx}\right.$$

If y and x be both functions

$$\frac{d}{dy}\left(\frac{dz}{dx}\right)=\frac{d}{dx}$$

If y be a function of x,

$$\frac{d^3y}{dx^3}\cdot\frac{dy}{dx}-3\left($$

in terms of differential coe

Enunciate Lagrange's Theor
for the expansion of $f(x+$

If $f(x+h)$ be $\tan\left(\frac{\pi}{4}+\right.$
what limits of h, will the

If $\dfrac{du}{dx}=x(x-1)^2(x-2)$, fin
of u, explaining a certain

Assuming that the circle of c
three consecutive points
terms of x and y.

Prove the formula $\rho=r$
with *either* the centre *or* f

Prove the fundamental theo
mation.

Integrate $\sqrt{x^2+a^2}\,dx$, $\dfrac{x\,dx}{x^2+5x+6}$ and $\dfrac{e^x\,dx}{1+e^{2x}}$.

INDIAN PUBLIC WORKS AND TELEGRAPH DEPARTMENTS, 1878.

9. Investigate $\int_0^{\frac{1}{2}\pi} \sin^n x\, dx$.

Hence, or otherwise, find $\int_0^a x^3 \sqrt{a^2-x^2}\, dx$.

10. Find the area of the curve—

$$r=a\,(1+\cos\theta).$$

11. Show how the equations to a straight line in space involve four arbitrary constants. Find the equation to a straight line (1) joining two given points, (2) parallel to a given straight line, (3) cutting two given straight lines, (4) cutting two given straight lines and parallel to a third.

MIXED MATHEMATICS.

Wednesday, 24th July 1878. 10 A.M. to 1 P.M.

1. Define a couple, and find the resultant of two given couples, 1st, when they act in the same plane, 2nd, when they act in planes at right angles to each other.
2. A heavy uniform chain, of length l, the weight of which per unit of length is given (w), is suspended from two fixed points in the same horizontal line. If θ be the inclination of the chain to the vertical at each point of support, find the tension at each of those points.

   Prove that there must be some length of the chain, for which the tension at each point of support will be a minimum.
3. If c be the length of chain, the weight of which is equal to the tension at the lowest point A of a catenary, and if s be the length of an arc AP, and φ the angle between the tangents at A and P, prove that $s=c\tan\varphi$, and that—

$$\text{tension at P} : \text{tension at A} :: 1 : \cos\varphi.$$

4. State the Laws of Friction.

   The books on a bookshelf are tightly wedged in at a given pressure. What is the force required to move one of the books, and the work done in pulling it out?

   Describe any machinery, such as Weston's coupling, by means of which the amount of frictional reaction may be increased indefinitely without increase of pressure.
5. Find the centres of gravity of the area of a parabola bounded by a double ordinate, and of the volume of a paraboloid of revolution bounded by a plane perpendicular to its axis.

   If the paraboloid of revolution be at rest with its vertex on a horizontal plane, prove that the equilibrium will be stable if the height of the paraboloid be less than three-fourths of its latus rectum.
6. A number of equal perfectly elastic balls are lying on a smooth horizontal plane with their centres in a straight line, the consecutive balls being very nearly in contact. Another equal perfectly elastic ball moves in the line of centres and impinges directly upon one end of the row. Prove that the impinging ball will be reduced to rest, that the intermediate balls will remain at rest, and that the ball at the other end of the row will move off with the velocity of the impinging ball.

INDIAN PUBLIC WORKS AND TELEGRAPH DEPARTMENTS, 1878.

7. If a body be in motion under the action of a force directed to a fixed point, prove that its radius vector, drawn from the point, will sweep out equal areas in equal times.

If the body move in a circle under the action of a force to a point A in the circumference, compare the times of moving from the end B of the diameter AB through the quadrant BC, and through the quadrant CA.

8. If a point move in a circle of radius r with constant velocity v, prove that the acceleration of the point, in direction of the centre of the circle, is equal to $\frac{v^2}{r}$.

A particle of weight w is tied by a string of length l to a fixed point on a smooth horizontal plane, and is then projected along the plane so that it revolves in a circular orbit twice in a second round the point. Find the tension of the string.

Does the string do any work?

9. Prove that, in a liquid at rest, the pressure at any point in the same horizontal plane is the same, and is proportional to the depth.

What would be the pressure on a square foot at the bottom of a lake 50 feet in depth, the weight of a cubic foot of water being 1000 oz., and the atmospheric pressure $14\frac{1}{2}$ lbs. on a square inch?

10. Distinguish between whole pressure and resultant pressure.

A hollow cone, with its vertex downwards, is filled with liquid. Find the whole pressure and the resultant pressure on its surface. If the top be closed, and the cone be held with its axis horizontal, find the resultant horizontal pressure on the curved surface.

11. A rectangle is immersed in water with its plane vertical, and one edge in the surface. Find its centre of pressure.

A cubical vessel, standing on a horizontal plane, has one of its vertical sides moveable about the base, and is kept closed by a string joining the middle point of the top edge of the moveable side to the middle point of the top edge of the opposite side. Find the tension of the string when the vessel is filled with water.

12. Define the metacentre and the curve of buoyancy of a ship, and explain how the stability of the ship depends upon the position of the metacentre.

Show that the metacentre is the centre of curvature at the lowest point of the curve of buoyancy.

Prove that a pontoon in the shape of a semi-cylinder with vertical ends is necessarily stable.

Explain the danger of deck-loading in a ship.

LATIN PROSE.

Wednesday, 24th July 1878. 2 P.M. to 5 P.M.

Translate into English:

Erat igitur in luctu senatus: squalebat civitas, publico consilio mutata veste: nullum erat Italiæ municipium, nulla colonia, nulla præfectura, nulla Romæ societas vectigalium, nullum collegium aut concilium aut omnino aliquod commune consilium, quod tum non honorificentissime decrevisset de mea salute: quum subito edicunt duo

consules, ut ad suum vestitum senatores redirent. Quis umquam consul senatum ipsius decretis parere prohibuit? quis tyrannus miseros lugere vetuit? Parumne est, Piso, ut omittam Gabinium, quod tantum homines fefellisti, ut negligeres auctoritatem senatus? optimi cujusque consilia contemneres? rempublicam proderes? consulare nomen affligeres? Etiamne edicere audebas, ne mærerent homines meam, suam, reipublicæ calamitatem? neve hunc suum dolorem veste significarent? Sive illa vestis mutatio ad luctum ipsorum sive ad deprecandum valebat; quis umquam tam crudelis fuit, qui prohiberet quemquam aut sibi mærere aut ceteris supplicare? Quid? sua sponte homines in amicorum periculis vestitum mutare non solent? pro te ipso, Piso, nemone mutabit? ne isti quidem, quos legatos non modo nullo senatusconsulto, sed etiam repugnante senatu, tute tibi legasti? Ergo hominis desperati et proditoris reipublicæ casum lugebunt fortasse, qui volent: civis florentissimi benevolentia bonorum, et optime de salute patriæ meriti, periculum, conjunctum cum periculo civitatis, lugere senatui non licebit?

CICERO.

Concionanti (prodigiosum dictu) tantum fœdarum volucrum supervolitavit, ut nube atra diem obtenderent. Accessit dirum omen, profugus altaribus taurus, disjecto sacrificii adparatu, longe, nec ubi feriri hostias mos est, confossus. Sed præcipuum ipse Vitellius ostentum erat, ignarus militiæ, inprovidus consilii, quis ordo agminis, quæ cura explorandi, quantus urgendo trahendove bello modus, alios rogitans, et ad omnes nuntios vultu quoque et incessu trepidus, dein temulentus. Postremo tædio castrorum, et audita defectione Misenensis classis, Romam revertit, recentissimum quodque vulnus pavens, summi discriminis incuriosus. Nam cum transgredi Apenninum, integro exercitus sui robore, et fessos hieme atque inopia hostes adgredi, in aperto foret; dum dispergit vires, acerrimum militem et usque in extrema obstinatum trucidandum capiendumque tradidit, peritissimis centurionum dissentientibus et, si consulerentur, vera dicturis. Arcuere eos intimi amicorum Vitellii, ita formatis principis auribus, ut aspere, quæ utilia, nec quidquam, nisi jucundum et læsurum, acciperet.

TACITUS.

Translate into Latin:

There never was any man, as far as we have ever heard, who was better able to expose a pretender to knowledge than Simmias. This has been proved by many examples. I will state one event which happened when he came here to visit Epameinondas, after Thebes had recovered her liberty, and had expelled the Lacedæmonian garrison. He was at a supper party, and, when the dishes were cleared away, we began to converse on many subjects. Among the guests was a man who had given all his time to devising instruments of war, with which, as he asserted, it was easy to destroy any army and to capture any city, implying that he was, by the possession of this skill, a greater general than Epameinondas. It seems then, said Simmias, you consider knowledge and courage to be the same thing. I do, said the mechanician, for if men are certain of the means of victory, they are certain of victory itself. I suppose then, said Simmias, that you greatly assisted the Thebans at the battle of Leuctra, when they defeated that army which had never been defeated in a pitched battle before. I did not, replied the other, for I did not think that the Thebans were in a position to enter into battle at all with any reasonable hope of success.

INDIAN PUBLIC WORKS AND TELEGRAPH DEPARTMENTS, 1878.

Knowledge then, said Simmias, may produce cowardice as well as courage. Do you not see that the courage on which the Theban general reckoned justly, contains much more than mere knowledge, and that it needs great wisdom to make a great general? It is no doubt something to know the use of arms, but it is much more to know how to use brave men, to inspire them with confidence.

LATIN VERSE.

Friday, 26th July 1878. 2 P.M. to 5 P.M.

Translate into English:

At varios linguæ sonitus natura subegit
Mittere, et utilitas expressit nomina rerum:
Non alia longe ratione, atque ipsa videtur
Protrahere ad gestum pueros infantia linguæ;
Quum facit, ut digito, quæ sint præsentia, monstrent.
Sentit enim vim quisque suam, quam possit abuti,
  Postremo, quid in hac mirabile tantopere est re,
Si genus humanum, cui vox et lingua vigeret,
Pro vario sensu varias res voce notaret;
Quum pecudes mutæ, quum denique sæcla ferarum
Dissimiles soleant voces variasque ciere,
Quum metus, aut dolor est, et quum jam gaudia gliscunt?
Quippe etenim licet in rebus cognoscere apertis.
  Irritata canum quum primum magna Molossûm
Mollia ricta fremunt, duros nudantia dentes,
Longe alio sonitu rabie distracta minantur;
Et quum jam latrant, et vocibus omnia complent.
At catulos blande quum lingua lambere tentant,
Aut ubi eos lactant pedibus, morsuque petentes
Suspensis teneris imitantur dentibus haustus,
Longe alio pacto gannitu vocis adulant;
Et quum deserti baubantur in ædibus, aut quum
Plorantes fugiunt submisso corpore plagas.

LUCRETIUS.

At tibi, calcasti qui me, violente, jacentem,
  Quamlibet et misero debitus hostis ero.
Desinet esse prius contrarius ignibus humor;
  Junctaque cum luna lumina solis erunt;
Parsque eadem cœli Zephyros emittet et Euros,
  Et tepidus gelido flabit ab axe Notus;
Et ver autumno, brumæ miscebitur æstas;
  Atque eadem regio vesper et ortus erunt:
Quam mihi sit tecum, positis quæ sumsímus armis,
  Gratia, commissis, improbe, rupta tuis;
Quam dolor hic unquam spatio evanescere possit,
  Leniat aut odium tempus et hora meum.
Pax erit hæc nobis, donec mihi vita manebit,
  Cum pecore infirmo quæ solet esse lupis.
Prima quidem cœpto committam prœlia versu:
  Non soleant quamvis hoc pede bella geri.

Utque petit primo plenum flaventis arenæ
  Nondum calfacti velitis hasta solum :
Sic ego te ferro nondum jaculabor acuto,
  Protinus invisum nec petet hasta caput.
Et neque nomen in hoc, nec dicam facta libello:
  Teque brevi, qui sis, dissimulare sinam.
Postmodo, si perges, in te mihi liber iambus
  Tincta Lycambeo sanguine tela dabit,

OVID.

Those who write no Latin Verse may translate into English the following passage of Terence :—

[DEMIPHO, father of Antipho.
GETA, slave of Demipho, left in charge of Antipho.
PHÆDRIA, cousin and friend of Antipho.

Phædria and Geta are standing apart unseen by Demipho.]

PH. Geta, quid nunc fiet? GE. Tu jam litis audies :
Ego plectar pendens, nisi quid me fefellerit.
Sed quod modo hic nos Antiphonem monuimus,
Id nosmet ipsos facere oportet, Phædria.
PH. Aufer mi oportet, quin tu quid faciam inpera.
GE. Meministin, olim ut fuerit vostra oratio
In re incipiunda ad defendendam noxiam,
Justam illam causam, facilem, vincibilem, optumam ?
PH. Memini. GE. Em, nunc ipsast opus ea, aut, siquid potest,
Meliore et callidiore. PH. Fiet sedulo.
GE. Nunc prior adito tu, ego in insidiis hic ero
Subcenturiatus, siquid deficias. PH. Age.
DE. Itane tandem uxorem duxit Antipho injussu meo ?
Nec meum imperium : ac mitto imperium : non simultatem meam
Revereri saltem ! non pudere ! o facinus audax, o Geta
Monitor ! GE. Vix tandem. DE. Quid mihi dicent aut quam causam reperient ?
Demiror. PH. Atqui reperiam : aliud cura. DE. An hoc dicet mihi :
Invitus feci, lex coegit ? audio, fateor. GE. Places.
DE. Verum scientem, tacitum causam tradere advorsariis,
Etiamne id lex coegit ? PH. Illud durum. GE. Ego expediam : sine.
DE. Incertumst quid agam, quia præter spem atque incredibile hoc mi obtigit :
Ita sum inritatus, animum ut nequeam ad cogitandum instituere.
Quamobrem omnis, quom secundæ res sunt maxume, tum maxume.
Meditari secum oportet, quo pacto advorsam ærumnam ferant.
Pericla, damna peregre rediens semper secum cogitet,
Aut fili peccatum aut uxoris mortem aut morbum filiæ,
Communia esse hæc, nequid horum umquam accidat animo novom :
Quidquid præter spem eveniat, omne id deputare esse in lucro.

TERENCE.

INDIAN PUBLIC WORKS AND TELEGRAPH DEPARTMENTS, 1878.

Translate into Latin Elegaics:

The mellow year is hasting to its close,
The little birds have almost sung their last,
Their small notes twitter in the dreary blast
—That shrill-piped harbinger of early snows—.
The patient beauty of the scentless rose,
Oft with the morn's hoar crystal quaintly glassed,
Hangs a pale mourner for the summer past,
And makes a little summer where it grows:
In the chill sunbeam of the faint brief day
The dusky waters shudder as they shine,
The russet leaves obstruct the struggling way
Of oozy brooks which no deep banks define,
And the gaunt woods in ragged scant array,
Wrap their old limbs with sombre ivy twine.

Or,

Translate into Hexameters:

These are they blessings, Industry! rough power
Whom labour still attends, and sweat, and pain,
Yet the kind source of every gentle art,
And all the soft civility of life:
Raiser of humankind! by nature cast,
Naked, and helpless, out amid the woods
And wilds, to rude inclement elements,
With various seeds of art deep in the mind
Implanted, and profusely pour'd around
Materials infinite; but idle all.
Still unexerted, in th'unconscious breast,
Slept the lethargic powers; corruption still,
Voracious, swallow'd what the liberal hand
Of bounty scatter'd o'er the savage year:
And still the sad barbarian, roving, mix'd
With beasts of prey; or for his acorn-meal
Fought the fierce tusky boar.

GREEK PROSE.

Tuesday, 30th July 1878. 10 A.M. to 1 P.M.

Translate into English:

Τῆς δὲ νυκτὸς τῷ Νικίᾳ καὶ Δημοσθένει ἐδόκει, ἐπειδὴ κακῶς σφίσι τὸ στράτευμα εἶχε τῶν ἐπιτηδείων πάντων ἀπορίᾳ ἤδη, καὶ κατατετραυματισμένοι ἦσαν πολλοὶ ἐν πολλαῖς προσβολαῖς τῶν πολεμίων γεγενημέναις, πυρὰ καύσαντες ὡς πλεῖστα ἀπάγειν τὴν στρατιάν, μηκέτι τὴν αὐτὴν ὁδὸν ᾗ διενοήθησαν, ἀλλὰ τοὐναντίον ἢ οἱ Συρακόσιοι ἐτήρουν, πρὸς τὴν θάλασσαν. ἦν δὲ ἡ ξύμπασα ὁδὸς αὕτη οὐκ ἐπὶ Κατάνης τῷ στρατεύματι, ἀλλὰ κατὰ τὸ ἕτερον μέρος τῆς Σικελίας, τὸ πρὸς Καμάριναν καὶ Γέλαν καὶ τὰς ταύτῃ πόλεις καὶ Ἑλληνίδας καὶ βαρβάρους. καύσαντες οὖν πυρὰ πολλὰ ἐχώρουν ἐν τῇ νυκτί. καὶ αὐτοῖς, οἷον φιλεῖ καὶ πᾶσι στρατοπέδοις, μάλιστα δὲ τοῖς μεγίστοις, φόβοι καὶ δείματα ἐγγίγνεσ-

θαι, ἄλλως τε καὶ ἐν νυκτί τε καὶ διὰ πολεμίας καὶ ἀπὸ πολεμίων οὐ πολὺ ἀπεχόντων ἰοῦσιν, ἐμπίπτει ταραχή· καὶ τὸ μὲν Νικίου στράτευμα, ὥσπερ ἡγεῖτο, ξυνέμενέ τε καὶ προὔλαβε πολλῷ, τὸ δὲ Δημοσθένους, τὸ ἥμισυ μάλιστα καὶ πλέον, ἀπεσπάσθη τε καὶ ἀτακτότερον ἐχώρει. ἅμα δὲ τῇ ἕῳ ἀφικνοῦνται ὅμως πρὸς τὴν θάλασσαν, καὶ ἐσβάντες ἐς τὴν ὁδὸν τὴν Ἑλωρινὴν καλουμένην ἐπορεύοντο, ὅπως, ἐπειδὴ γένοιντο ἐπὶ τῷ ποταμῷ τῷ Κακιπάρει, παρὰ τὸν ποταμὸν ἴοιεν ἄνω διὰ μεσογείας· ἤλπιζον γὰρ καὶ τοὺς Σικελοὺς ταύτῃ, οὓς μετεπέμψαντο, ἀπαντήσεσθαι. ἐπεὶ δ' ἐγένοντο ἐπὶ τῷ ποταμῷ, εὗρον καὶ ἐνταῦθα φυλακήν τινα τῶν Συρακοσίων, ἀποτειχίζουσάν τε καὶ ἀποσταυροῦσαν τὸν πόρον. καὶ βιασάμενοι αὐτὴν διέβησάν τε τὸν ποταμὸν, καὶ ἐχώρουν αὖθις πρὸς ἄλλον ποταμὸν τὸν Ἐριγεόν· ταύτῃ γὰρ οἱ ἡγεμόνες ἐκέλευον.

THUCYDIDES.

Ὦ ἄνδρες Λακεδαιμόνιοί τε καὶ σύμμαχοι, οἰόμεθα λανθάνειν ὑμᾶς πρᾶγμα φυόμενον ἐν τῇ Ἑλλάδι. ὅτι μὲν γὰρ τῶν ἐπὶ Θρᾴκης μεγίστη πόλις Ὄλυνθος, σχεδὸν πάντες ἐπίστασθε. οὗτοι τῶν πόλεων προσηγάγοντο ἔστιν ἃς, ἐφ' ᾧτε νόμοις τοῖς αὐτοῖς χρῆσθαι καὶ συμπολιτεύειν· ἔπειτα δὲ καὶ τῶν μειζόνων προσέλαβόν τινας. ἐκ δὲ τούτου ἐπεχείρησαν καὶ τὰς τῆς Μακεδονίας πόλεις ἐλευθεροῦν ἀπὸ Ἀμύντου τοῦ Μακεδόνων βασιλέως. Ἐπεὶ δὲ εἰσήκουσαν αἱ ἐγγύτατα αὐτῶν, ταχὺ καὶ ἐπὶ τὰς πόῤῥω καὶ μείζους ἐπορεύοντο· καὶ κατελίπομεν ἡμεῖς ἔχοντας ἤδη ἄλλας τε πολλάς, καὶ Πέλλαν, ἥπερ μεγίστη τῶν ἐν Μακεδονίᾳ πόλεων· καὶ Ἀμύνταν δὲ ᾐσθανόμεθα ἀποχωροῦντά τε ἐκ τῶν πόλεων, καὶ ὅσον οὐκ ἐκπεπτωκότα ἤδη ἐκ πάσης Μακεδονίας. πέμψαντες δὲ καὶ πρὸς ἡμᾶς καὶ πρὸς Ἀπολλωνιάτας οἱ Ὀλύνθιοι, προεῖπον ἡμῖν, ὅτι, εἰ μὴ παρεσόμεθα συστρατευσόμενοι, ἐκεῖνοι ἐφ' ἡμᾶς ἴοιεν. ἡμεῖς, δέ, ὦ ἄνδρες Λακεδαιμόνιοι, βουλόμεθα μὲν τοῖς πατρίοις νόμοις χρῆσθαι καὶ αὐτοπολῖται εἶναι. εἰ μέντοι μὴ βοηθήσει τις, ἀνάγκη καὶ ἡμῖν μετ' ἐκείνων γίγνεσθαι. Ἐννοήσατε δὲ καὶ τόδε, πῶς εἰκός, ὑμᾶς τῆς μὲν Βοιωτίας ἐπιμεληθῆναι, ὅπως μὴ καθ' ἓν εἴη, πολὺ δὲ μείζονος ἀθροιζομένης δυνάμεως ἀμελῆσαι, καὶ ταύτης οὐ κατὰ γῆν μόνον, ἀλλὰ καὶ κατὰ θάλατταν ἰσχυρᾶς γιγνομένης. τί γὰρ δὴ καὶ ἐμποδών, ὅπου ξύλα μὲν ναυπηγήσιμα ἐν αὐτῇ τῇ χώρᾳ ἐστί, χρημάτων δὲ πρόσοδοι ἐκ πολλῶν μὲν λιμένων, πολλῶν δὲ ἐμπορίων, πολυανθρωπία γε μὴν διὰ τὴν πολυσιτίαν ὑπάρχει;

XENOPHON.

INDIAN PUBLIC WORKS AND TELEGRAPH DEPARTMENTS, 1878.

Translate into Greek:

The Lydian empire . . . . was the gre
the Greeks had yet known, otherwise t
rumour. The fame of Crœsus resou
streams of Lydia were believed to roll c
of the mountains to be filled with silve
was large, his hand was open: he loved t
them at his court: respected their ora
magnificent offerings, and was disposed
their leading states. The Lacedæmoni
image of a god, and sent to Sardis to pu
all they required. The Athenian Alcmæ
envoys at Delphi: Crœsus invited him to his capital, and permitted him to take as much gold dust as he was able to carry out of the royal treasury: smiled at the artifice by which he contrived to make the precious burden as heavy as possible, and rewarded his ingenuity by doubling the present.

THIRLWALL.

GREEK VERSE.

Tuesday, 30th July 1878. 2 P.M. to 5 P.M.

Translate into English:

Ὡς ἄρα τοί γ' ἐλεεινὸν ὑπ' ὀφρύσι δάκρυον εἶβον.
Καί νύ κ' ὀδυρομένοισιν ἔδυ φάος ἠελίοιο,
Εἰ μὴ Τηλέμαχος προσεφώνεεν ὃν πατέρ' αἶψα·
"Ποίῃ γὰρ νῦν δεῦρο, πάτερ φίλε, νηΐ σε ναῦται
Ἤγαγον εἰς Ἰθάκην; τίνες ἔμμεναι εὐχετόωντο;
Οὐ μὲν γάρ τί σε πεζὸν ὀΐομαι ἐνθάδ' ἱκέσθαι."
Τὸν δ' αὖτε προσέειπε πολύτλας δῖος Ὀδυσσεύς·
"Τοιγὰρ ἐγώ τοι, τέκνον, ἀληθείην καταλέξω.
Φαίηκές μ' ἄγαγον ναυσίκλυτοι, οἵ τε καὶ ἄλλους
Ἀνθρώπους πέμπουσιν, ὅ τίς σφεας εἰσαφίκηται·
Καί μ' εὗδοντ' ἐν νηῒ θοῇ ἐπὶ πόντον ἄγοντες
Κάτθεσαν εἰς Ἰθάκην, ἔπορον δέ μοι ἀγλαὰ δῶρα,
Χαλκόν τε χρυσόν τε ἅλις ἐσθῆτά θ' ὑφαντήν.
Καὶ τὰ μὲν ἐν σπήεσσι θεῶν ἰότητι κέονται·
Νῦν αὖ δεῦρ' ἰκόμην ὑποθημοσύνῃσιν Ἀθήνης,
Ὄφρα κε δυσμενέεσσι φόνου πέρι βουλεύσωμεν.
Ἀλλ' ἄγε μοι μνηστῆρας ἀριθμήσας κατάλεξον,
Ὅφρα ἰδέω ὅσσοι τε καὶ οἵ τινες ἀνέρες εἰσίν·
Καί κεν ἐμὸν κατὰ θυμὸν ἀμύμονα μερμηρίξας
Φράσσομαι, ἦ κεν νῶϊ δυνησόμεθ' ἀντιφέρεσθαι
Μούνω ἄνευθ' ἄλλων, ἦ καὶ διζησόμεθ' ἄλλους."

HOMER.

Παῖ τῆς μελῳδοῦ μητέρος, Μουσῶν μιᾶς,
Θρῃκός τε ποταμοῦ Στρυμόνος, φιλῶ λέγειν
Τἀληθὲς ἀεὶ κοὐ διπλοῦς πέφυκ' ἀνήρ.
Πάλαι πάλαι χρῆν τῇδε συγκάμνειν χθονί
Ἐλθόντα, καὶ μὴ τοὐπὶ σ' Ἀργείων ὕπο
Τροίαν ἑᾶσαι πολεμίων πεσεῖν δορί.
Οὐ γάρ τι λέξεις ὡς ἄκλητος ὢν φίλοις
Οὐκ ἦλθες οὐδ ἤμυνας οὐδ' ἐπεστράφης.
Τίς γάρ σε κῆρυξ ἢ γερουσία Φρυγῶν
Ἐλθοῦσ' ἀμύνειν οὐκ ἐπέσκηψεν πόλει;
Ποίων δὲ δώρων κόσμον οὐκ ἐπέμψαμεν;
Σὺ δ' ἐγγενὴς ὢν βάρβαρός τε βαρβάρους
Ἕλλησιν ἡμᾶς προὔπιες τὸ σὸν μέρος.
Καίτοι σε μικρᾶς ἐκ τυραννίδος μέγαν
Θρῃκῶν ἄνακτα τῇδ' ἔθηκ' ἐγὼ χερὶ,
Ὅτ' ἀμφὶ Πάγγαιόν τε Παιόνων τε γῆν
Θρῃκῶν ἀρίστοις ἐμπεσὼν κατὰ στόμα,
Ἔρρηξα πέλτην, σοὶ δὲ δουλώσας λεὼν
Παρέσχον· ὧν σὺ λακτίσας πολλὴν χάριν,
Φίλων νοσούντων ὕστερος βοηδρομεῖς.
Ταῦθ', ὡς ἂν εἰδῇς Ἕκτορ' ὄντ' ἐλεύθερον,
Καὶ μέμφομαί σοι καὶ λέγω κατ' ὄμμα σόν.

EURIPIDES.

Translate into Greek Iambics:

This too is well. The fix'd and noble mind
Turns all occurrence to its own advantage,
And I'll make vengeance of calamity.
Were I not thus reduced, thou would'st not know,
That, thus reduced, I dare defy thee still:
Torture thou may'st; but thou shalt ne'er despise me:
The blood will follow where the knife is driven;
The flesh will quiver, where the pincers tear;
And sighs and groans by nature grow on pain:
But these are foreign to the soul: not mine
The groans that issue, or the tears that fall;
They disobey me; on the rack I scorn thee,
As when my fauchion clove thy helm in battle.
. . . While I live, old man, I'll speak;
And well I know, thou dar'st not kill me yet;
For that would rob thy bloodhounds of their prey.

YOUNG.

INDIAN PUBLIC WORKS AND TELEGRAPH DEPARTMENTS, 1878.

Or, as an alternative for the Iambics.

Translate into English:

Οἵ μοί μοι· καί που πολιᾶς
Πόντου θινὸς ἐφήμενος,
Γελᾷ μου, χερὶ πάλλων
Τὰν ἐμὰν μελέου τροφάν,
Τὰν οὐδείς ποτ' ἐβάστασεν.
Ὦ τόξον φίλον, ὦ φίλων
Χειρῶν ἐκβεβιασμένον,
Ἦ που ἐλεινὸν ὁρᾷς, φρένας εἴ τινας
Ἴσχεις, τὸν Ἡράκλειον
Ξύννομον ὧδέ σοι
Οὐκ ἔτι χρησόμενον τὸ μεθύστερον·
Ἀλλ' ἐν μεταλλαγᾷ
Πολυμηχάνου ἀνδρὸς ἐρέσσει,
Ὁρῶν μὲν αἰσχρὰς ἀπάτας,
Στυγνὸν δὲ φῶτ' ἐχθοδοπὸν
Μυρί' ἀπ' αἰσχρῶν ἀνατέλλονθ', ὅσ' ἐφ' ἡ-
μῖν κάκ' ἐμήσατ', ὦ Ζεῦ.
Ὦ πταναὶ θῆραι, χαροπῶν τ'
Ἔθνη θηρῶν, οὓς ὅδ' ἔχει
Χῶρος οὐρεσιβώτας,
Φυγᾷ μ' οὐκ ἔτ' ἀπ' αὐλίων
Πελᾶτ'. οὐ γὰρ ἔχω χεροῖν
Τὰν πρόσθεν βελέων ἀλκάν,
Ὦ δύστανος ἐγὼ τανῦν.
Ἀλλ' ἀνέδην ὅδε χῶρος ἐρύκεται,
Οὐκ ἔτι φοβητὸς ὑμῖν.
Ἕρπετε, νῦν καλὸν
Ἀντίφονον κορέσαι στόμα πρὸς χάριν
Ἐμᾶς σαρκὸς αἰόλας.
Ἀπὸ γὰρ βίον αὐτίκα λείψω.
Πόθεν γὰρ ἔσται βιοτά;
Τίς ὧδ' ἐν αὔραις τρέφεται,
Μηκέτι μηδενὸς κρατύνων, ὅσα πεμ-
πει βιόδωρος αἶα;

SOPHOCLES.

FRENCH.

Friday, 26th July 1878. 10 A.M. to 1 P.M.

(Including Dictation.)

INDIAN PUBLIC WORKS AND TELEGRAPH DEPARTMENTS, 1878.

Translate into English:

Mais c'est à la Bourse que le spéculateur passe la plus belle partie de sa journée. C'est là qu'il vit avec le plus d'intensité et de délices, sauf les moments où il compte, palpe et contemple ses valeurs. La Bourse est son temple, son église, la maison de son dieu. Chaque jour il vient l'y adorer et sacrifier sur son autel, pour attirer ses grâces et ses bénédictions; c'est-à-dire que tous les jours il achète ou vend quelque chose, dans l'espoir de faire un bénéfice, si mince qu'il soit; " car, se dit-il, les gouttes d'eau font les ruisseaux; les ruisseaux, les " rivières et les fleuves qui remplissent l'océan." Il n'y a point de petit gain qui ne forme une grosse somme, quand il se répète souvent. Il est vrai qu'il n'éprouve pas toujours la faveur de sa divinité, qui parfois est sourde à ses prières ou cruelle dans ses vengeances. Car il y a dans les affaires de mauvaises chances, ou des spéculations maladroites et de faux calculs qui balayent soudainement la place, emportant d'un seul coup le gain amassé longuement et à grand' peine. Ce sont des jours néfastes, où il semble que le monde va s'abîmer avec le capital perdu. C'est une partie de son âme, le plus pur de son existence, qui lui a été enlevé, et il en portera le deuil au fond de son cœur et dans toute sa personne, jusqu'à ce qu'un retour de fortune vienne lui rendre ce qui lui a été ravi. Encore ne s'en consolera-t-il jamais; car il se dira qu'il aurait pu gagner ce qui lui a été rendu, sans perdre ce qu'il regrette.

L'ABBÉ BAUTAIN.

Je l'ai connue en un temps plus prospère,
Et sa maison touchait à celle de mon père.
Elle avait tous les biens que Dieu donne ou permet.
On l'avait mariée à l'homme qu'elle aimait;
Elle eut un fils; ce fut une ineffable joie.
Ce premier-né couchait dans un berceau de soie;
Sa mère l'allaitait; il faisait un doux bruit
A côté du chevet nuptial, et la nuit
La mère ouvrait son âme aux chimères sans nombre.
Pauvre mère, ses yeux resplendissaient dans l'ombre
Quand, sans souffle, sans voix, renonçant au sommeil,
Penchée, elle écoutait dormir l'enfant vermeil.
Dès l'aube elle chantait ravie et toute fière.
Elle se renversait sur sa chaise en arrière,
Et souriait au faible enfant et l'appelait
Ange, trésor, amour, et mille folles choses.
Oh! comme elle baisait ces beaux petits pieds roses.
Comme elle leur parlait: l'enfant charmant et nu
Riait, et par ses mains, sous les bras soutenu,
Joyeux, de ses genoux montait jusqu'à la bouche,
Tremblant comme le daim qu'une feuille effarouche.

VICTOR HUGO.

INDIAN PUBLIC WORKS AND TELEGRAPH DEPARTMENTS, 1878.

Translate into French:

The French had posted sentries along shore to challenge boats and vessels and give the alarm occasionally. The first boat that contained the English troops being questioned accordingly, a captain of Fraser's regiment, who had served in Holland, and who was perfectly well acquainted with the French language and customs, answered without hesitation to *qui vive*, which is their challenging word, *France:* nor was he at a loss to answer the second question, which was more particular and difficult. When the sentinel demanded, *quel régiment?* the captain replied, *de la Reine*, which he knew by accident to be one of those that composed the body commanded by Bougainville. The soldier took it for granted this was the expected convoy, and saying *passe*, allowed all the boats to proceed without further question. In the same manner the other sentries were deceived, though one more wary than the rest, came running down to the water's edge, and called "*Pourquoi ne parlez-vous pas plus haut?*" To this interrogation, which implied doubt, the captain answered with admirable presence of mind, in a soft tone of voice: "*Tais-toi! nous serons entendus.*" Thus cautioned, the sentry retired without further altercation.

SMOLLETT.

DICTATION.

L'aventurier tourna tout autour comme un loup affamé autour d'un parc, et, appliquant son œil à l'une des ouvertures, vit des choses qui le décidèrent apparemment, car, sans hésiter, il poussa la porte chauntante, que ne fermait pas même un faible loquet. La cage entière s'ébranla au coup de poing qu'il avait donné; il vit alors qu'elle était divisée en deux cellules par une cloison. Un grand flambeau de cire jaune éclairait la première; là, une jeune fille, pâle et d'un effroyable maigreur, était accroupie dans un coin sur la terre humide où coulait la neige fondue sous les planches de la chaumière. Des cheveux noirs, mêlés et couverts de poussière, mais très-longs, tombaient en désordre sur son vêtement de bure brune; un capuchon rouge lui couvrait la tête et les épaules; elle baissait les yeux et filait une petite quenouille attachée à sa ceinture. L'entrée d'un homme ne la troubla pas.

GERMAN.

Monday, 29th July 1878. 2 P.M. to 5 P.M.

(Including Dictation.)

Translate into English:

Wenn Ravenna keine andre Zierde beſäße als die ihm die Verſe auf der Gruft Dante's verleihen, und keinen andern Ruhm als den, dieſem Dichter das letzte Aſyl dargeboten zu haben, ſo wäre das hinreichend genug, die Stadt für alle Zeiten dem Dunkel zu entreißen. Es war um das Jahr 1320, als Dante von Verona nach Ravenna ging, heimathlos und in bitterſter Armuth. „Damals," ſo erzählt Boccaccio, „war Herr über Ravenna ein edler Ritter mit Namen Guido Novello da Polenta. Dieſer war in den liberalen Wiſſenſchaften wohl unterrichtet, ehrte die tüchtigen Männer hoch, und vor allem diejenigen welche durch Kenntniſſe andre überragten. Als er hörte, daß Dante, von deſſen Ruf er lange vorher vernommen

hatte, sich ohne alle Aussichten in der Romagna befinde, so entschloß er sich, ihn in diesem verzweifelten Zustande aufzunehmen, ohne von ihm darum angegangen zu sein. Dante wohnte also in Ravenna, nachdem er jede Hoffnung der Rückkehr nach Florenz verloren hatte, einige Zeit unter dem Schutze Polenta's; hier bildete er mehrere Schüler in der Dichtkunst, zumal in der lingua volgare, die er, nach meiner Meinung, zuerst unter den Italiänern zu dem Range erhoben hatte, welchen Homer unter den Griechen und Virgil unter den Latinern ihren Muttersprachen gegeben haben." Das Grabmal Dante's ist stets verschlossen. Der Graf Alessandro Cappi, welcher mich in das Mausoleum führte, hatte hier in früher Jugend noch Lord Byron gesehen, in jener Epoche seines Lebens als er die Gräfin Guiccioli liebte. Der Lord, so sagte mein Führer, ging niemals, auch nicht in der Entfernung, an dem Grabmal vorüber, ohne ehrfurchtsvoll sein Haupt zu entblößen.

Baron Thugut war von niederer Herkunft, der Sohn eines Donauschiffers. Frühzeitig wegen seiner Geistesanlagen bemerkt, war er von seinen Lehrern, den Wiener Jesuiten, dem Ministerium empfohlen worden und dann rasch im diplomatischen Dienst emporgekommen. Er bewährte überall Scharfsinn und Muth, Talent für die Intrigue und Verachtung für die Gefahr; überall hatte er nur seinen Zweck im Auge, ohne sich durch Furcht oder Genuß oder Gewissen aufhalten zu lassen. In Constantinopel sah man ihn gleich unerschrocken bei einem tobenden Volksaufstande in den Straßen, wie bei einer stürmischen Nacht auf dem Bosphorus. In Warschau steuerte er, bald schmiegsam, bald energisch, und stets mit zutreffendem Takte, zwischen dem käuflichen Adel, dem ohnmächtigen Könige und dem Uebermuth des russischen Gesandten hindurch. Endlich sah er den alten Hof von Versailles im letzten Aufleuchten seines Glanzes und brachte über die Revolution die Ansicht zurück: daß ein Haufe von Spitzuben den Thron nicht umgeworfen hätte, wären nicht die verlebten Herren des alten Regime zu schwach zum Dreinschlagen gewesen. Ihn selbst sah man in jeder Lage verschlossen und gleichmüthig; wie es schien, einer jeden Schwäche unzugänglich, frugal, nüchtern und fast ohne Bedürfnisse; sein regelmäßiges Abendessen war etwas Obst und ein Glas Wasser.

INDIAN PUBLIC WORKS AND TELEGRAPH DEPARTMENTS, 1878.

Translate into German:

Public carriages had recently been much improved. During the years which immediately followed the Restoration, a diligence ran between London and Oxford in two days. The passengers slept at Beaconsfield. At length, in the spring of 1669, a great and daring innovation was attempted. It was announced that a vehicle, described as the Flying Coach, would perform the whole journey between sunrise and sunset. This spirited undertaking was solemnly considered and sanctioned by the Heads of the University, and appears to have excited the same sort of interest which is excited in our own time by the opening of a new railway. The Vice-Chancellor, by a notice affixed in all public places, prescribed the hour and place of departure. The success of the experiment was complete. At six in the morning the carriage began to move from before the ancient front of All Souls College; and at seven in the evening the adventurous gentlemen who had run the first risk were safely deposited at their inn in London. The emulation of the sister University was moved; and soon a diligence was set up which in one day carried passengers from Cambridge to the Capital.

DICTATION.

Friederich der Zweite war in vielen Dingen der Gegenſatz ſeines Vaters. Wenn dieſer ſeinen wilden Jägden nachging, oder mit ſeiner Umgebung eine rohe Unterhaltung führte, beſchäftigte der talentvolle geiſtreiche Prinz ſich mit franzöſiſchen Schriftſtellern und mit dem Flötenſpiel, das er leidenſchaftlich liebte. Die Verſchiedenheit ihrer Natur entfremdete beide einander. Friederich nahm Anſtoß an des Vaters Tyrannei gegen ſeine Familie, an ſeinem barſchen Weſen, an ſeiner Härte gegen Dienſtboten und Soldaten. Eine unüberwindliche Abneigung faßte in ſeiner Seele Würzel, und da Friederich Wilhelm, erbittert daß ſein Sohn einen anderen Weg einſchlug, ihn durch ſtrenge Ausübung der väterlichen Gewalt von dieſer Richtung abbringen wollte, ſo nahm die Kälte und Abneigung mit den Jahren zu. Endlich, als der Vater aus Laune Friederich's beabſichtigte Vermählung mit einer engliſchen Prinzeſſin nicht geſtattete, faßte deiſer mit einigen jungen Freunden den Plan, nach England zu entfliehen. Eine Reiſe des Königs in die Rheingegenden ſchien eine günſtige Gelegenheit zu bieten, aber ein aufgefangener Brief Friederich's brachte das Geheimniß an den Tag.

CHEMISTRY.

Monday, 29th July 1878. 10 A.M. to 1 P.M.

1. Describe the physical characters of hydrogen; also its chief chemical characters, and illustrate them by examples of compounds which it forms. How do you account for the rapidity with which hydrogen escapes through very minute cracks?

INDIAN PUBLIC WORKS AND TELEGRAPH DEPARTMENTS, 1878.

2. How can you prepare sulphurous oxide from (1) sulphur, (2) sulphuretted hydrogen, (3) sulphuric acid, (4) sodium sulphate? By what tests could you detect sulphurous oxide if present in the air of a room?
3. Describe hydrochloric acid. Explain its action on iron, manganese, black oxide, caustic soda, mercuric oxide, and antimony sulphide, respectively.
4. Explain fully how to make a eudiometric analysis of marsh gas.
5. Give an outline of the preparation, and describe shortly the properties of iodine, hydriodic acid, potassium iodide, and potassium iodate.
6. Explain how it is inferred (1) from the vapour density of nitric acid, which is 4·35 times that of air, and (2) from the characters of nitrates, that nitric acid contains in each molecule only one atom of hydrogen; assuming that 63 parts of nitric acid contain 14 of N and 48 of O.
7. Show by what experimental facts, and by what reasoning upon them, the atomic weight of phosphorus has been determined.
8. Explain how iron is reduced in a blast furnace; and state what other elements are combined with the iron as it issues from such a furnace, and how they severally affect the characters of the metal.

HEAT AND LIGHT.

Monday, 22nd July 1878. 10 A.M. to 1 P.M.

1. Describe the construction of a simple form of photographic camera obscura; and explain the formation of the image on the ground glass. What advantages have lenses over a minute aperture in the side of the camera?
2. Three cubic metres of air at 10° saturated with moisture are mixed with five cubic metres of air at 18°, also saturated. Is any moisture precipitated, and if so, how much? Tension of aqueous vapour at 10°=9·2 mm.; at 15°=12·7 mm., and at 18°=15·4 mm. A litre of dry air at 0° and 760 mm. weighs 1·293 grammes.
3. Describe exactly the method of obtaining a pure solar spectrum; and give an account of the principal properties of the spectrum thus obtained.
4. Give two distinct methods of accurately determining the mechanical equivalent of heat.

   A lead bullet with a velocity, at the moment of impact, of 1,300 feet, strikes against a target. Assuming that the lead retains half the total amount of the heat produced, what would be the rise in temperature of the lead, the specific heat of lead being 0·0314?
5. State and explain the general formula for the relative distances of the image and the object with any particular lens. If the image of any object is to be produced on three quarters the scale, with a convex lens of 12 inches principal focus, what must be the relative distances of the image and of the object from the centre of the lens?
6. Describe a method of proving experimentally that when a given volume of air is enclosed at 0° and 760 mm., and is then heated to 100°, the pressure is doubled if the air be not allowed to expand.
7. State what you mean by "wave length." How can it be accurately measured for any particular colour?

INDIAN PUBLIC WORKS AND TELEGRAPH DEPARTMENTS, 1878.

8. Give a general account of the modern views of the constitution of gases.
9. Describe any method of determining the refractive index of a liquid when only a small quantity of the substance is available.
10. In what way may the relative powers of gases and vapours to transmit heat be determined? What conclusions may be drawn from the results which have been arrived at in reference to aqueous vapour?

ELECTRICITY AND MAGNETISM.

Tuesday, 23rd July 1878. 10 A.M. to 1 P.M.

1. Discuss the general nature of the action which heat exerts upon magnets and upon magnetic substances.
2. Explain the meaning of the expression "determination of terrestrial magnetism in absolute measure." How is this determination made?
3. By what arrangement may it be shown experimentally that the discharge of a Leyden jar induces a discharge in an adjacent conductor? How is the heating effect of the primitive discharge affected by the production of the induced one?
4. How may the diamagnetism of liquids be examined? What experiments justify the conclusion that diamagnetism is a polar force?
5. Describe an arrangement by which a voltaic current may be made movable; and show that such a movable current can be made to produce the ordinary effects of a magnet.
6. Describe and explain the method by which it is possible that telegraphic signals may be simultaneously transmitted on the same line in opposite directions.
7. Elucidate the meaning of the term "electrical capacity." Prove the relation which exists between the capacity of a spherical conductor and its radius. How is this capacity affected if the sphere be surrounded by a concentric metallic shell connected with earth?
8. A solution of cupric acetate is placed on a polished silver plate, and the point of a thin zinc rod is just made to touch the plate. Describe and explain the effects observed.
9. Describe the construction, and explain the action, of Holtz's machine.
10. A circuit consists of a battery, tangent galvanometer, and wires, whose resistances are respectively 12, 2, and 10; and the deflection of the needle is 45°. A length of wire whose resistance is 1 is removed from the circuit, and the galvanometer is shunted by its means. What is now the numerical value of the tangent of the angle of deflection?
11. You are required to show that purely mechanical actions can be applied to give rise to voltaic currents; the use of magnetism in any shape being excluded.

GEOLOGY AND PHYSICAL GEOGRAPHY.

Tuesday, 23rd July 1878. 2 P.M. to 5 P.M.

1. Describe the nature of the observations by means of which it has been demonstrated that the earth is not a perfect sphere.
2. State what you know about the contour of the bed of the Atlantic Ocean.

3. Explain the difference between a tidal wave and an ocean current.
4. Draw an outline map of South America, showing the positions of the principal mountain ranges and rivers.
5. What are "isobars," and to what causes are the continual changes of position of isobars due?
6. Describe the physical peculiarities of the Mongolian race, and state what portions of the globe are inhabited by people of this race.
7. In what respects do Anthracite, Common Coal, Cannel Coal, and Lignite differ from one another?
8. Draw a section showing horizontal strata of limestone and shale, with contemporaneous sheets of felstone interbedded, the whole being traversed by vertical dykes of basalt.
9. What are joints, and how have they been produced?
10. Describe the mode of formation of volcanic cinder-cones, and draw a section to illustrate their internal structure.
11. What are the principal divisions of the Cretaceous formation as exhibited in the British Islands? State the usual mineral characters, and some of the most common fossils found in each of these subdivisions.
12. What is a Brachiopod, and how does it differ from a Lamellibranch? What portions of the geological series are characterised by the abundance of Brachiopods and Lamellibranchs respectively?.

GEOMETRICAL DRAWING. (1.)

Monday, 22nd July 1878. 2 P.M. to 5 P.M.

[N.B.—*The constructions should be neat and accurate; they must be strictly geometrical, and particular care should be taken not to efface the lines necessary for the correct solutions. All lines should be inked in either with common or Indian ink.*]

1. Upon a base BC, 2 inches long, describe a triangle ABC having the side AC 1·75 inches and the angle ABC equal to 55°. Upon AB construct a square ABEF, and on AC construct a square ACGH. Join FH, and reduce the whole figure FEBCGH to a triangle of equal area.
2. The distance between 2 places is 7½ miles, and measures on a map 1·1 inches. Draw a scale of miles to suit the map representing 40 miles. By the diagonal method make the scale to show furlongs. Write down the representative fraction, and show your calculations.
3. With a centre C and radius of 3 inches describe a sector of a circle ACB, having the angle at C equal to 60°. In the sector inscribe a square having two of its corners in the arc AB.
4. With a centre C and radius CB equal to 1·5 inches describe a circle and set off an angle BCA equal to 45°. Make CA equal to 2·75 inches and describe a second circle touching the first in B and passing through the point A.
5. Describe a triangle having its three sides 2·75 inches, 2·25 inches, and 1·5 inches respectively, and divide the triangle into three parts in the ratio of the numbers 3, 4, and 5 by lines parallel to its shortest side.
6. Determine the plan and elevation of a cube of 2 inches edge, having one face inclined at 50° and one edge in that face making an angle of 25° with the Horizontal Plane.

INDIAN PUBLIC WORKS AND TELEGRAPH DEPARTMENTS, 1878.

GEOMETRICAL DRAWING. (2.)

Saturday, 27th July 1878. 10 A.M. to 1 P.M.

[Note.—*All construction lines must be left visible.*]

1. The object of a star map is to show on paper the relative distances of stars from each other, as perceived by the eye when looking at them. State if you would adopt or reject "Perspective" as a method of constructing star maps, and give your reasons.
2. The dark line (fig. 1) represents the near side of an oblong rectangular frame hung on a wall. Prick the figure through to your paper. Complete the frame, the base being $1\frac{1}{2}$ times as long as the side. Distance of the eye from the centre of the picture, 6 inches.
3. It is desired to place a folding screen of 4 equal leaves as the background to a picture. When opened let the angles at the hinges be 40°, 50°, and 40°. Let the centre of the picture be directly under one of the end corners of the screen and a short distance from it. Draw such a screen, assuming all dimensions required.
4. The two given lines (fig. 2) are pictures of two horizontal lines. The artist has marked the points *a* and *b* as their centres. On the supposition that *a* is correct pronounce as to the correctness of *b*. If wrong, place it in its true position.

Fig. 1.

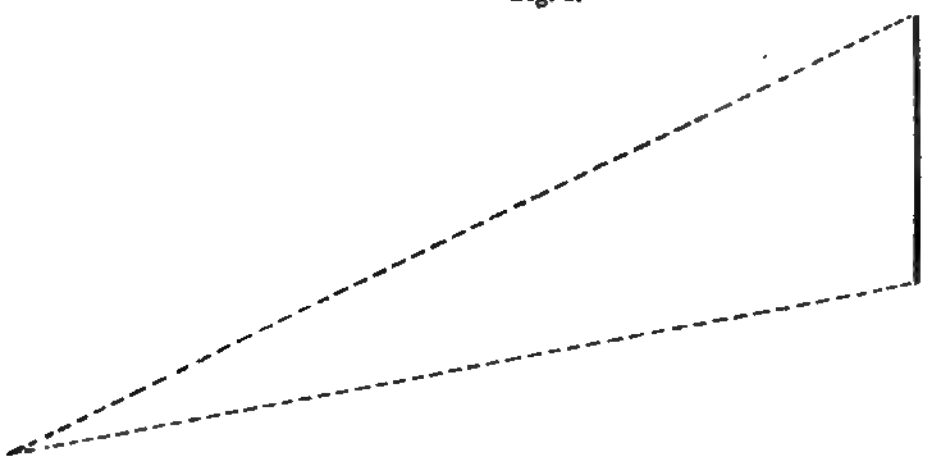

Fig. 2.

INDIAN PUBLIC WORKS AND TELEGRAPH DEPARTMENTS, 1878.

GEOMETRICAL DRAWING. (3.)

Saturday, 27th July 1878. 2 P.M. to 5 P.M.

1. Two adjacent sides, 3 inches long, of a square are inclined to the horizon at 25° and 40° respectively. Draw a plan of the square; determine the inclination to the horizon (1) of the plane in which it lies, and (2) of each diagonal.
2. The horizontal traces of two planes, inclined to the horizon at 30° and 50° respectively, intersect each other at an angle of 90°. Determine the true angle contained between the planes.
3. Explain the construction of an isometric scale. What relation does it bear to a true scale? What lines only can be measured from it?
4. A truncated cone is 3 ft. high, its base and top having diameters of $2\frac{1}{2}$ and 2 ft. respectively; on its top a regular triangular prism 4 ft. long, the edges of its base measuring $1\frac{1}{2}$ ft., lies on one of its faces; the centre of gravity of this face coinciding with the axis of the truncated cone. Draw the isometric projection of the compound figure, making the intersections of the faces of the prism isometric lines.

Time scale $\frac{1}{12}$.

FREEHAND DRAWING.

Thursday, 25th July 1878. 10 A.M. to 2 P.M.

Make a careful copy of the chromo-lithograph supplied to you, shading it and colouring it to the best of your judgment, and carrying it as far as time will permit.

FREEHAND DRAWING.

Thursday, 25th July 1878. 3 P.M. to 5 P.M.

Give as complete a representation as you can of the object supplied to you, using sepia, pen, or pencil, according to your own choice; and making your drawing not less than six inches in length.

OPEN COMPETITION OF JULY 1878 FOR THE ROYAL INDIAN ENGINEERING COLLEGE.—TABLE OF MARKS.—SELECTED CANDIDATES.

Order of Merit.	NAME.	Age on 1st July 1878.	English Composition, History, and Literature.	Mathematics.	Latin.	Greek.	French.	German.	Inorganic Chemistry.	Heat and Light.	Electricity.	Geology.	Drawing.		Total.
													Mechanical.	Freehand.	
	Maxima - - - - - - -		750	2,500	1,000	1,000	750	750	700	700	700	700	500	500	
1	Rawson; Edward Creswell - - - -	19	83	1,991	625	225	211	—	—	—	88	—	—	—	3,173
2	Le Maistre; George Harry - - - -	19	217	1,834	—	—	309	—	—	257	0	—	218	—	2,835
3	Webb; Arthur Lewis - - - -	17	119	1,650	632	—	284	—	28	0	—	—	8	0	2,721
4	Mackenzie; Archibald Thomas - - -	18	222	704	627	272	335	510	—	—	—	—	—	—	2,670
5	Deuchars; George - - - - -	18	0	1,675	—	—	263	146	0	52	21	—	200	173	2,530
6	Weightman; Walter James - - -	19	0	1,671	—	—	325	250	—	4	0	—	151	120	2,521
7	Hutton; Charles Herbert - - - -	18	178	1,054	313	—	189	390	0	—	—	239	113	0	2,476
8	Pym; Francis Harding - - - -	17	164	1,216	—	—	276	461	—	—	—	—	94	180	2,411
9	Marjoribanks; Charles Henry Dillon - -	19	311	1,489	635	—	—	—	—	—	0	—	—	—	2,385
10	Finnimore; Benjamin Kington - - -	18	214	1,084	454	—	117	—	134	145	—	—	148	0	2,246
11	Giles; Walter - - - - -	18	196	611	523	0	341	414	0	46	—	—	55	0	2,186
12	Rennick; Charles Skrymsher - - -	19	25	1,126	—	—	273	401	—	0	—	—	328	30	2,183
13	Kemball; Henry Vero Rooke - - -	19	0	1,309	306	0	235	—	—	—	244	—	57	—	2,151
14	Phelips; Henry Vivian Majendie - - -	18	185	1,096	277	—	255	160	15	—	—	—	138	0	2,126
15	Raven; Percy Earle - - - - -	19	173	754	594	364	207	—	—	—	—	0	0	—	2,092
16	Medlicott; John Henry - - - -	19	98	1,637	0	—	0	—	—	—	—	207	149	—	2,091
17	Light; Lionel Arnold - - - -	17	33	1,245	420	—	227	—	0	—	—	79	43	0	2,047
18	Arnott; Marmaduke Henry - - -	19	260	1,381	—	—	101	—	59	0	150	—	85	—	2,036

Open Competition of July 1878 for the Royal Indian Engineering College.—Table of Marks.—Selected Candidates—*continued.*

Order of Merit.	Name.	Age on 1st July 1878.	English Composition, History, and Literature.	Mathematics.	Latin.	Greek.	French.	German.	Inorganic Chemistry.	Heat and Light.	Electricity.	Geology.	Drawing.		Total.
													Mechanical.	Freehand.	
	Maxima		750	2,500	1,000	1,000	750	750	700	700	700	700	500	500	
19	Strachey; Richard Sholto	19	64	1,367	316	—	155	—	—	—	96	—	—	—	1,998
20	O'Brien; Cuthbert James	19	306	1,285	—	—	0	—	67	115	0	—	139	75	1,987
21	Verschoyle; James Kynaston Edwards	19	37	797	446	410	264	—	—	—	—	—	31	—	1,985
22	Whitely; John Joseph	18	240	1,134	254	86	202	—	—	—	—	—	20	—	1,936
23	Mills; John Charles	19	247	916	—	—	208	—	49	199	—	—	240	75	1,934
24	Butcher; Lewis Herbert	18	106	754	—	—	430	432	—	—	—	—	134	60	1,916
25	White; Charles Arthur	18	150	1,227	110	—	37	—	48	—	—	—	262	65	1,899
26	Batten; Sisley George	18	0	1,257	—	—	182	—	60	0	69	—	222	105	1,895
27	Gardiner; Edward Rawson	18	277	730	—	—	172	221	0	—	—	259	131	12	1,802
28	Buck; Richard David	19	275	974	—	—	249	—	216	48	—	—	0	10	1,767
29	Scobie; Donald Mackay	19	152	663	442	0	353	—	—	—	—	—	152	0	1,762
30	Jackson; Mountstuart Hungerford	18	73	716	347	—	261	—	—	—	—	—	173	180	1,750
31	Drew; William	18	0	832	—	—	107	396	0	181	45	—	88	25	1,676
32	Chirnside; James Bernard	18	96	833	—	—	217	—	75	103	—	—	209	110	1,643
33	Tickell; Richard Hugh	17	0	1,082	—	—	—	—	—	—	0	—	285	215	1,582
34	Maunsell; Frederick William	19	102	1,116	0	—	249	—	48	—	—	—	60	—	1,575
35	Cox; Spencer	18	99	805	338	—	338	—	—	—	—	—	0	—	1,570

INDIAN PUBLIC WORKS AND TELEGRAPH DEPARTMENTS, 1878.

TABLE OF MARKS.—CANDIDATES NOT SELECTED.

Order of Merit.	English Composition, History and Literature.	Mathematics.	Latin.	Greek.	French.	German.	Inorganic Chemistry.	Heat and Light.	Electricity.	Geology.	Drawing.		Total.
											Mechanical.	Freehand.	
Maxima -	750	2,500	1,000	1,000	750	750	700	700	700	700	500	500	
36	57	978	—	—	207	—	—	—	—	38	52	190	1,522
37	0	1,267	—	—	—	—	—	—	—	0	210	—	1,477
38	0	1,131	—	—	67	—	0	0	—	—	178	100	1,476
39	0	1,033	—	—	—	—	182	6	119	—	118	0	1,458
40	170	562	437	48	195	—	—	—	—	—	7	—	1,419
41	0	610	435	—	335	—	—	—	—	—	0	0	1,380
42	0	837	—	—	145	282	0	0	—	—	57	0	1,321
43	3	918	41	—	314	—	—	—	—	0	43	0	1,319
44	0	843	—	—	67	—	—	138	42	—	123	10	1,223
45	0	717	350	155	—	—	—	—	—	—	0	0	1,222
46	9	772	154	—	135	—	—	—	—	—	143	0	1,213
47	0	702	—	—	226	228	—	—	—	—	44	0	1,200
48	36	461	83	0	361	0	—	—	—	—	218	33	1,192
49	30	806	0	—	62	—	—	36	0	—	198	40	1,172
50	54	890	—	—	—	—	205	0	0	—	—	—	1,139
51	0	826	—	—	35	—	0	—	0	86	177	—	1,124
52	0	564	338	—	144	—	—	—	—	50	0	0	1,096
53	0	1,004	—	—	0	—	—	0	0	—	45	—	1,049
54	0	767	—	—	23	0	0	0	—	—	100	115	1,005
55	43	496	37	—	151	—	—	—	—	—	98	155	980
56	168	582	0	—	27	—	0	—	—	73	75	0	925
57	192	565	—	—	138	0	0	0	—	—	—	—	895
58	0	715	0	—	135	—	0	—	0	—	14	—	864
59	131	649	0	—	—	—	0	—	57	—	—	—	837
60	0	499	—	—	—	—	—	—	—	—	—	—	499

*** In addition to the above, 49 candidates presented themselves, but failed in the obligatory part of the examination.

TABLE SHOWING THE RESULTS OF AN EXAMINATION, HELD ON THE 16TH JULY 1878 AND FOLLOWING DAYS, OF CANDIDATES FOR APPOINTMENTS IN THE INDIAN TELEGRAPH DEPARTMENT.

Number in Order of Merit.	Name.	English.	Mathematics.	Latin.	Greek.	French.	German.	Inorganic Chemistry.	Heat and Light.	Electricity and Magnetism.	Geology and Physical Geography.	Drawing.		Total.
												Mechanical.	Freehand.	
	Maxima -	750	2,500	1,000	1,000	750	750	700	700	700	700	500	500	
1	Lees; R. O. - -	0	1,033	—	—	—	—	182	6	119	—	118	0	1,458
2	Thomas; C. L. - -	169	685	53	—	136	254	—	—	—	—	97	0	1,394
3	Kenyon; E. A. - -	124	747	334	0	160	—	—	—	—	—	—	—	1,365
4	Smith; H. W. - -	113	211	443	280	165	—	—	—	—	—	—	—	1,212
5	Mallet; S. P. - -	0	101	4	0	240	450	—	—	—	—	—	150	945
6	Morton-Shaw; W. -	0	750	0	0	0	—	—	—	—	—	—	—	750
7	Matthews; H. M. L. -	61	399	0	0	75	0	0	—	—	—	113	25	673
8	Olphert; H. S. - -	84	176	198	0	149	—	—	—	—	—	0	0	607
9	- - - -	0	434	—	—	—	—	—	—	0	—	15	—	449
10	- - - -	0	113	97	109	107	—	—	—	—	—	0	—	426
11	- - - -	0	194	—	—	—	—	—	—	—	—	—	—	194
12	- - - -	0	121	—	—	65	—	—	0	—	0	0	—	186
13	- - - -	0	164	0	0	0	—	—	—	—	—	—	—	164
14	- - - -	—	75	—	—	—	—	—	—	—	—	—	—	75

7.—PAPERS SET AT A COMPETITIVE EXAMINATION OF CANDIDATES NOMINATED BY THE SECRETARY OF STATE FOR INDIA FOR APPOINTMENTS IN THE INDIA FOREST DEPARTMENT.

REGULATIONS.

PARTICULARS respecting the SELECTION of CANDIDATES for NOMINATION to JUNIOR APPOINTMENTS in November 1878.

January 1878.

AN examination will be held on the 20th day of November 1878, and following days, to select five young men, *if so many are found duly qualified*, to be trained in France for the Forest Service of India.

Applicants must be natural-born British subjects, and they must be above 17 and under 21 years of age on the 20th of November 1878. They must be unmarried, and if they marry before they leave this country for India they will forfeit their appointment as Junior Assistants.

Applicants must send to the Revenue Department of the India Office on or before the 1st of November next.

1. Their names and parentage, a certificate or other satisfactory evidence of the date of their birth, and a statement of consent from parents or guardians.

2. A statement of the places of education at which they may have been since they were nine years old, accompanied by testimonials of good conduct during the last two years, and proof of their having attained a certain standard of proficiency in the following branches of knowledge.

I. English writing from dictation, and English composition.
II. Arithmetic in all its branches.
III. Algebra, up to and including the binomial theorem.
IV. Geometry (1st, 2nd, 3rd, 4th, and 6th books of Euclid) and plane trigonometry.
V. Elements of botany, geology, mineralogy, and chemistry.*
VI. Surveying, land measuring, plan drawing, and the use and adjustment of instruments.
VII. A good colloquial knowledge of French (to be tested partly by dictation), with the facility of translating from that language.

A preference will be given to those candidates who, in addition to the above, show proficiency in translation into French, in the elements of mechanics and physics, and freehand drawing.

They must appear personally at the India Office on the 18th of November next, between the hours of 11 and 4.

Such applicants as are admitted to be candidates will be directed to appear for medical examination before the Indian Medical Board; active habits and a strong constitution, with good vision and hearing, are essential.

Those who are passed by the Board will be examined by the Civil Service Commissioners on the 20th and following days in the various branches of knowledge mentioned above.

---

* A certain amount of knowledge in each of these subjects is necessary to enable candidates to follow the courses of lecture given at Nancy. At the examination, however, *proficiency* will only be required in the elementary branches of any two of them.

INDIA FOREST SERVICE. Nov. 1878.

There will also be an examination with a view to testing the physical capabilities of the candidates.

From among the candidates who attain the required standard, Her Majesty's Secretary of State for India will select those whom he deems best adapted to the service.

The candidates accepted by the Secretary of State must undergo a regular course of training of two years and a half in the management of forests and the science of forestry, in surveying, road making, and the natural sciences. For this purpose the selected candidates will be directed to proceed to the school of forestry at Nancy, France.

The course of training will commence on the 1st of March 1879, and end in the autumn of 1881. Successful candidates will be required to attend at the India Office on a day in February 1879, to be fixed hereafter, to receive their letters of introduction before starting for the continent.

During the course of training the candidates will be expected to conduct themselves throughout in a proper and gentlemanlike manner; to obey the injunctions of the officers and professors appointed to instruct them; to use due diligence in the practical work and in their studies, and zealously to improve every opportunity for learning that may be offered them. Candidates who do not satisfy these conditions, or who may in other respects not be found fit for the duties of a forest officer in India, will be removed from the list of candidates on the report of the officer entrusted with the general direction of their studies.

At the end of each year of study in the school an examination will be held by the officers and professors entrusted with the instruction of the candidates. Those pupils who at these examinations fail to obtain the minimum standard of marks required from all in the school will, except in cases of certified illness, render themselves liable to be at once removed, and to forfeit all claims to enter the service.

At the conclusion of the course at Nancy, successful candidates will be required to appear again before the Medical Board, and if the report upon their health is satisfactory, will be nominated Junior Assistants in the Forest Department in India, their seniority being regulated by the result of the final examination.

Exclusive of school fees (100*l.*), which will be paid by the Secretary of State, the necessary cost to candidates of board, lodging, and all other expenses at Nancy ought not to exceed 180*l.* per annum, or 450*l.* for the whole course of 2½ years. Board and lodging may be estimated at 8*l.* per mensem, and school expenses, tours, &c. at 50*l.* per annum, leaving a margin of 34*l.* a year for journeys, and other minor expenses. This cost the Secretary of State is willing still further to diminish by the payment of a sum of 150*l.* to those candidates whose conduct and progress are satisfactory. The sum will be payable by instalments at the close of each term, upon the recommendation of the Directors of the Forest School, countersigned by the officers charged with the supervision of the students.

The amounts of the several instalments, and the dates on which they fall due, are as follows:—

	£	s.	d.
First year, on or after November 1st -	41	13	4
Second year, „ May 1st - -	25	0	0
Second year, „ November 1st -	25	0	0
Third year, „ May 1st - -	25	0	0
Third year, „ September 1st - -	33	6	8
Total paid by Government - -	150	0	0

INDIA FOREST SERVICE. Nov. 1878.

By the terms of the convention between the English and French Governments for the maintenance of pupils in the Forest School at Nancy, each pupil is bound to lodge 2,400 francs (96*l.*) for his maintenance during the first eight months of his stay at Nancy, and 3,600 francs (144*l.*) during each of the following years, to be paid into the hands of the School Treasurer, as a condition of the pupil being admitted and subsequently allowed to remain at Nancy. This sum must be paid by the parents or guardians of the pupils into the Bank of England, to the credit of the Secretary of State for India, on or before the dates indicated below, for which purpose receivable orders will be transmitted from this office shortly before each payment becomes due.

The amounts to be paid on account of each student, and the dates on which they will fall due, are as follows:—

	£
First March, for eight months - - -	96
First November, for six months - - -	72
First May - - - - - -	72
First November - - - - -	72
First May to the end of the course - - -	72

Towards this, however, the Government allowance specified above will be paid in the case of those students whose conduct and progress have been satisfactory, but it must be clearly understood that in case the Government allowance is withheld for any reason it must be made good by the parents or guardians. Otherwise, the sums to be periodically paid by the parents and guardians will be as follows:—

	£	*s.*	*d.*
First March - - - - -	96	0	0
First November - - - -	30	6	8
First May - - - - -	47	0	0
First November - - - -	47	0	0
First May - - - - -	47	0	0

The difference in excess of 144*l.*, for journeys and amusements, can be paid at discretion by the parents, either direct to the student or through the treasurer. Any balance in the hands of the treasurer at the end of each half year will be repaid on the demand of the parents or guardians.

In the interval between the conclusion of the course of instruction on the continent and the departure of the candidates for India, they will be required either to visit the Scotch Forests, the Dockyards, or some of the large timber slides in the Vosges or Black Forest, or to undergo a short course of botany at Kew, as may in each case be deemed most expedient.

Within a month of his nomination as Junior Assistant, each nominee must sign articles of agreement, describing the terms and conditions of his appointment; and he must embark for India when required to do so by the Secretary of State, who will provide for the expenses of his passage. Any nominee not embarking when required will forfeit his appointment. Otherwise he will be allowed pay, at the rate of 250 rupees a month, from the day of his arrival in India.

On arrival in India the nominee will be required to report himself to the Government of India (or to the Government of Bombay or Madras, in case he should be sent to one of these Presidencies), and he will then be posted to such part of the forests as the service may require.

On reaching the place to which he may be appointed, the nominee will become entitled to all the rights and privileges, in respect of pay and

INDIA FOREST SERVICE. NOV. 1878.

promotion, and to the leave of absence and retiring pensions, accorded to officers of the Forest Department by the rules and regulations for the time being. No rise of pay or promotion will, however, take place before he has passed an examination in such one of the native languages as may be prescribed by the Government under which he is serving.

DICTATION.

Similar to that set to Factory Inspectors, *see* p. 472.

COPYING.

Similar to that set to Factory Inspectors, *see* p. 473.

ARITHMETIC.

Similar to that set to Constabulary Cadets, *see* p. 483.

ADDITION.

Similar to that set to Constabulary Cadets, *see* p. 485.

HIGHER ARITHMETIC.

Time allowed, $2\frac{1}{2}$ hours.

N.B.—*It is important that the working as well as the answers to the questions should be sent up.*

1. Find the value of $1\cdot\dot{3}\dot{6}$ of half a crown $+ 2\cdot\dot{3}\dot{7}\dot{8}$ of 5*s.* 6*d.* $+ 0\cdot\dot{4}\dot{8}$ of 3*l.* 6*s.*
2. Multiply by duodecimals 9 ft. 3 in. 5 pts. by 6 ft. 10 in. 7 pts., and the product by 10 ft. 11 in. What does the product become when expressed in cubic feet, cubic inches, and the fraction of a cubic inch?
3. Resolve the numbers 360, 18900, 79380 into their prime factors, and then deduce their L.C.M.
4. Find the square root of $540\frac{1540}{1849}$, and the cube root of 912·673.
5. A tradesman's prices are 15 per cent. above cost price. If he allows a discount of 2*l.* on a bill of 46*l.*, what profit does he make per cent.?
6. Find the cost of plating the outside of a cubical box containing 37 cubic feet 64 cubic inches, at 3*s.* per square foot.
7. A can do a piece of work in 6 days of 8 hours, B in 8 days of 9 hours, and C in 12 days of 12 hours. In how many hours would they do it, all working together?
8. A testator bequeaths 4,000*l.* to A, B, C, and D, to be divided in the proportion of $\frac{1}{2}$, $\frac{1}{3}$, $\frac{1}{4}$, $\frac{1}{5}$. What will each receive?
9. A cistern is filled by a pipe in 3 hours and emptied by a second pipe in 4 hours. If both pipes be open together for 5 hours and the discharge pipe be then closed, how long will it take to fill the cistern?
10. A man who has 40,000*l.* stock in the New Three per cents sells out at $94\frac{1}{2}$, and invests in India 4 per cents at par. Find the alteration in his income.

11. A wine merchant buys spirit at 17*s.* per gallon and mixes it with spirit which cost him 24*s.* a gallon in the proportion of three gallons of the former to one of the latter. At what price per gallon must he sell the mixture in order to realize a profit of 12 per cent. on its cost.

INDIA FOREST SERVICE. Nov. 1878.

12. At what time between 12 and 1 o'clock are the hour and minute hands of a clock exactly opposite each other?

SUBJECTS FOR ENGLISH COMPOSITION.

Time allowed, 2 hours.

In this Exercise attention should be paid to handwriting, spelling, punctuation, grammar, and style.

I. Ornamental trees;

Or,

II. "There is a tide in the affairs of men
Which, taken at the flood, leads on to fortune:
Omitted, all the voyage of their lives
Is bound in shallows and in miseries."

Discuss the importance of Opportunity.

ALGEBRA (TO BINOMIAL THEOREM).

Time allowed, 3 hours.

1. If $a=7$, $b=6$, $c=5$, $d=3$; find the value of

$$\frac{a-\{b-(c+d-a)\}}{a-\{(a-b)+(c-d)\}}\left\{\frac{bcd}{ac-d}\right\}^{\frac{1}{2}};$$

and if $u=\frac{1}{2}\left(x+\frac{1}{x}\right)$, $v=\frac{1}{2}\left(y+\frac{1}{y}\right)$, show that

$$uv+\sqrt{u^2-1}\ \sqrt{v^2-1}=\frac{1}{2}\left(xy+\frac{1}{xy}\right).$$

2. Multiply $a^{\frac{1}{2}}b^{\frac{1}{2}}-a^{\frac{1}{2}}bc^{\frac{1}{2}}+b^{\frac{1}{2}}c^{\frac{1}{2}}$ by $a^{\frac{1}{2}}b^{\frac{1}{2}}+a^{\frac{1}{2}}b^{\frac{1}{2}}c^{\frac{1}{2}}+c^{\frac{1}{2}}$.

Divide $9x^4-52x^2y^2+64y^4$ by $3x-4y$; and

$$\left\{x+\frac{1}{x}\right\}^2-\left\{y+\frac{1}{y}\right\}^2 \text{ by } xy-\frac{1}{xy}.$$

3. Simplify $\frac{1}{2}\left\{\frac{1}{x^2-y^2}+\frac{1}{x^2+y^2}\right\}\times\left(x^2-2xy+y^2-\frac{2y^3}{x}\right)$; and show that, if $\frac{a}{b}=\frac{c}{d}=\frac{e}{f}$, each of these fractions

$$=\sqrt{\frac{ma^2+nc^2+re^2}{mb^2+nd^2+rf^2}}.$$

4. Prove the rule for finding the Greatest Common Measure of two algebraical expressions.

Find that of $3x^4-4x^3+1$ and $4x^4-5x^3-x^2+x+1$.

Find also the Least Common Multiple of $(1+x)$ $(1+x^2)$ $(1+x^3)$, $(1-x)$ $(1-x^2)$, $(1-x^3)$, $(1+x^6)$, and $(1-x^6)$.

INDIA FOREST SERVICE. Nov. 1878.

5. Find the square root of $9+6\sqrt{2}$, and of the expression

$$x^6+\frac{1}{x^6}-2x^4+x^2-\frac{2}{x^2}+2.$$

6. Solve the equations :

i. $\left.\begin{aligned} x+y+z&=6. \\ 2x+3y+4z&=20. \\ 3x+4y+5z&=26. \end{aligned}\right\}$

ii. $9x^2+3x=2.$

7. What is meant by a "root" of a quadratic equation? Determine the values of a and b when the roots of $x^2-ax+b=0$ are 2 and 3.

If the roots of $x^2-px+q=0$ are two consecutive integers, prove that $p^2-4q-1=0$.

8. Explain the difference between permutations and combinations. If the number of permutations of a certain number of things taken 3 together is to the number of combinations of the same things taken 5 together as 1 : 5, find the number of things.

9. Transfer 42300 from the scale of *four* to that of *seven*. 2311 in the scale of *ten* becomes $108t$ (where t represents *ten*) in a new scale. Find the radix of the new scale.

10. There are two series, one in Arithmetic and the other in Geometric Progression. The first term and the number of terms in each are unity and n ; the common difference in the first is p, and the common ratio in the second is r.

If S and S′ are the sums of the two series, and if $p=\frac{r^n+1}{1-n}$,

show that $S : S' :: \frac{n}{2}(1-r) :$

Insert two geometric means between $\frac{2}{9}a^3$ and $6b^3$.

11. A person travelling by railway counts the number of telegraph posts that he passes during $1\frac{1}{2}$ minutes. This number is equal to the number of miles he traverses in half-an-hour.

Find the distance between two consecutive posts.

12. Expand $(a+x)^{\frac{3}{2}}$ as far as the first term which has a negative coefficient.

Find the greatest term in $(1+x)^{\frac{3}{2}}$ when $x=10$.

13. Given $\log 2=\cdot3010300$, $\log 3=\cdot4771213$, find $\log 7\cdot2$, $\log \cdot0006$, and $\log(\cdot045\times\cdot0\dot{6})$.

Find the relation between the two logarithms p and q of the same number n to the bases a and b.

EUCLID (BOOKS I.–IV. AND VI.).

Time allowed, 3 hours.

1. If from the ends of the side of a triangle there be drawn two straight lines to a point within the triangle, these shall be less than the other two sides of the triangle, but shall contain a greater angle.

INDIA FOREST SERVICE. Nov. 1878.

2. Triangles upon equal bases and between the same parallels are equal to one another.

A straight line EF cuts the sides AD and BC of a parallelogram ABCD in E and F. Shew that if the triangles BEF and CED are equal, EF bisects the parallelogram.

3. Describe a parallelogram equal to a given rectilineal figure, and having an angle equal to a given rectilineal angle.

4. Divide a given straight line into two parts, so that the rectangle contained by the whole line and one of the parts may be equal to the square on the other part.

5. Angles in the same segment of a circle are equal to one another.

Two circles are drawn intersecting in P and Q. The line joining their centres is drawn cutting the circles in A, B, C, and D taken in order; *i.e.*, one circle in A and C, and the other in B and D.

PB and PC are produced to cut the circles in R and S. Shew that the angles AQR, DQS are equal.

6. The angle in a semi-circle is a right angle; the angle in a segment greater than a semi-circle is less than a right angle; and the angle in a segment less than a semi-circle is greater than a right angle.

If two circles cut one another, and tangents to one circle at the points where it meets the second intersect on the circumference of the second, then this circle passes through the centre of the first circle.

7. Describe an isosceles triangle having each of the angles at the base double of the third angle.

If A be the vertex and BD the base of the constructed triangle, D being one of the points of intersection of the two circles employed in the construction, and E the other, and AE be drawn meeting BD produced in F, prove that AED and ABD are similar triangles.

8. The sides of a triangle are cut similarly by a straight line parallel to the base.

The internal bisector of the angle A of a triangle ABC meets the base in D, and through D a straight line is drawn meeting the sides AB, AC in P and Q respectively. Show that if PD=QD, then BP : CQ::BA : CA.

9. The rectangle contained by the diagonals of a quadrilateral figure inscribed in a circle is equal to both the rectangles contained by its opposite sides.

PLANE TRIGONOMETRY.

Time allowed, 3 hours.

1. Explain what is meant by the circular measure of an angle. How many degrees are there in the angle whose circular measure is θ?

2. Prove from a figure that—

$$\cos(A-B)=\cos A\cos B+\sin A\sin B,$$

when A lies between 315° and 360°, and A—B between 180° and 225°.

Trace the changes in sign and magnitude of $\sin\theta - \sqrt{3}\cos\theta$, as θ increases from $\frac{\pi}{2}$ to $\frac{3\pi}{2}$.

Find a formula expressing all the angles that have the same tangent as a given angle.

Find the value of $\sin 18°$, and show from the value of $\cos 22\frac{1}{2}°$ that—

$$2\cos 5°\ 37'\ 30'' = \sqrt{2+\sqrt{2+\sqrt{2+\sqrt{2}}}}.$$

Prove the identities:

i. $\sec^2 A = 1 + \tan^2 A$.

ii. $\sin 3A = 3\sin A - 4\sin^3 A$.

iii. $\cos A + \cos(120° - A) + \cos(120° + A) = 0$.

Solve the equations:

i. $2\sin\theta\sin 3\theta - \sin^2 2\theta = 0$.

ii. $\sin\frac{\alpha}{2} = \operatorname{cosec}\alpha - \cot\alpha$.

iii. $\cos(x+y) + \cos(x-y) = 2$.

$$\sin\frac{x}{2} + \sin\frac{y}{2} = 0.$$

Eliminate φ from the equations—

$$\left.\begin{aligned} p &= \sec\varphi - \cos\varphi \\ q &= \operatorname{cosec}\varphi - \sin\varphi \end{aligned}\right\}.$$

ABC are the angles of a triangle, abc its sides, $2s$ the perimeter, and Δ its area; show that—

i. $a\sin B = b\sin A$.

ii. $\sin 2A + \sin 2B + \sin 2C = 4\sin A\sin B\sin C$.

iii. $\Delta = \sqrt{s(s-a)(s-b)(s-c)}$

$$= \frac{2abc}{a+b+c}\cos\frac{A}{2}\cos\frac{B}{2}\cos\frac{C}{2}.$$

If R and r are the radii of the circles circumscribed about and inscribed in the triangle ABC; then—

i. $r = 4R\sin\frac{A}{2}\sin\frac{B}{2}\sin\frac{C}{2}$.

ii. $\Delta\,[\sin A + \sin B + \sin C] = \frac{r}{R}s^2$.

A man ascends the slope of a hill inclined at an angle α to the horizon; and twice during the ascent, at vertical heights a and b above the level of the plain, he turns round, and observes the angle of depression of the top of a tower standing in the plain directly in front of him. If α and β are these angles, find the height of the tower and its distance from the foot of the hill. [The side of the hill may be regarded as an inclined plane.]

INDIA FOREST SERVICE. Nov. 1878.

11. The sides of a triangle, BC, CA, AB, are as 8 : 7 : 5. Find the angle A, having given

L tan 40° 54′=9·9376318.
L tan 40° 53′=9·9373765.
log 2=·3010300, log 3=·4771213.

12. The limit of $\frac{\sin\theta}{\theta}$ when θ is indefinitely diminished is unity.

FREEHAND DRAWING.

Time allowed, 3 hours.

1. Draw in perspective outline an open box 4 ft. 6 in. long by 2 ft. 6 in. broad, and 1 ft. 6 in. deep; at scale of 1 in. to the foot. The box is to be drawn with one of its angles opposite to the spectator's eye, and its sides and ends receding at equal angles (45°) from the spectator; sides towards the left and ends towards the right hand. Distance of picture 6 feet.
2. Draw in perspective outline and from memory a common street lamp, without post or support.
3. Draw the part of the annexed woodcut, which is on the right of the perpendicular line, size of copy.

4. Make a sepia drawing of the shell before you [a cockle shell, bivalve, shut].

INDIA FOREST SERVICE. NOV. 1878.

FRENCH TRANSLATION.

Time allowed, 1½ hours.

Translate into English:

1. On sait les commencements humbles et pénibles des ces parvenus. Frédéric II. n'avait, pour faire la guerre aux seigneurs qui refusaient de le reconnaître, qu'une vieille pièce de canon qu'il appelait 'sa tante Marguerite.' Frédéric II. a dit de Frédéric-Guillaume, le Grand-Electeur: "C'était un prince sans territoire, un électeur sans pouvoir, un allié sans armée." À force d'habileté, d'intrigues, d'économie, de persévérance, il répara les désordres qui avaient marqué le règne de son père, il prépara les grandeurs futures de sa dynastie, il fixa à cette machine politique et militaire, qui devait s'appeler la monarchie prussienne, les rouages propres à lui assurer la régularité et le mouvement. Ses successeurs trouvèrent une armée excellente, les caisses du trésor bien remplies, une légion de fonctionnaires dressés à la baguette et obéissant comme une meute au sifflet du veneur. Embusqués dans les marécages de la Sprée et de la Havel, ces rois de proie étaient toujours à l'affût d'une occasion, et ne s'élançaient qu'à coup sûr. Ils prirent la Silésie, la Pologne, leurs mains crochues ne se refermaient jamais vides. Administrateurs consommés, ils équilibraient leur budget au moyen d'impôts extravagants, sur les souliers, les chapeaux, et les perruques. Leurs filles se mariaient sans dot et portaient des robes de serge. La cour se nourrissait de viande fumée et de choux maigres. On fouettait sur la place publique les employés du fisc qui ne rendaient pas des comptes assez exacts.

---

2. Le jeune cavalier se disposait à tourner bride et à fausser compagnie à cet insupportable mentor, quand un coup d'œil qu'il jeta sur le chemin dissipa subitement sa méchante humeur. Il venait d'apercevoir au loin le petit bourgeois Guillaume et ses camarades, qui revenaient de la fête et regagnaient leur hameau. "Arrivez vite, mes enfants, leur cria-t-il en se dressant sur ses étriers. Arrivez vite, mes agneaux, j'ai des propositions de la dernière importance à vous faire." En s'entendant héler, les enfants levèrent les yeux, et reconnaissant Stéphane, ils s'arrêtèrent et tinrent conseil. Les insolences un peu brutales du jeune Russe l'avaient mis en mauvais renom, et les petits paysans se détournaient volontiers de leur chemin plutôt que d'affronter son humeur chagrine et sa redoutable cravache. Les huit enfants, après s'être consultés entre eux, se disposaient prudemment à battre en retraite, lorsque Stéphane, tirant de sa poche une grande bourse de cuir, se mit à l'agiter dans l'air en s'écriant: "Il y a de l'argent à gagner par ici. Arrivez donc, mes chers enfants. Je vous jure que vous serez contents de moi." La grande bourse pleine que Stéphane secouait à deux mains était une amorce bien séduisante pour les huit enfants; mais sa cravache, qu'il tenait serrée sous son bras gauche, était un épouvantail qui leur prêchait la prudence. Partagés entre la crainte et la convoitise, ils demeuraient cloués sur place, comme l'âne de Buridan entre ses deux bottes de foin; mais Stéphane eut l'heureuse inspiration de saisir sa cravache de la main droite et de la lancer sur la cime d'un arbre, où elle resta suspendue. Ce geste produisit un effet magique, et les enfants, d'un commun accord, se décidèrent à s'approcher, bien que d'un pas lent et hésitant. Guillaume seul, écoutant sa rancune ou sa défiance, s'élança

A
Links 100 0 1 2 3 4
Garden.

dans un sentier et disparut dans le taillis. La troupe enfantine s'arrêta à dix pas de Stéphane et se forma en groupe. Les plus petits se cachaient à moitié derrière les plus grands. Tous tortillaient entre leurs doigts les bouts flottants de leur ceinture; tous avaient la tête baissée, l'air gauche et honteux, et ne détachaient leurs regards de la poussière du chemin que pour lorgner du coin de l'œil la grand bourse de cuir qui dansait entre les mains de Stéphane.

TRANSLATION INTO FRENCH.

Time allowed, 1½ hours.

Translate into French:

All the bees in the neighbourhood resort to a bed of mignonette opposite to the window, and pay me for the honey they get out of it by the hum, which, though rather monotonous, is as agreeable to my ear as the whistling of my linnets. All the sounds that nature utters are delightful, at least in this country. I should not perhaps find the roaring of lions in Africa, or of bears in Russia, very pleasing; but I know no beast in England whose voice I do not account musical, save and except always the braying of an ass. The notes of all our birds and fowls please me, without one exception. I should not indeed think of keeping a goose in a cage, that I might hang him up in the parlour for the sake of his melody, but a goose upon a common, or in a farm-yard, is no bad performer: and as to insects, if the black beetle, and beetles indeed of all hues, will keep out of my way, I have no objection to any of the rest; on the contrary, in whatever key they sing, from the gnat's fine treble to the bass of the humble bee, I admire them all. Seriously, however, it strikes me as a very observable instance of providential kindness to man, that such an exact accord has been contrived between his ear and the sound with which, at least, in a rural situation, it is almost every moment visited.

SURVEYING, LAND MEASURING, AND THE USE AND ADJUSTMENT OF INSTRUMENTS.

(*See* Lithograph opposite.)

Time allowed, 3 hours.

1. Draw a fine red line from A to B on the accompanying Plan M and take this line as a base line set out for making a complete survey of the ground. Rule a form of field-book, and enter in it all the notes you would make in chaining the base AB, measuring distances and offsets with a scale. Show also, both on the plan and in your field-book, where you would leave stations on the line for future purposes.
   (This question must be answered on a separate sheet of paper.)
2. Give a brief outline of the system of carrying out a Trigonometrical Survey.
3. Explain the meaning of "Reduction to the Centre," and "Reduction to the Level of the Sea."

INDIA FOREST SERVICE. Nov. 1878.

4. Describe how you would test the adjustment for collimation of—

(1.) The Dumpy Level;
(2.) The Y Level.

Explain how you would correct any error in each.

5. Describe any ordinary Level Staff with which you are acquainted, and the method of using it. Give its length, and show by a pencil sketch how it is divided.

6. Explain the Vernier Scale as attached to the Theodolite, and make an enlarged pencil drawing showing 20° of an arc, with a vernier reading to 30 minutes.

PLAN DRAWING, I.

Time allowed, 3 hours.

1. Plot the base line and offsets, &c. from the notes entered in your field-book, to a scale of 3 chains to an inch.

2. The distance between 2 points is 5½ chains, and measures on a plan ·65 of an inch. Draw a scale of yards to suit the plan, making it of such a length that 1,000 yards are shown by it, and dividing it to show 20 yards.

3. Make up and check the columns of the Level Book on the following page, and plot the section to a horizontal scale of 3 chains to an inch and a vertical scale of 20 feet to an inch.

   From the point A rule a gradient line rising 1 foot in 150 towards B.

4. Draw (to a scale of 3 chains to an inch) a plan of a field from the following notes, and compute its area, showing all your calculations. The measurements are taken in links.

	to ⊙ K	
	1240	
J 280	1050	j
I 280	920	i
h	750	400 H
g	610	330 G
F 130	490	f
e	360	310 E
D 100	250	d
c	180	230 C
b	50	40 B
From	⊙ A	go E

LEVEL BOOK.

Back Sight.	Intermediate.	Fore Sight.	Rise.	Fall.	Height above Base.	Total Distance in Links.	Remarks.
3·24					68·25		Ordnance Bench Mark.
	2·30					0	Surface of ground at Point A.
5·31		1·29				630	
	4·20					845	
	8·60					1180	
7·25		12·31				1355	
	5·40					1610	
	3·20					1705	
	2·10					1840	
11·21		1·47				1905	
	8·70					2115	
	6·80					2230	
	4·30					2370	
7·21		2·35				2460	
	4·50					2715	
		1·19				3000	Surface of ground at Point B.

PLAN DRAWING, II.*

Time allowed, 3 hours.

Copy the accompanying Plan M to an enlarged scale of 4 chains to an inch. Both the Stream and the Road may be lightly coloured, but no colour is to be put upon any other part of the plan.

If you prefer to copy the plan to the same scale you may do so, but higher marks will be given for the enlargement.

N.B.—It is desirable that at least half of the plan should be *inked in and finished;* and you are recommended to do this before proceeding to copy the whole.

ELEMENTS OF MECHANICS AND PHYSICS (OPTIONAL).

Time allowed, 3 hours.

1. State the propositions of the triangle of forces and the polygon of forces. Do the converse propositions hold good ?

   The point P is attracted to the fixed points A and B by forces proportional to PA and PB respectively. Prove that wherever P is situated the resultant force on P passes through a fixed point.

* *See* Lithograph facing p. 455.

INDIA FOREST SERVICE. Nov. 1878.

2. Find the resultant of two parallel forces in opposite directions, and prove that when there is no single resultant the sum of the moments of the forces about every point in their plane is the same.

3. Find the centre of gravity of a triangle.

If two triangles be formed by joining the middle points of alternate sides of any hexagon, prove that their centres of gravity are coincident.

4. Find the relation between the power and the weight in a system of movable weightless pulleys in which each string is attached to the weight.

Two weights of 1 lb. each support each other by means of a fine string passing over a smooth weightless pulley, and this pulley is itself supported by another string passing over a smooth fixed pulley and carrying a weight of 2 lbs.

If one of the 1-lb. weights be gently raised, prove that the principle of virtual velocities holds good.

5. Graduate the common steelyard.

A weighing machine is constructed so that for each complete stone placed in the weighing pan an additional weight of m oz. has to be suspended at the end of the arm distant one foot from the zero point, and the odd pounds are weighed by a weight of n oz. sliding along the arm. Prove that the distance between the graduations for successive lbs. must be $\frac{6m}{7n}$ inches.

6. A balloon is rising with a velocity v, when a body is let fall from it. A rifleman, from whose position the balloon is seen at an angle of elevation of 45°, fires at the instant the body falls, the bullet leaving the rifle with the velocity $(\sqrt{3}+1)\,v$. Prove that in order to hit the body he must aim at an angle of elevation of 60°.

7. Define the terms *acceleration*, *mass*, *moving force*, and state the third law of motion.

A shot weighing 1,000 lbs. leaves a gun with a velocity of 1,500 feet per second. How long must the shot have been under the action of the powder, supposing the average pressure upon it to have been equal to a weight of 1,200 tons?

8. The path of a projectile in vacuo is a parabola.

A railway waggon open at the top is moving with a velocity of 15 miles an hour on a level line, when a stone, which has been falling vertically for three seconds, enters at the top at the end nearest the engine. Find the path of the stone relatively to the waggon.

9. Find the total pressure of a heavy fluid at rest upon any surface in contact with it.

A rectangular box contains equal quantities of two liquids, one of density ρ_1, and the other density ρ_2. Find the pressure upon one of the sides of the box when the lighter liquid floats on the surface of the heavier.

10. Find the conditions of equilibrium of a body floating in water.

Define the metacentre, and explain its use in determining the nature of the equilibrium. Upon what principles is the position of the metacentre determined in any given case?

11. Explain the construction and action of the common air-pump.

If the capacity of the barrel be $\frac{1}{4}$th that of the receiver, and if the mercury in a barometer placed in the receiver stand originally at 30 inches, how high will it stand when four barrels of air have been withdrawn?

If at the same time the temperature of the receiver be increased from 60° to 80° Fahr., find how high the barometer will now stand, the expansion of air at constant pressure for one degree Centigrade being $\frac{1}{273}$rd of its volume.

12. What are the laws which regulate the pressure of a mixture of air and aqueous vapour?

A boiler is $\frac{4}{5}$ths full of water and $\frac{1}{5}$th of air and steam, and when $\frac{1}{4}$th of the water is drawn off, the temperature being unchanged, the pressure on the safety valve becomes $\frac{2}{3}$rds what it was before.

Prove that the pressure of the steam was, originally, half that of the air.

13. What is meant by the specific heat of a gas at constant volume and constant pressure respectively? For what physical reason is the latter greater than the former?

Assuming that the weight of a cubic foot of air at the temperature of freezing water is ·08 lbs. under a pressure of 2,116 lbs. per square foot, and that the ratio of the above-mentioned specific heats for air is 1·4, find the velocity of sound in air at the same temperature, gravity being 32.

ELEMENTS OF MINERALOGY AND GEOLOGY (OPTIONAL).

Time allowed, 3 hours.

1. State the distinctive characters of the following minerals, and the kinds of strata and the other circumstances in which they occur: apatite, blende, bitter-spar, graphite, chlorite, olivine, brown hæmatite.
2. Draw figures of common forms of calcite, fluor, and gypsum. In which of these is there double refraction? Which of them show easy cleavages and in what directions?
3. What are Zeolites, and what are their general characters? In what situations are they met with? How far does their presence indicate anything as to the circumstances under which the rock in which they occur was consolidated?
4. Name some of the rock-forming minerals which are most liable to decomposition by exposure, and some which especially resist decomposition; and describe the appearances presented by rocks containing those minerals where they crop out.
5. Define basalt, greenstone, anthracite, breccia, marl, and syenite; and state the classes and subdivisions of rocks to which you refer them respectively.
6. Trace the process by which beds of (1) flint gravel, (2) crystalline limestone, (3) rock salt, are formed.
7. What are the characters of a delta? Mention two rivers producing deltas and other two which produce none, and explain the causes of the presence or absence of the delta in each case.

INDIA FOREST SERVICE. NOV. 1878.

8. What are the essential conditions in the composition and arrangement of the strata for a continual water-supply from (1) springs, (2) dug wells?
9. State the position of the Wealden in geological sequence; also the parts of the country in which it is found. Mention some of the most remarkable fossil genera found in it, and give the class and order of each.
10. In what kinds of rocks are caverns mostly met with? Explain how they are produced. To what geological period are the fossiliferous deposits found in caverns referred, and what are the particular grounds on which that reference is made?

ELEMENTS OF CHEMISTRY (OPTIONAL).

Time allowed, 3 hours.

1. Describe the preparation and the chief properties of nitrogen, carbon di-oxide, and carbon di-sulphide.
2. Give examples of slow oxidation occurring at ordinary temperatures.
3. Describe the effects of heat on phosphorus, iodine, ammonia, and ammonium nitrate, severally.
4. Describe the preparation of nitric acid, and explain the chemistry of the process. If common salt be mixed with the nitre used, how will it affect the product?
5. State the chemical effects produced by passing (1) electric sparks through atmospheric air, (2) brush discharge through air, (3) a galvanic current between plates of silver through a solution of silver nitrate.
6. It is found that 90 grs. of a sample of impure sodium carbonate will just neutralize 70 grs. of sulphuric acid: calculate the per-centage of impurity in the sample.

   (C : S : O : Na = 12 : 32 : 16 : 23.)

7. Describe and explain a method of preparing sodium carbonate from common salt.
8. In what states of combination is lead chiefly found in nature? Explain the reactions between (1) red lead and nitric acid, (2) litharge and sulphuretted hydrogen, (3) lead chloride and caustic soda.
9. What mineral substances are composed mainly of silica? Give the chief chemical characters of silica, and two methods by which it may be brought into solution, explaining the chemistry of the processes.
10. By what chemical tests can you (1) distinguish magnesian limestone from ordinary limestone, (2) detect the phosphate in a nodule consisting of a mixture of calcium carbonate and phosphate, (3) detect calcium sulphate and ammonia in a sample of water?

ELEMENTS OF BOTANY (OPTIONAL).

INDIA FOREST SERVICE. NOV. 1878.

Time allowed, 3 hours.

1. Compare plants with animals, and consider how far it is possible to lay down any absolute line of demarcation between them.
2. Describe the structure and function of Stomata, stating in what parts they are found.
3. Give a short account of the following: Stipule. Rhizome. Raphides. Gynophore. Chalaza. Prothallus.
4. Give an account of Hairs. Describe their structure, and point out the various uses to which they are subservient.
5. Compare the structures of the following fruits: Gooseberry, Strawberry, Blackberry, Mulberry.
6. Give an account of the effects of light and darkness upon the phænomena of plant-life.
7. Explain and illustrate the statement that a flower is a modified branch and its parts modified leaves.
8. In what respects do the ovules and pollen-grains of Gymnosperms differ from those of Angiosperms?
9. By what various characters are Monocotyledonous distinguished from Dicotyledonous plants?
10. Give the characters of Compositæ, and of the sub-orders into which this group is divided.

FOREST DEPARTMENT IN INDIA.—COMPETITION OF NOVEMBER 1878.—TABLE OF MARKS.

	Name of Candidate.	Arithmetic.	Orthography.	Handwriting.	Intelligence (in Dictation and Orthographical Paper).	English Composition.	Algebra.	Euclid.	Trigonometry.	Botany.	Geology.	Mineralogy.	Chemistry.	Surveying.	Plan Drawing.	French.	Mechanics and Physics.	Freehand Drawing.	Total.
	Maxima - - - -	350	300	200	100	200	300	300	300	300	300	300	300	400	400	400	300	300	5,050
1	Lace; J. H. - - - - -	253	150	140	100	115	231	200	184	82	186	58	157	225	215	301	104	40	2,741
2	Barker; F. S. - - - - -	192	215	165	95	80	109	100	163	90	148	81	201	270	160	244	18	280	2,611
3	Clifford; M. H. - - - - -	260	257	105	100	120	119	180	100	139	212	169	—	155	80	216	54	140	2,406
4	- - - - - - -	328	200	130	100	130	138	153	139	75	—	—	98	180	210	293	98	100	2,372
5	Brasier; C. E. - - - - -	145	255	110	90	80	150	236	205	—	39	21	89	80	210	234	131	190	2,265
6	Rawbone; J. - - - - -	224	100	135	90	115	183	220	117	110	77	66	114	205	165	251	2	50	2,224
7	Carr; E. S. - - - - -	244	160	135	100	100	139	200	144	120	—	—	69	185	160	205	54	150	2,165
8	- - - - - - -	271	260	150	90	110	177	232	141	35	98	24	109	35	75	193	—	150	2,150
9	- - - - - - -	203	210	130	100	120	149	208	145	78	99	135	83	145	105	244	—	0	2,149
10	- - - - - - -	201	100	105	80	110	113	190	142	128	137	90	—	185	120	237	74	60	2,072
11	- - - - - - -	235	75	135	90	90	214	190	147	75	81	49	43	85	110	206	25	50	1,900
12	- - - - - - -	175	240	130	95	140	129	97	53	82	77	24	89	70	80	194	35	80	1,790
13	- - - - - - -	162	210	125	100	130	118	133	23	12	64	28	17	55	150	223	18	190	1,758
14	- - - - - - -	189	300	170	100	110	45	55	24	53	30	13	74	140	35	204	—	50	1,592
15	- - - - - - -	211	195	140	100	120	64	57	52	45	—	—	55	95	60	369	23	0	1,586
16	- - - - - - -	248	0	120	80	100	74	146	23	8	—	—	130	80	115	222	54	150	1,550
17	- - - - - - -	213	210	140	100	80	96	90	21	—	81	19	—	75	85	223	—	110	1,548
18	- - - - - - -	203	240	130	85	70	46	87	57	—	36	17	32	60	130	235	—	100	1,528
19	- - - - - - -	187	230	110	100	140	45	16	28	54	120	26	28	15	60	272	1	40	1,472
20	- - - - - - -	119	0	110	80	95	57	15	6	—	53	19	34	105	135	329	—	100	1,257
21*	- - - - - - -	76	240	110	100	90	16	15	0	20	43	9	10	—	—	229	—	—	958

* In addition to the above, nine candidates presented themselves, but failed in the obligatory part of the examination.

8.—STATISTICS.

TABLE I.—RANK, PROFESSION, or OCCUPATION of the FATHERS of the CANDIDATES EXAMINED at the OPEN COMPETITION of April 1878 for the CIVIL SERVICE of INDIA.

PROFESSION, &c.	Number of Candidates examined.	Successful Candidates.
ARMY, Officers of	9	3
NAVY, Officer of	1	–
Member of the Indian Council	1	–
CIVIL SERVICE OF INDIA :		
(1.) Covenanted Service	4	1
(2.) Uncovenanted Service	4	–
CLERGY :		
Clergymen	4	–
Presbyterian Ministers	2	–
Wesleyan Minister	1	–
Missionary	1	–
LAW :		
Barristers	3	1
Solicitor	1	1
MEDICINE :—President of Medical College (1–0); Physicians (4–1); Surgeons (2–1); Army Surgeons (3–1); Indian Medical Service (1–0).	11	3
No occupation	6	1
Zemindar	1	1
Tutors	2	–
Banker (1–1); Merchants (4–0); Tea Merchant (1–0); Underwriter (1–0).	7	1
Land Agent	1	–
Provost-Marshal of British Colony	1	–
Book-keeper (3–1); Drapers (2–0); Builder (1–0); Butcher (1–0).	8	1
Not stated	1	–
Total	69	13

TABLE II.—SCHOOLS, &c. at which were EDUCATED the CANDIDATES EXAMINED at the OPEN COMPETITION of April 1878 for the CIVIL SERVICE of INDIA.

SCHOOLS, &c.	Number of Candidates examined.	Successful Candidates.
ABERDEEN (OLD): Gymnasium	1	–
AYR: Academy	1	–
BANBRIDGE: Academy (afterwards at Royal Academical Institution, Belfast).	1	–
BELFAST: Methodist College	1	–
Royal Academical Institution (previously at Banbridge Academy).	1	–
BECTIVE: College	1	1

OPEN COMPETITION, April 1878.

Table II.—*continued.*

Schools, &c.	Number of Candidates examined.	Successful Candidates.
BRADFORD: St. Andrew's College (previously at Foreign School, and afterwards at King's College School, London).	1	1
BRIGHTON: College - - - - -	1	1
CALCUTTA: Presidency College (afterwards at University College, London).	1	–
CHELTENHAM: College (1 previously at a Private School)	2	–
CLEVELAND: College - - - - -	1	–
CLIFTON: College (1 previously at a Private School and at Rossall).	3	1
CRANBROOK: Queen Elizabeth's Grammar School -	1	–
CREWE: Grammar School (previously and afterwards at Private Schools).	1	–
DOLLAR: Institution (previously at Inverness Academy) -	1	–
DUBLIN: Royal College of Science - - -	2	2
DUNDEE: High School (previously and afterwards at Private Schools).	1	–
DUNGANNON: Royal School (previously at a Private School).	1	–
EDINBURGH: Collegiate School (1 previously at a Private School; 1 afterwards at Foreign Schools and at University College School).	2	–
Northern Institute (afterwards at Private Schools and at Liverpool Institute).	1	–
Watson's College (previously at King William's School, Isle of Man).	1	–
ENNIS: College (previously at a Private School) - -	1	–
FOYLE: College (previously at Wesleyan Connexional School and at Portarlington).	1	–
HARROW (previously at a Private School) - -	1	–
INVERNESS: Academy (afterwards at Dollar Institution) -	1	–
ISLE OF MAN: King William's School (afterwards at Watson's College, Edinburgh).	1	–
JERSEY: Victoria College (1 previously at a Private School).	2	–
LIVERPOOL: Institute (1 previously at Northern Institute, Edinburgh, and at a Private School).	2	1
LONDON: Christ's Hospital - - - - -	1	–
Dulwich College (1 afterwards at Winchester School).	2	–
Kensington School - - - - -	1	1
King's College School (previously at Foreign Schools and at St. Andrew's College, Bradford).	1	1
University College School (1 previously at a Private School; 1 at Foreign Schools and at Edinburgh Collegiate School; and 1 at Doveton College, Calcutta).	3	–
University College (previously at Presidency College, Calcutta).	1	–
MANCHESTER: Grammar School (previously at Preston Grammar School).	1	–
MARLBOROUGH: College (2 previously at Private Schools; 1 previously at St. Marylebone and All Souls' Grammar School).	4	3
MIDLETON: College (previously at Midleton Parochial School).	1	–
Parochial School (afterwards at Midleton College).	1	–
PERTH: Academy (previously at a Private School) -	1	–

OPEN COMPETITION, April 1878.

Table II.—*continued.*

Schools, &c.	Number of Candidates examined.	Successful Candidates.
PORTARLINGTON: School (previously at Wesleyan Connexional School and afterwards at Foyle College).	1	–
PRESTON: Grammar School (afterwards at Manchester Grammar School).	1	–
REPTON (previously at Private Schools) - - -	2	–
ROSSALL (previously at a Private School, and afterwards at Clifton College).	1	–
SHREWSBURY (previously at Private Schools) - -	2	–
ST. MARYLEBONE AND ALL SOULS': Grammar School (afterwards at Marlborough College).	1	1
TONBRIDGE: Grammar School - - - - -	1	–
UPPINGHAM - - - - - -	2	–
WELLINGTON: College (previously at a Private School) -	2	1
WESLEYAN CONNEXIONAL: School (afterwards at Portarlington School and at Foyle College).	1	–
WINCHESTER (1 previously at Dulwich College and 1 at a Private School).	3	2
INDIA: Calcutta: Doveton College - - -	1	–
Hare School - - - -	1	–
Bishop Cotton's Grammar School, Bangalore -	1	–
Not named - - - - -	2	–
FOREIGN SCHOOLS (entirely) - - - -	1	–
PRIVATE SCHOOLS (entirely) - - - -	9	1
NOT STATED - - - - - -	1	–

TABLE III.—UNIVERSITIES to which belonged the CANDIDATES EXAMINED at the OPEN COMPETITION of March 1878 for the CIVIL SERVICE of INDIA.

Universities and Colleges.	Number of Candidates examined.	Successful Candidates.
OXFORD:		
Balliol - - - - - -	1	1
Corpus Christi - - - - -	1	–
Exeter - - - - - -	1	–
Keble - - - - - -	1	–
New - - - - - -	1	–
University - - - - -	1	1
CAMBRIDGE:		
Christ's - - - - - -	1	1
DUBLIN: Trinity College - - - -	5	1
LONDON - - - - - -	7	2
EDINBURGH - - - - - -	7	–
ABERDEEN - - - - - -	2	–
GLASGOW - - - - - -	2	–
QUEEN'S UNIVERSITY (IRELAND) - - -	3	1
CALCUTTA - - - - - -	1	–
MADRAS - - - - - -	1	–

OPEN COMPETITION, July 1878.

TABLE IV.—RANK, PROFESSION, or OCCUPATION of the FATHERS of the CANDIDATES EXAMINED at the OPEN COMPETITION of July 1878 for the CIVIL SERVICE of INDIA.

PROFESSION, &c.	Number of Candidates examined.	Successful Candidates.
ARMY, Officers of	13	2
NAVY, Officers of	2	—
CIVIL SERVICE OF INDIA:		
(1.) Covenanted Service	11	—
(2.) Uncovenanted Service	3	—
Home Civil Service	9	1
Consul-General	1	—
CLERGY:		
Clergymen	18	4
Presbyterian Minister	1	—
LAW:		
Judges	3	—
Barristers	4	1
Solicitors	6	—
Writer to the Signet	1	—
MEDICINE:		
Physicians	2	—
Indian Medical Service	2	—
J.P. (6–0); No Profession (10–1)	16	1
Planters	2	—
Merchants (7–0); Iron Merchant (1–0); Tea Merchant (1–0); Corn Merchant (1–0); Bankers (2–0); Seed Crusher (1–0); Brewer (1–0); Stockbroker (1–0); Shipowner (1–0).	16	—
Master of College at Cambridge (1–0); Principal of Indian Government College (1–0); Professor of languages (1–1); Schoolmasters (3–1); Tutor (1–0); Civil Engineers (5–0); Journalists (2–0); Merchant Service (1–0).	15	2
Farmer (1–0); Accountant (1–0); Clerk (1–0)	3	—
Bookseller (1–0); Draper (1–1); Decorator (1–0); Head Constable, Royal Irish Constabulary (1–0).	4	1
Not stated	2	1
Total	134	13

TABLE V.—SCHOOLS, &c. at which were EDUCATED the CANDIDATES EXAMINED at the OPEN COMPETITION of July 1878 for the CIVIL SERVICE of INDIA.

SCHOOLS, &c.	Number of Candidates examined.	Successful Candidates.
ABERDEEN: Grammar School	1	—
ARMAGH: Royal School (1 previously at a Private School, and afterwards at Kingstown School).	3	—
BATH: Somersetshire College	1	—
BEDFORD: Grammar School (afterwards at a Foreign School).	1	—
BELFAST: Royal Academical Institution	2	—

Table V.—*continued.*

Schools, &c.	Number of Candidates examined.	Successful Candidates.
		Open Competition, July 1878.
Birkenhead: School	1	-
Birmingham: King Edward's Grammar School (previously at Private Schools).	1	-
Oratory School (afterwards at St. Mary's College, Oscott).	1	-
Bishop's Stortford: High School (previously at Private Schools).	1	-
Bradford: Grammar School (1 previously at Private Schools).	2	-
Canterbury: King's School	1	-
Carlisle: High School (1 subsequently at Clifton College and a Private School; 1 at Falkirk Grammar School and High School, Edinburgh).	2	-
Ceylon: St. Thomas's School (afterwards at Cheltenham College).	1	-
Cheltenham: College (2 previously at Private Schools and 1 at St. Thomas' College, Ceylon).	5	-
Clifton: College (1 previously at High School, Carlisle, and afterwards at a Private School).	2	-
Colonial: School (afterwards at Harrow)	1	-
Cork: Midleton College (previously at a Private School and afterwards at Kingstown School).	1	-
Cranbrook: Queen Elizabeth's Grammar School	1	-
Edinburgh: Academy (1 previously at Glasgow Academy; 1 afterwards at Repton, 1 at Charterhouse, and 1 at Foreign Schools).	5	-
Collegiate School (1 afterwards at a Foreign School and at Rugby).	2	1
Fettes College	2	-
High School (1 previously at High School, Carlisle, and Falkirk Grammar School).	2	-
Erasmus Smith's: Grammar School (previously at Model National School, Galway).	1	-
Eton (3 previously at Private Schools)	4	1
Foyle: College (afterwards at Raphor Royal School)	1	1
Galway: Model National School (afterwards at Erasmus Smith's Grammar School).	1	-
Glasgow: Academy (afterwards at Edinburgh Academy)	1	-
Guildford: Grammar School (afterwards at Taunton College School and at Shrewsbury).	1	-
Haileybury: College (1 previously at Rugby, 5 previously at Private Schools).	7	1
Harrow (1 previously at Colonial School, 4 previously at Private Schools).	5	-
Hereford: Cathedral School	1	-
Jersey: St. James' Collegiate School (previously at a Private School).	1	-
Kingstown: School (1 previously at Armagh Royal School, 1 at Portora Royal School, and 1 at Midleton College, Cork, 2 previously at Private Schools).	3	-
Liverpool: Institute	1	-
Royal Institution School (afterwards at Foreign Schools).	1	-
London: Blackheath Proprietary School (1 previously at Private Schools).	2	-
Charterhouse (4 previously at Private Schools, 1 at Tavistock Grammar School, and 1 at Edinburgh Academy; 1 afterwards at Shrewsbury).	7	-

OPEN COMPETITION, July 1878.

Table V.—*continued.*

Schools, &c.	Number of Candidates examined.	Successful Candidates.
LONDON—*cont.* City of, School	1	–
Dulwich College	1	–
King's College School (2 previously at Private Schools).	3	–
Merchant Taylors' School (previously at a Private School).	1	1
St. John's Wood Collegiate School (afterwards at University College School, London).	1	–
St. Paul's	1	–
University College School (1 previously at a Private School, 1 at a Foreign School, and 1 at St. John's Wood Collegiate School).	3	1
University College	2	–
MAGDALENE: College School (previously at a Private School).	1	–
MALVERN: College (previously at a Private School)	1	–
NEWPORT: Grammar School	1	–
NOTTINGHAM: High School	1	–
OSCOTT: St. Mary's College (previously at Birmingham Oratory School).	1	–
PORTORA: Royal School (1 afterwards at Kingstown School).	2	–
RAPHOE: Royal School (previously at Foyle College)	1	1
READING: (1 previously at a Private School and afterwards at Marlborough College; 1 afterwards at a Private School).	2	–
REPTON: (1 previously at Edinburgh Academy, and 2 at Private Schools).	3	1
ROSSALL: (1 previously at a Private School)	3	2
RUGBY: (1 previously at Edinburgh Collegiate School, 1 at a Foreign School, and 2 at Private Schools; 1 afterwards at Haileybury).	4	–
SCARBOROUGH: Grammar School	1	–
SHERBORNE (1 previously at a Private School)	2	–
SHREWSBURY: (1 previously at Charterhouse, 1 at Guildford Grammar School and Taunton Grammar School, and 2 at Private Schools).	4	–
SOUTHAMPTON: Grammar School (afterwards at Hartley Institution, Southampton).	1	–
Hartley Institution (previously at Southampton Grammar School).	1	–
TAUNTON: College School (1 previously at a Foreign School, 1 previously at Guildford Grammar School, and afterwards at Shrewsbury).	3	–
TULLAMORE: St. Stanilaus College	1	1
UPPINGHAM (previously at a Private School)	1	1
WEXFORD: County School (previously at Wexford Diocesan School).	1	–
Diocesan School (afterwards at Wexford County School).	1	–
WELLINGTON: College (previously at a Private School)	1	–
WINCHESTER (1 previously at a Private School)	2	–
WINDERMERE: College (previously at a Private School)	1	–
INDIA: Bangalore, Bishop Cotton's Grammar School (afterwards at Private Schools).	2	–
Bombay, St. Mary's Institution (afterwards at a Private School).	1	–
Not stated	1	–

Table V.—*continued.*

SCHOOLS, &c.	Number of Candidates examined.	Successful Candidates.
FOREIGN SCHOOLS (entirely) - - - -	1	–
PRIVATE SCHOOLS (entirely) - - - -	17	1
NOT STATED - - - - - -	1	–

TABLE VI. — UNIVERSITIES to which belonged the CANDIDATES EXAMINED at the OPEN COMPETITION of July 1878 for the CIVIL SERVICE of INDIA.

UNIVERSITIES AND COLLEGES.	Number of Candidates examined.	Successful Candidates.
OXFORD;		
Lincoln - - - - - -	1	1
CAMBRIDGE:		
Sidney Sussex - - - - -	2	–
DUBLIN:		
Trinity College - - - - -	4	–
Catholic University - - - -	1	–
LONDON - - - - - -	7	2
EDINBURGH - - - - - -	6	2
ABERDEEN - - - - - -	1	–
ST. ANDREW'S - - - - -	1	–
QUEEN'S UNIVERSITY (Ireland) - - -	3	–
BONN - - - - - -	1	–
GIESSEN - - - - - -	1	–
CALCUTTA - - - - - -	1	–
MADRAS - - - - - -	1	–

Appendix VII.

SPECIMENS OF EXAMINATION PAPERS.

HOME CIVIL SERVICE.

Page

Papers set to Candidates for :—

1. An Inspectorship of Factories - - - - - - 472
2. Cadetships in the Royal Irish Constabulary - - - - 483
3. Inspectorships of National Schools in Ireland - - - - 491
4. Indexing and Abridging Clerkships in the Patent Office - - 518
5. Junior Clerkships in the Office of Woods, &c. - - - - 525
6. Junior Examinerships in the Office of Works, &c. - - - 532
7. The Situation of Assistant to the Surveyors, Office of Works, &c. - 534
8. The Appointment of Attaché in the Diplomatic Service - - 543
9. A special certificate in Public Law (Third Secretary, Diplomatic Service) - - - - - - - - - 546

Note.—The following examination papers, set during the year 1878, have been published in a separate form, and may be obtained through any bookseller.

Papers set to Candidates at :—

Open Competition for Assistants of Excise held in December 1877.

Open Competition for the Home Civil Service (Class I.) held in April 1878.

Open Competition for Assistants of Excise held in June 1878.

Open Competition for Men Clerkships of the Lower Division held in September 1878.

FACTORY INSPECTOR.

I.—SPECIMENS OF THE PAPERS S FOR INSPECTORSHIPS O

FOR DICTATION.

About thirty years before this time, a begun to distinguish himself in the wa education had been neglected; his extract had been a petty officer of revenue.; his gr But though thus meanly descended, th alphabet, the adventurer had no sooner body of troops than he approved himself command. Among the crowd of chiefs wh of India, none could compare with him i and the statesman. He became a gener Out of the fragments of old principalities the general wreck, he formed for himself a empire. That empire he ruled with the al of Louis the Eleventh. Uncontrolled in his pleasures, implacable in his revenge, he had yet enlargement of mind enough to perceive how much the prosperity of subjects adds to the strength of governments. He was an oppressor; but he had at least the merit of protecting his people against all oppression except his own. He was now in extreme old age; but his intellect was as clear, and his spirit as high, as in the prime of manhood. Such was the great founder of the Mahommedan kingdom of Southern India, and the most formidable enemy with whom the English conquerors of India have ever had to contend. Had Hastings been governor of Madras, this Indian chieftain would have been either made a friend, or vigorously encountered as an enemy. Unhappily, the English authorities in the south provoked their powerful neighbour's hostility, without being prepared to repel it.

FOR DICTATION. (II.)

All around the castle was a scen of busy commotion; for such funeral banquets were times of general and profuse hospitality, of which not only every one who could claim the most distant connection with the deceased, but all passengers whatsoever, were invited to partake. The wealth and consequence of the deceased Saxon nobleman occasioned this custom to be observed in the fullest extent. Numerous parties, therefore, were seen ascending and descending the hill on which the castle was situated; and when the King and his attendants entered the open and unguarded gates of the external barrier, the space within presented a scene not easily reconciled with the cause of the assemblage. In one place cooks were toiling to roast huge oxen and fat sheep; in another, hogsheads of ale were broached to be drained at the freedom of all comers. Groups of every description were to be seen devouring the food and swallowing the liquor thus abandoned to their discretion.

The ill-clothed Saxon serf was drowning the sense of his half-year's hunger and thirst in one day of gluttony and drunkenness—the more pampered burgess was eating his morsel with relish, or curiously criticising the quality of the malt and the skill of the brewer. Some few of the poorer Norman gentry might also be seen, distinguished by their shaven chins and short cloaks, and not less so by their keeping together and looking with great scorn on the whole solemnity, even while condescending to avail themselves of the good cheer which was so liberally supplied. Mendicants were of course assembled by the score, together with strolling soldiers returned from Palestine, pedlars were displaying their wares, and travelling mechanics were inquiring after employment.

FACTORY INSPECTOR.

EXERCISE TO TEST HANDWRITING.

Copy, on the form supplied, as much of the following, including the table of figures, as you can in half an hour, taking care to write as well as you can.

A STATEMENT

Showing the Gross Receipt and Net Produce of the Customs Revenue of the United Kingdom (including the Duty on British Spirits collected on behalf of the Inland Revenue) in each Financial Year from 1872 to 1876 inclusive, with the Charges of Collection thereon, and the Rate per cent. of Collection on the Gross Receipt and Net Produce respectively.

Years ended 31st March.	Gross Receipt.	Net Produce, after deducting Drawbacks, Repayments on Over-entries, &c.	Charges of Collection.	Rate per cent. of Collection.	
				On the Gross Receipt.	On the Net Produce.
	£	£	£	£ s. d.	£ s. d.
1872 -	22,930,178	22,587,252	811,602	3 10 9	3 11 10
1873 -	24,206,896	23,864,249	790,864	3 5 4	3 6 3
1874 -	23,853,224	23,577,350	810,274	3 7 11	3 8 9
1875 -	22,867,028	22,742,536	794,818	3 9 6	3 9 10
1876 -	23,769,523	23,623,003	801,994	3 7 6	3 7 11

The Gross and Net Receipt of Customs as shown in this Statement include the duty collected on behalf of the Inland Revenue, on the delivery for home consumption of British Spirits deposited in the Customs warehouses under Act 27 & 28 Vict. c. 11. The charges of collection include the cost of collecting that duty.

The Gross and Net Receipt also include duties collected at the Isle of Man, moneys received as rent for Crown premises, proceeds of goods sold for duties, and other miscellaneous receipts.

FACTORY INSPECTOR.

ARITHMETIC.

Similar to that set to Constabulary C

ADDITION.

Similar to that set to Constabulary Cadets, *see* p. 485.

SUBJECTS FOR ENGLISH COMPOSITION.

Time allowed, 2½ hours.

In this exercise attention should be paid to handwriting, spelling, punctuation, grammar, and style.

1. Describe any manufacturing process with which you are acquainted;

Or,

2. Winter, its inconveniences and pleasures.

The composition should fill not less than two folio pages.

PRÉCIS.

Time allowed, 3 hours.

*Having read the accompanying Correspondence—**

1. *Make a short Abstract, Schedule, or Docket of the several letters and other papers.*
2. *Draw up a Memorandum or Précis, i.e., a brief and clear statement of what passed, not letter by letter, but in the form of a narrative.*

DIRECTIONS.

(1.) The object of the Abstract, Schedule, or Docket is to serve as an Index. It should contain the date of each letter; the names of the persons by whom and to whom it is written; and, *in as few words as possible*, the subject of it. The merits of such an Abstract are (1) to give the really important point or points of each letter, omitting everything else; (2) to do this briefly; (3) distinctly; and (4) in such a form as readily to catch the eye.

(2.) The object of the Memorandum or Précis, *which should be, not letter by letter, but in the form of a narrative*, is that anyone who had not time to read the original letters might, by reading the Précis, be put in possession of all the leading features of what passed. The merits of such a Précis are—(1) to contain all that is important in the Correspondence, and nothing that is unimportant; (2) to present this in a consecutive and readable shape, expressed as distinctly as possible; (3) to be as brief as is compatible with completeness and distinctness.

Brevity should be particularly studied.
The Abstract should occupy 1 or 2 pages only, or 3 at the most.
The Précis about 2 pages, or 3 at the most, of ordinary handwriting.

* This was about ten pages of a copy of "Further Correspondence respecting the Affairs of South Africa." [C.—2100.]

POLITICAL ECONOMY.

FACTORY INSPECTOR.

Time allowed, 3 hours.

1. Define Capital, and distinguish Fixed and Circulating Capital.
2. What are the respective advantages of small and large cultivation?
3. Describe any attempts that have been made to substitute Co-operation for hired labour.
4. Explain the phenomena of a commercial panic.
5. What are the advantages of Free Trade?
6. In what sense does "demand" determine value?
7. State at length Adam Smith's rules of Taxation.
8. What is the relation of the interest of money to the price of land?
9. What determines the amount of wages in various occupations?
10. To what extent is the rate of Profits identical in the various employments of capital?

PURE MATHEMATICS.

Euclid (I.–VI.), Algebra (to Binomial Theorem), Trigonometry (to solution of triangles).

Time allowed, $3\frac{1}{2}$ hours.

1. Prove that any two sides of a triangle are together greater than the third side.

   If P be a moveable point in a given straight line, and A and B two fixed points, prove that the sum of the distances AP, BP is the least possible when the lines AP, BP are equally inclined to the given straight line.
2. The opposite angles of any quadrilateral figure inscribed in a circle are together equal to two right angles.
3. Prove that the two tangents which can be drawn from any external point to a circle are of equal lengths.

   If a quadrilateral figure circumscribe a circle, the sums of its opposite sides are equal.
4. Describe an isosceles triangle having each of the angles at the base double of the vertical angle.

   What use is made of this proposition in Euclid, Book IV.?
5. Define similar triangles, and prove that if two triangles are equiangular, they are also similar.
6. Find the greatest common measure, and also the least common multiple, of the expressions—

$$2x^3+6x^2+9x+27, \text{ and } x^3+10x^2+33x+36.$$

   Find also the greatest common measure, and the least common multiple, of the three expressions—

$$x^4-y^4,\ x^3-y^3, \text{ and } x^4=x^3y+2x^2y^2-xy^3+y^4.$$

7. Resolve into four factors the expression—

$$x^4-5x^2+4,$$

and prove that—

$$(x^3-ax+a^2)\,(x^3+ax+a^2)\,(x^4-a^2x^2+a^4)=x^8+a^4x^4+a^8.$$

also resolve into four quadratic factors the expression—

$$x^8+a^4x^4+a^8.$$

FACTORY INSPECTOR.

8. Solve the equations—

(1.) $(x-a)(x-b)=(x-3a)(x-$

(2.) $\left(\frac{x+a}{x-a}\right)^2=\frac{x+3a}{x-3a}$.

(3.) $\left.\begin{aligned} x^2+xy&=80 \\ 3xy-y^2&=44. \end{aligned}\right\}$

(4.) $\left.\begin{aligned} x^2+y^2+z^2&=99 \\ yz+zx-xy&=45 \\ x+y+3z&=31. \end{aligned}\right\}$

9. The hands of a watch are at right angles to each other at 3 o'clock; when are they next at right angles?

10. Having given the first term, and the common ratio of a geometrical progression, find the sum of a given number of terms. Find the sums of the series—

(1.) $128-64+32-$&c. to 12 terms.

(2.) $1+2n+3n^2+4n^3+$&c. to n terms.

11. Write down, to four terms each, the expansions of $(1+x)^{\frac{1}{2}}$, and $(1-x)^{-\frac{1}{2}}$, in powers of x.

Find the coefficient of x^r in the expansions of—

1st. $\frac{1}{(x+1)(x+2)}$ 2nd. $\sqrt{\frac{1-x}{1+x}}$.

12. Define the sine and cosine of an angle, and find the sine and the cosine of 30°.

Find an expression for all the angles which have the same sine as a given angle, and solve the equation—

$$\sin\left(2\theta+\frac{\pi}{6}\right)=\cos\left(\theta+\frac{\pi}{3}\right).$$

13. Prove the formulæ—

(1.) $\sin(A+B)=\sin A\cos B+\cos A\sin B$.

(2.) $\sin A+\sin B=2\sin\frac{1}{2}\overline{A+B}\cos\frac{1}{2}\overline{A-B}$.

(3.) $\cos^2(A+B)+\cos^2B-2\cos(A+B)\cos A\cos B=\sin^2A$.

(4.) $\cos\overline{A+60°}+\cos\overline{A-60°}+\cos\overline{A+30°}-\cos\overline{A-30°}=\sqrt{2}\cos\overline{A+45°}$.

14. Find an expression for the radius of a circle inscribed in a given triangle.

If a circle be drawn touching the side BC of a triangle ABC, and also touching the sides AB, AC produced, find an expression for its radius, and prove that the distance between the centre of this circle and the centre of the inscribed circle is equal to

$$\frac{a}{\cos\frac{A}{2}}.$$

15. Show how to solve a triangle when two sides and the included angle are given. FACTORY INSPECTOR.

If ABC be the triangle, and if $a=65$, $b=16$, and $C=60°$, find the other angles, having given

log 3 = ·4771213, Log tan 46° 20′ = 10·0202203,
log 7 = ·8450980, Log tan 46° 21′ = 10·0204732.

LATIN.

Time allowed, 3 hours.

Translate into English:

Memoria mea ingenti virtute, diversis moribus fuere viri duo, M. Cato et C. Cæsar. His genus, ætas, eloquentia prope æqualia fuere: magnitudo animi par, item gloria; sed alia alii. Cæsar beneficiis atque munificentia magnus habebatur; integritate vitæ Cato. Ille mansuetudine et misericordia clarus factus; huic severitas dignitatem addiderat. Cæsar dando, sublevando, ignoscendo; Cato nihil largiundo gloriam adeptus est. In altero miseris perfugium erat, in altero malis pernicies: illius facilitas, hujus constantia laudabatur. Postremo Cæsar in animum induxerat laborare, vigilare; negotiis amicorum intentus, sua negligere; nihil denegare, quod dono dignum esset; sibi magnum imperium exercitum, novum bellum exoptabat, ubi virtus enitescere posset. At Catoni studium modestiæ, decoris, sed maxume severitatis erat. Non divitiis cum divite, neque factione cum factioso; sed cum strenuo virtute, cum modesto pudore, cum innocente abstinentia certabat; esse, quam videri, bonus malebat; ita, quo minus gloriam petebat, eo illum magis sequebatur.

Tempore ruricolæ patiens fit taurus aratri,
  Præbet et incurvo colla premenda jugo.
Tempore paret equus lentis animosus habenis,
  Et placido duros accipit ore lupos.
Tempore Pœnorum compescitur ira leonum,
  Nec feritas animo, quæ fuit ante, manet.
Quæque sui jussis obtemperat Inda magistri
  Belua, servitium tempore victa subit.
Tempus, ut extentis tumeat, facit, uva racemis,
  Vixque merum capiant grana, quod intus habent.
Tempus et in canas semen producit aristas,
  Et ne sint tristi poma sapore, facit.
Hoc tenuat dentem terram findentis aratri,
  Hoc rigidos silices, hoc adamanta terit.
Hoc etiam sævas paulatim mitigat iras,
  Hoc minuit luctus mæstaque cordo levat.
Cuncta potest igitur tacito pede lapsa vetustas
  Præterquam curas attenuare meas.

FACTORY INSPECTOR.

Translate into Latin:

But when the two armies were drawn up ready to fig proposed that the quarrel should be decided by the combat of chosen from each army, and Tullus agreed to the proposa.. chanced that there were three brothers in each army, equal in age, strength, and valour. Horatii was the name of the three Roman brethren, Curiatii of the Alban. These were chosen to be the champions, and an agreement was made, with solemn rites, that victory should be adjudged to that people whose champions should conquer in the strife. Then the two armies sate down opposite one another as spectators of the combat, but not like common spectators, for each man felt that the question at issue was whether Rome was to be mistress of Alba or Alba of Rome. Long and bravely fought the champions. At length all the Curiatii were grievously wounded; but of the Horatii two lay dead upon the plain, while the third was yet untouched. So the surviving Horatius, seeing that, single-handed, he could not prevail, pretended to flee before his three opponents.

GREEK.

Time allowed, 3 hours.

Translate into English:

Ὁ δὲ Κῦρος εἶπεν, Ἀλλ' ἐγώ, ὦ ἄγγελέ τε καὶ Μῆδοι, οὐδέν, ἔφη, θαυμάζω εἰ Κυαξάρης, πολλοὺς μὲν πολεμίους τότε ἰδών, ἡμᾶς δὲ οὐκ εἰδὼς ὅ,τι πράττομεν, ὀκνεῖ περί τε ἡμῶν καὶ περὶ ἑαυτοῦ· ἐπειδὰν δὲ αἴσθηται πολλοὺς μὲν τῶν πολεμίων ἀπολωλότας, πάντας δὲ ἀπεληλαμένους, πρῶτον μὲν παύσεται φοβούμενος, ἔπειτα γνώσεται, ὅτι οὐ νῦν ἔρημος γίγνεται, ἡνίκα οἱ φίλοι αὐτοῦ τοὺς ἐκείνου ἐχθροὺς ἀπολλύουσιν. Ἀλλὰ μὴν μέμψεώς γε πῶς ἐσμεν ἄξιοι, εὖ τε ποιοῦντες ἐκεῖνον καὶ οὐδὲ ταῦτα αὐτοματίσαντες; ἀλλ' ἐγὼ μὲν ἐκεῖνον ἔπεισα ἐᾶσαί με λαβόντα ὑμᾶς ἐξελθεῖν· ὑμεῖς δὲ οὐχ ὡς ἐπιθυμοῦντες τῆς ἐξόδου ἠρωτήσατε εἰ ἐξίοιτε καὶ νῦν δεῦρο ἥκετε, ἀλλ' ὑπ' ἐκείνου κελευσθέντες ἐξιέναι, ὅτῳ ὑμῶν μὴ ἀχθομένῳ εἴη. καὶ ἡ ὀργὴ οὖν αὕτη, σάφ' οἶδα, ὑπό τε τῶν ἀγαθῶν πεπαυθήσεται καὶ σὺν τῷ φόβῳ λήγοντι ἅπεισι.

XENOPHON.

FACTORY INSPECTOR.

Πέλοπα κατόμνυμ' ὃς πατὴρ τοὐμοῦ πατρος
Τοῦ σοῦ τ' ἐκλήθη, τὸν τεκόντα τ' Ἀτρέα,
Ἢ μὴν ἐρεῖν σοι τἀπὸ καρδίας σαφῶς,
Καὶ μὴ 'πίτηδες μηδὲν, ἀλλ' ὅσον φρονῶ.
Ἐγώ σ' ἀπ' ὄσσων ἐκβαλόντ' ἰδὼν δάκρυ
Ὤικτειρα, καὐτὸς ἀνταφῆκά σοι πάλιν,
Καὶ τῶν παλαιῶν ἐξαφίσταμαι λόγων,
Οὐκ ἐς σὲ δεινός· εἶμι δ' οὔπερ εἶ σὺ νῦν·
Καί σοι παραινῶ μήτ' ἀποκτείνειν τέκνον
Μήτ' ἀνθελέσθαι τοὐμόν. οὐ γὰρ ἔνδικον
Σὲ μὲν στενάζειν, τἀμὰ δ' ἡδέως ἔχειν,
Θνήσκειν τε τοὺς σοὺς, τοὺς δ' ἐμοὺς ὁρᾶν Φάος
Τί βούλομαι γάρ; οὐ γάμους ἐξαιρέτους
Ἄλλους λάβοιμ' ἂν, εἰ γάμων ἰμείρομαι;
Ἀλλ' ἀπολέσας ἀδελφὸν, ὃν μ' ἦκιστ' ἐχρῆν,
Ἑλένην ἕλωμαι, τὸ κακὸν ἀντὶ τἀγαθοῦ;
Ἄφρων νέος τ' ἦν, πρὶν τὰ πράγματ' ἐγγύθεν
Σκοπῶν ἐσεῖδον οἷον ἦν κτείνειν τέκνα.
Ἄλλως τέ μ' ἔλεος τῆς ταλαιπώρου κόρης
Εἰσῆλθε, συγγένειαν ἐννοουμένῳ,
Ἢ τῶν ἐμῶν ἕκατι θύεσθαι γάμων
Μέλλει. τί δ' Ἑλένης παρθένῳ τῇ σῇ μέτα;
Ἴτω στρατεία διαλυθεῖσ' ἐξ Αὐλίδος.
Σὺ δ' ὄμμα παῦσαι δακρύοις τέγγων τὸ σὸν,
Ἀδελφὲ, κἀμὲ παρακαλῶν ἐς δάκρυα.

EURIPIDES.

Translate into Greek:

The immense booty, as well as the renown, which Pausanias had acquired at Platæa, had filled him with pride and ambition. When he returned home, he felt it irksome to conform to the simplicity and sobriety of a Spartan life, and to submit to the commands of the Ephors. He had given a signal instance of the pride with which he was inflated by causing Simonides to attribute the glory of the Persian defeat solely to himself in the epigram which he composed for the tripod dedicated at Delphi; a piece of vanity which gave such offence to the Lacedæmonians that they caused the inscription to be erased, and another to be substituted in its place. Nevertheless, in spite of these symptoms, he had been again entrusted with the command. During the whole course of it his conduct was marked by the greatest vanity and insolence; towards the end it was also sullied by treason.

FACTORY INSPECTOR.

FRENCH.

Time allowed, 3 hours.

(Including Dictation.)

Translate into English:

Si vous avez visité les côtes de Bretagne, ou tout au moins si vous avez étudié la carte de ce merveilleux pays, vous avez dû, par la configuration même de son territoire, vous expliquer le caractère de ses habitants. Les peuples empruntent sans aucun doute du pays qu'ils habitent, leurs mœurs, leur esprit et jusqu'à leur physionomie extérieure. A ce point de vue, la Bretagne devait être ce qu'elle a été: le pays des luttes et de ce sublime entêtement qui fait la nationalité. En effet, jetez les yeux sur le profil de la province bretonne depuis le cap Fréhel au nord jusqu'à la presqu'île de Rhius au sud. Voyez-vous ces aspérités sans nombre, entendez-vous ces rumeurs sans fin? C'est la lutte de la terre et de l'Océan: ce conquérant patient, parce qu'il est éternel, qui semble vouloir repousser éternellement cette lumineuse Europe dont la civilisation croissante a éclairé chaque peuple. Depuis six mille ans, l'Océan fouette donc la Bretagne de ses orages, de ses vagues et de ses colères; depuis six mille ans, il la mord à toute heure, à toute minute, à toute seconde, et il ne la mord jamais sans en emporter un morceau. Qui triomphera dans ce duel séculaire? Nul ne le sait.

A. DUMAS.

Je dis au vieux jardinier de rappeler ma jument noire qui paissait en liberté dans un verger voisin, et de la seller pour moi. La jument privée, depuis longtemps oisive, voyant la selle que le jardinier portait sur sa tête, secoua sa crinière, enfla ses naseaux, tendit le nerf de sa queue en panache, galopa un moment autour de l'enclos en faisant partir les oiseaux et jaillir la rosée de l'herbe sous ses sabots; puis s'approchant joyeusement de la barrière, elle tendit d'elle-même ses beaux flancs luisants à la selle, et ouvrit sa petite bouche au mors, comme si elle eût été aussi impatiente de me porter que j'étais impatient de la remonter moi-même. Nul ne sait, à moins d'avoir été bouvier, pasteur, soldat, chasseur ou solitaire comme moi, combien il y a d'amitié entre les animaux et leur maître. Ce monde est un océan de sympathies dont nous ne buvons qu'une goutte, quand nous pourrions en absorber des torrents. Depuis le cheval et le chien jusqu'à l'oiseau, et depuis l'oiseau jusqu'à l'insecte nous négligeons des milliers d'amis. Vous savez que moi je ne néglige pas ces amitiés, et que de la loge du dogue de basse-cour à l'étable du chevrier, et de l'étable au mur du jardin où je m'assieds au soleil, connu des souris, des belettes au museau flaireur, et des lézards, ces curieux qui sortent la tête de toutes les fentes, j'ai des relations et des sentiments partout. Honi soit qui mal y pense! je suis comme le vicaire de Goldsmith, j'aime à aimer.

Translate into French:

It is deemed by William of Malmsbury an extraordinary work of Providence, that the English should have given up all for lost after the battle of Hastings, where only a small though brave army had perished. It was indeed the conquest of a great kingdom by the prince of a single province, an event not easily paralleled, where the vanquished were little if at all, less courageous than their enemies, and where no domestic

factions exposed the country to an invader. Yet William was so advantageously situated, that his success seems neither unaccountable nor any matter of discredit to the English nation. The heir of the house of Cerdic had been already set aside at the election of Harold; and his youth, joined to a mediocrity of understanding which excited neither esteem nor fear, gave no encouragement to the scheme of placing him upon the throne in those moments of imminent peril which followed the battle of Hastings. England was peculiarly destitute of great men. The weak reigns of Ethelred and Edward had rendered the government a mere oligarchy, and reduced the nobility into the state of retainers to a few leading houses, the representatives of which were every way unequal to meet such an enemy as the Duke of Normandy.

FACTORY INSPECTOR.

STATICS.

Time allowed, 3 hours.

1. Define the terms component force and resultant force.

   Explain what is meant by the transmission of force, and state the use which is made of this principle in Statics.

2. Enunciate the triangle of forces.

   A force of $P\sqrt{3}$ lbs. is to be resolved into two forces, one of which is to be P. lbs. and the other is to make an angle of 30° with the given force.

   What is the magnitude of this latter force?

3. Prove the parallelogram of forces for the magnitude of the resultant, assuming it to hold for the direction.

   Find the resultant of two forces of 13 lbs. each, represented by AB and AC; BC representing a force of 10 lbs.

4. If the direction and magnitude of the resultant of two forces, the directions of which are inclined at a given obtuse angle, be known, prove that one of the forces is greatest when the direction of the other is perpendicular to that of the resultant.

5. Assuming that wind and water can exert no force except perpendicularly to the surface of a sail or ship, explain how a vessel can be made to sail in a direction nearly contrary to the wind. Illustrate by a figure. Explain the action of the screw in propelling a vessel.

6. Show how the centre of gravity of a body may be found when the positions of the centres of gravity of portions of the body of known weight are given.

   Find the centres of gravity of the area, and of the perimeter of a plane triangle.

   Find the centre of gravity of six equal weights placed at the angular points and at the middle points of the sides of a triangle.

7. Find the ratio of the power to the weight,—

   1st. On a single moveable pulley;

   2d. On a wheel and axle.

   A man weighing 11 stone is suspended by a rope passing round the axle, and pulls himself up by another rope passing round the wheel. If the radii of the wheel and axle be 8 inches and 3 inches respectively, find the force which he must exert supposing the ropes to be parallel and their thicknesses neglected.

FACTORY INSPECTOR.

8. State the laws of statical friction; and show how the coefficient of friction, for two substances, may be practically determined.

Find the direction and magnitude of the least force which will move a given weight on a rough horizontal plane.

DYNAMICS.

Time allowed, 3 hours.

1. State and explain the first law of motion. Explain how the action of walking or running is started and maintained, and why it is difficult, in general, to run rapidly round a small circle.

2. A weight of 20 tons is pulled up a smooth inclined plane 100 yards in length inclined to the horizon at an angle of 30°. If the motion be uniform, find the work done.

3. Explain how velocities are compounded.

A cricket ball is moving in the line of wickets at the rate of 33 feet per second, and is struck by a blow which would, if the ball had been at rest, have sent it with the velocity of 30 miles an hour in a direction at right angles to the line of wickets. Find the velocity with which the ball leaves the bat and the part of the field towards which it is sent. Illustrate by a diagram.

4. A particle moves from rest under the action of a force which is constant in magnitude and direction; prove that the space s described in the time t, and the velocity acquired are given by the equations—

$$s=\tfrac{1}{2}ft^2, \text{ and } v=ft,$$

f being the acceleration due to the force.

If a body be thrown up with a velocity of 40 feet per second, after what time will it be at a height of 16 feet, gravity being 32 ?

5. Define acceleration, constant and variable. The velocity of a railway train increases uniformly from 30 to 40 miles an hour in 10 minutes; compare its acceleration with that of gravity, assumed to be 32.

6. Show that the times of sliding down all chords of a vertical circle from its highest point are the same.

7. Find the acceleration when two unequal weights are attached to a string passing over a smooth pulley.

Describe Attwood's machine, and explain how it may be demonstrated by means of it (1) that gravity is a constant force, (2) that its magnitude is nearly 32.

8. Find the path of a projectile in a vacuum and its range on the horizontal plane through the point of projection.

9. Two elastic balls moving with given velocities impinge directly on each other; determine their velocities after impact.

Three balls A, B, C, are at rest with their centres in the same straight line; if A be made to impinge directly upon B, prove that the velocity acquired by C will be greatest when the masses of the balls are in geometric progression.

FACTORY INSPECTOR.

10. Describe, in general terms, the effect produced by the earth's rotation, (1) on bodies falling from a great height, (2) on projectiles, (3) on the plane of oscillation of a pendulum; considering separately the three cases in which the pendulum is suspended at the pole, the equator, and some intermediate locality.

CADETS, ROYAL IRISH CONSTABULARY.

II.—PAPERS SET AT AN EXAMINATION OF CANDIDATES NOMINATED TO COMPETE FOR CADETSHIPS IN THE ROYAL IRISH CONSTABULARY.

PASSAGES FOR DICTATION.

Similar to those set to candidates for an Inspectorship of Factories. *See* page 472.

COPYING.

Similar to that set to the candidates for an Inspectorship of Factories. *See* page 473.

ARITHMETIC.

Time allowed, $2\frac{1}{2}$ hours.

N.B.—*You are particularly recommended to answer the questions in the order in which they are set; not omitting any one unless you are unable to do it.*

1. Reduce 3 acres 5 roods 8 yards 3 feet to square inches.
2. If 3 qrs. 27 lbs. 8 ozs. of grain cost £17. 8*s*. $9\frac{3}{4}d$., how much can be bought for £8,737. 15*s*. $0\frac{3}{4}d$.?
3. Find (by Practice) the dividend on £278. at 18*s*. $9\frac{1}{2}d$. in the pound.
4. Find the simple interest on £903. 17*s*. $0\frac{1}{2}d$. for $7\frac{3}{4}$ years at 5 per cent. per annum (neglecting fractions of a penny).

---

5. Add together $\frac{1}{19}$, $\frac{2}{76}$, $\frac{50}{57}$, and $2\frac{3}{114}$.
6. Subtract $11\frac{9}{23}$ from $13\frac{45}{46}$.
7. Multiply $10\frac{3}{11}$ by $1\frac{107}{113}$.
8. Divide $6\frac{5}{12}$ by $2\frac{1}{3}$.

CADETS, ROYAL IRISH CONSTABULARY.

9. Add together 1234·5678, 876·543, ·001324, and 1·1928374.
10. Subtract 99·132546 from 101·12131.
11. Multiply 193·401 by ·0563.
12. Divide 813·502 by ·0012 to three places of decimals.
13. Reduce ·001435 of an acre to square yards and the decimal of a square yard.

---

14. In 113,422 grains troy how many lbs., ozs., dwts., &c.?
15. If 1 rood 8 poles 1 yard 4 feet of land cost £981. 1*s.* 6*d.*, how much money must be given for 5 poles 30 yards 4 feet?
16. Find (by Practice) the price of 1 lb. 13 dwts. 8 grs. at £13. 17*s.* 6*d.* an ounce.
17. Find the amount of £5,678. for 3 years at 7 per cent. compound interest (neglecting fractions of a penny).

---

18. Add together $5\frac{1}{3}$, $\frac{6}{7}$, $3\frac{1}{2}$, and $\frac{15}{17}$.
19. Subtract $13\frac{1}{14}$ from $14\frac{1}{113}$.
20. Multiply together $11\frac{1}{12}$, $1\frac{5}{7}$, $\frac{1}{19}$, and 3.
21. Divide $10\frac{13}{14}$ by $2\frac{3}{7}$.

---

22. Add together ·0013, 1·010305, 777·8989, and ·235601.
23. Subtract 101·3579 from 202·01.
24. Multiply 16·5634 by 1·00132.
25. Divide 19·69714 by 1301.
26. Find the value of ·003456 of a mile in feet and the decimal of a foot.

---

27. In 5,063,172 pints how many bushels, pecks, gallons, &c.?
28. If 19 men can survey 140 miles in 52 days, how many miles can 13 survey in 57 days.
29. Find (by Practice) the price of 1230 articles at £3. 17*s.* $10\frac{3}{4}$*d.* apiece.
30. In how many years will £615. amount to £2,152. 10*s.* at $7\frac{1}{2}$ per cent.?

---

31. Add together $\frac{3}{7}$, $\frac{13}{42}$, $13\frac{19}{126}$, and $2\frac{1}{3}$.
32. Subtract $12\frac{13}{14}$ from $15\frac{15}{16}$.
33. Multiply together $\frac{11}{12}$, $7\frac{1}{8}$, $\frac{13}{67}$, and $1\frac{5}{6}$.
34. Divide $8\frac{1}{17}$ by $3\frac{4}{51}$.

---

35. Add together 131·121, 2·987463, ·00101, and 61·305699.
36. Subtract 300·15181 from 301·134501.
37. Multiply 70·563 by ·01036.
38. Divide 15·031 by 3·6015 to three places of decimals.
39. Give the value of 5·1981 of 15*s.* $6\frac{3}{4}$*d.* in pence and the decimal of a penny.

ADDITION.

CADETS, ROYAL IRISH CONSTABULARY.

Add up as many of the columns as you can in the time allowed (½ an hour), placing the answers in the spaces below the columns.

You are not required to *copy out* the sums, but to write the answers in the *spaces* below each column.

N.B.—*You had better occupy the whole time allowed.*
No additional marks will be given for rapidity.

£	s.	d.	£	s.	d.	£	s.	d.
8346	10	3	8797	7	7	873	2	1
189603	2	5	859276	3	8	29200	7	9
23297	12	5	349	13	5	95016	18	2
86631	7	7	786178	2	4	79634	11	8
65211	6	8	538097	1	2	302475	11	6
984917	10	8	267873	13	2	69263	15	4
815975	16	11	298772	2	6	89768	12	11
373041	2	7	358756	3	7	23276	5	9
465983	17	11	817637	6	9	22896	10	10
840732	9	2	314197	6	5	83946	7	1
74573	2	4	97239	2	5	98290	2	10
891174	2	10	209172	1	9	566984	5	4
876541	2	11	642935	8	1	318019	3	8
147732	6	2	31847	1	2	351867	4	11
426409	12	8	90574	2	1	385471	2	11
361211	6	7	381397	7	1	36197	11	7
34232	1	11	24761	18	4	631902	8	6
99374	5	7	476239	15	7	621140	15	6
19109	19	10	744032	8	6	476385	16	3

Answer

£	s.	d.	£	s.	d.	£	s.	d.
23109	19	10	11835	0	3	234106	7	8
587346	11	3	29215	9	5	398136	2	6
91105	2	1	88594	11	2	291414	12	4
39142	5	2	11835	0	3	58964	17	2
753276	5	9	23109	19	10	52350	11	1
403750	5	8	313257	8	11	376514	10	5
94636	1	1	102376	18	3	810732	17	1
76899	13	7	173617	6	8	310397	8	7
6679	14	5	673159	0	1	231485	15	5
166197	11	7	231287	14	7	32752	15	3
675940	18	2	44687	17	7	239763	2	1
16391	1	4	156917	11	9	37	9	1
228416	9	10	612356	1	2	299653	1	8
435647	11	4	112935	8	1	31140	15	6
16391	1	4	38764	13	7	83215	9	5
803421	3	6	691040	3	7	364976	13	1
141263	9	5	274032	12	1	63276	5	9
813214	2	6	8724	2	10	71425	3	3
310397	8	7	34728	12	6	93198	10	8

Answer

CADETS, ROYAL IRISH CONSTABULARY.

£	s.	d.	£	s.	d.	£	s.	d.
769276	3	8	439250	13	2	531397	7	1
74321	18	9	352376	0	9	131528	3	6
181528	3	6	236	3	1	810563	4	1
810327	4	4	6781	2	2	586704	3	10
15691	13	9	58374	10	7	134139	8	5
249837	10	5	12844	9	8	191880	19	2
19284	10	2	106747	18	3	41752	15	3
708416	19	7	65416	18	2	125176	13	7
107319	8	4	326408	13	10	610732	17	1
20242	0	7	274086	3	3	19631	7	7
34917	10	8	789409	1	0	783130	2	4
43109	19	10	234526	1	1	734321	18	9
106408	13	10	107568	3	11	836	2	7
4636	11	4	32752	15	3	234526	1	1
106408	13	10	861014	8	8	205867	14	1
41220	4	9	42631	10	4	63177	2	5
24856	17	4	614275	8	2	17218	9	6
371140	15	6	209945	2	11	41047	3	2
373041	2	7	4752	1	8	82971	3	2

Answer

£	s.	d.	£	s.	d.	£	s.	d.
98132	1	6	719058	15	1	692765	1	2
38839	7	1	234016	3	9	532121	7	6
102376	17	1	231902	7	6	227	18	9
563429	13	4	436197	11	7	102276	3	5
93756	2	2	68749	11	4	106549	3	3
791023	13	8	108106	2	2	379246	10	8
89318	2	6	254321	18	9	417116	15	7
905002	0	7	87163	9	11	125643	9	9
756409	12	8	416109	8	9	925978	11	1
10919	1	5	739369	10	2	58209	1	2
156917	11	9	268549	16	7	649603	2	5
60616	3	7	21595	3	8	81906	10	7
71476	3	9	935112	1	8	76752	15	3
290374	10	7	196408	13	10	106073	9	7
711015	0	1	38749	15	2	214376	15	10
3481	16	8	941013	1	4	56379	13	2
105217	3	7	577667	13	11	659276	3	8
4785	13	11	83649	2	7	10847	7	7
761089	15	9	514376	15	10	463487	1	10

Answer

CADETS, ROYAL IRISH CONSTABULARY.

SUBJECTS FOR ENGLISH COMPOSITION.

Time allowed, 2½ hours.

In this Exercise attention should be paid to handwriting, spelling, punctuation, grammar, and style.

Cruelty to animals in field sports.

Or,

"Writings by which the writer gains a living are not the writings which themselves live." Discuss this.

Or,

"For forms of government let fools contest ;
Whate'er is best administered is best."

The Composition should fill not less than two folio pages.

PRÉCIS.

For instructions, *see* page 474.

The paper set was about ten pages of a copy of Correspondence respecting the Affairs of South Africa.

GEOGRAPHY.

(Especially of the British Isles.)

Time allowed, 3 hours.

1. Explain the meaning of the terms Equator and Ecliptic.
2. Enumerate in order, from North to South, the chief arms of the sea on the Western Coast of Ireland ; and describe the geographical features of one or more of them in detail.
3. Mention the most important of the Islands, besides Great Britain and Ireland, that constitute "the British Isles." Indicate their position and for what they are remarkable.
4. Enumerate the chief river-mouths and seaports on the coast of France, with the Departments, or the Provinces, in which they occur.
5. Compare the bog-lands of Ireland with the fen-lands of England, as to their relative position, extent, and probable origin.
6. Give the names and position of the chief Islands of the Mediterranean, and a particular description of one of them.
7. Enumerate the more important of the British colonies and possessions abroad, with some particulars as to their extent and products.
8. Give some account of the Climate of Ireland, and compare it with that of England and Wales.

CADETS, ROYAL IRISH CONSTABULARY.

9. Describe the situation of the following places, and state for what they are remarkable: *Valetta, Runymede, Herat, Nicosia, Dundee, Port Said, Wiesbaden, Belfort, Bucharest, Omagh, Gottingen, Avoca, Bolton, Tashkand, Mallow, Lausanne, Kiev, Tuam, Orenburg, Orleans.*

N.B.—*In all your exercises attention should be paid to orthography, handwriting, punctuation, grammar, and correctness of expression.*

BRITISH HISTORY.

Time allowed, 3 hours.

1. What were the chief means employed by legislators in the Saxon times (A.D. 449 to A.D. 1066) for promoting internal order and personal security?
2. Give some account of the early conflicts between the kings of the West Saxons and the British princes reigning in Wales or the west of England.
3. Describe the descents of the Danes or Ostmen on the Irish coasts in the 10th and 11th centuries, and also the measures taken to resist them.
4. In what respects was the army commanded by Edward III. at Creçy superior in composition as a military force to the French army which it defeated?
5. Describe the chief measures taken by Charles I. and his Parliament, when the struggle between them was impending, to bring under the effective control of each side the military and financial resources of the country.
6. State the substance of the Habeas Corpus Act of 1679, and show how its provisions were generally anticipated by certain clauses in Magna Charta.
7. Name three occasions on which the Habeas Corpus Act has been suspended, and state the grounds of policy and expediency on which the Government of the day justified its demand of such suspension in each case.
8. Sketch the progress of the East India Company, from the date of its formation to the end of the Seven Years' War.
9. Give an account of the differences between this country and the American colonies which preceded and caused the War of Independence.
10. Write short lives of the following persons: William the Conqueror, Thomas à Becket, Lord Clarendon the historian, Daniel O'Connell.

N.B.—*In all your exercises attention should be paid to orthography, handwriting, punctuation, grammar, and correctness of expression.*

LATIN.

CADETS, ROYAL IRISH CONSTABULARY.

Time allowed, 3 hours.

Translate into English :

Non mea culpa sæpe ad vos mitto, Patres conscripti ; sed vis Jugurthæ subigit, quem tanta lubido exstinguendi me invasit, ut neque vos neque deos immortales in animo habeat ; sanguinem meum, quam omnia, malit. Itaque quintum jam mensem, socius et amicus populi Romani, armis obsessus teneor : neque mihi Micipsæ patris mei beneficia neque vestra decreta auxiliantur : ferro an fame acrius urgear, incertus sum. Jugurtha initio occidit Hiempsalem fratrem meum : deinde patrio regno me expulit. Nunc regnum vestrum armis tenet : me, quem vos imperatorem Numidis posuistis, clausum obsidet : legatorum verba quanti fecerit, pericula mea declarant. Quid est reliquum, nisi vis vestra, quo moveri possit ? Nam ego quidem vellem, et hæc, quæ scribo, et illa, quæ antea in Senatu questus sum, vana forent potius, quam miseria mea fidem verbis faceret. Sed non jam mortem neque ærumnas, tantummodo inimici imperium et cruciatus corporis deprecor. Regno Numidiæ, quod vestrum est, uti lubet, consulite : me ex manibus impiis eripite, per majestatem imperii, per amicitiæ fidem, si ulla apud vos memoria remanet avi mei Masinissæ.

Illa dies hæc est, qua te celebrare poetæ,—
  Si modo non fallunt tempora—Bacche, solent,
Festaque odoratis innectunt tempora sertis,
  Et dicunt laudes ad tua vina tuas.
Inter quos, memini, dum me mea fata sinebant,
  Non invisa tibi pars ego sæpe fui,
Quem nunc suppositum stellis Cynosuridos Ursæ
  Juncta tenet crudis Sarmatis ora Getis.
Quique prius mollem vacuamque laboribus egi
  In studiis vitam Pieridumque choro,
Nunc procul a patria Geticis circumsonor armis,
  Multa prius pelago multaque passus humo.
Sive mihi casus, sive hoc dedit ira deorum,
  Nubila nascenti seu mihi Parca fuit,
Tu tamen e sacris hederæ cultoribus unum
  Numine debueras sustinuisse tuo.

Tanslate into Latin :

Immediately after the defeat of the Samnites, the Senate resolved to punish the Sabines for listening to the overtures of the Samnite chiefs at the beginning of the late war. The commander entrusted with the invasion of the country was Manius Curius Dentatus, a name which may be counted among the most illustrious in Roman history. He is said himself to have been of Sabine origin,—sprung from the Sabines of the lower country, no doubt, who had long been closely united with Rome. He lived, like the old plebeians, on his own farm, and himself shared with his men the labours of the field. It is said that on one occasion the Samnites sent messengers to tempt him with costly presents of gold ; the messengers found him preparing his own dinner at the fire ; and when he had heard their business, he pointed to his rude meal, and said : "Leave me my earthen pans, and let those who use gold be my subjects."

CADETS, ROYAL IRISH CONSTABULARY.

CRIMINAL LAW.

Time allowed, 3 hours.

1. What is necessary to make a commitment to prison lawful? What are the remedies for illegal imprisonment?
2. What is the extent of the royal prerogative as to persons entering or leaving the country? Is any criminal liability incurred for acting contrary to the royal commands in such matters?
3. Is there any limit to the right of the subject to carry arms?
4. What is the legal presumption as to the guilt of homicide? What circumstances may be proved that will rebut such presumption; and on whom does the burden of proving such circumstances fall?
5. Explain what amounts to a burglarious entry.
6. Explain and illustrate the distinctions between robbery, larceny, larceny by a bailee, embezzlement, and obtaining money by false pretences.
7. What facts must be proved to establish the crime of perjury?
8. Explain the nature of the following offences:—
   1st. Administering unlawful oaths.
   2nd. Being engaged in illegal societies.
   How must criminal proceedings be taken in the latter case?
9. State the principal provisions of the criminal law relating to libels.
10. What is a criminal information? Describe the procedure under one.

LAW OF EVIDENCE.

Time allowed, 3 hours.

1. Explain what is meant by oral evidence being *direct*.
2. When is a *recital* deemed to be sufficient proof of a fact?
3. What must be proved in order to defeat the effect of a foreign judgment in this country?
4. In what cases is evidence of *opinion* admissible as relevant?
5. To what extent is a witness protected by the rule that he is not bound to criminate himself?
6. How far are professional communications with a legal adviser privileged?
7. When will an inducement offered to a person to confess exclude his statement?
8. In what ways may the credibility of a witness be impeached?
9. When is a witness permitted to refresh his memory by reference to a written paper?
10. What remedy is there when evidence has been improperly received or rejected in a criminal trial?

III.—PAPERS SET AT AN EXAMINATION OF CANDIDATES NOMINATED TO COMPETE FOR INSPECTORSHIPS OF NATIONAL SCHOOLS, IRELAND.

*** For subjects of Examination, *see* page 95.

DICTATION.

Similar to that set to candidates for Factory Inspectorships, *see* p. 472.

EXERCISE TO TEST HANDWRITING.

Similar to that set to candidates for Factory Inspectorships, *see* p. 473.

ARITHMETIC.

Similar to that set to Constabulary Cadets, *see* p. 483.

ADDITION.

Similar to that set to Constabulary Cadets, *see* p. 485.

HIGHER ARITHMETIC.

Similar to that set for India Forest Service, *see* p. 448.

ENGLISH COMPOSITION.

Time allowed, 2 hours.

"Some, to whom heaven in wit has been profuse,
Want as much more to turn it to its use;
For wit and judgment often are at strife,
Though meant each other's aid, like man and wife."

Or,

Compare the characters of a maritime and a continental nation.

The composition should fill not less than two folio pages.

INSPECTORS, NATIONAL SCHOOLS, IRELAND.

ENGLISH GRAMMAR AND LANGUAGE.

Time allowed, 3 hours.

1. How is the English Language related to other languages?
2. From what quarters, and at what periods, has the vocabulary of the English Language received additions? What are the relative proportions in which they now make up the Language of the present day?
3. What is the proportion of Sounds to Letters in English? State generally the defects of the English Alphabet. Tabulate the Consonant and Vowel Sounds respectively.
4. What traces are still extant of older modes of marking the Feminine?
5. What is the meaning of the word Apostrophe? What function does it discharge in connexion with the Possessive case?
6. Discuss the meaning of the italicised portions of the following words:—*Un*truth. Sound. *Mis*deed. *For*swear. *Fore*fend. *Fore*go. *For*give. Pea*se*. Man*ly*. Bishop*rick*. For*m*er. Ea*ch*.
7. How are Adjectives compared in English? State the principal exceptions of irregular comparisons, and explain their formation.
8. Explain the origin of the following Pronouns:—*What*. *None*. *Him*. *That*. *Which*. *Them*. *Ours*. *Every*.
9. In how many different ways are Verbs classified? What is the true significance of the Infinitive Mood?
10. Give examples from English to show that Adverbs are presumably cases of Nouns. Would the same remark apply to Prepositions and Conjunctions?
11. Give an Analysis of the following sentence:—

> But yesterday the word of Cæsar might
> Have stood against the world; now lies he there,
> And none so poor to do him reverence.

EUCLID. (OBLIGATORY.)

(1st, 2nd, 3rd, and 6th Books.)

Time allowed, 3 hours.

1. If two angles of a triangle be equal to each other, the sides also which subtend the equal angles shall be equal to one another.
2. If a side of a triangle be produced, the exterior angle is equal to the two interior and opposite angles, and the three interior angles of every triangle are together equal to two right angles.

   ABC is a right-angled triangle, having A a right angle. If AD be drawn bisecting the right angle, and AE bisecting the base, show that the angle DAE is equal to half the difference of B and C.
3. If the square described upon one of the sides of a triangle be equal to the squares described on the other two sides of it, the angle contained by these two sides is a right angle.
4. If a straight line be divided into two parts, the square on the whole line is equal to the squares on the two parts together with twice the rectangle contained by the parts.

Show that the sum of the squares on the sides of the figure formed by joining the middle points of the sides of a parallelogram is equal to half the sum of the squares on the sides of the parallelogram.

5. Show how to find the centre of a given circle.

   If the perpendiculars drawn through the middle points of the sides of a rectilineal figure meet in a point, show that the angular points of the figure lie on a circle.

6. Equal straight lines in a circle are equally distant from the centre; and, conversely, those which are equally distant from the centre are equal to one another.

7. In a circle, the angle in a semicircle is a right angle, but the angle in a segment greater than a semicircle is less than a right angle, and the angle in a segment less than a semicircle is greater than a right angle.

8. The sides about the equal angles of equiangular triangles are proportionals.

   Two circles touch one another. Show that all chords passing through the point of contact, and terminated by the circles, are divided in the same ratio at that point.

9. The rectangle contained by the diagonals of a quadrilateral inscribed in a circle is equal to the sum of the rectangles contained by its opposite sides.

ALGEBRA. (OBLIGATORY.)

Time allowed, 3 hours.

1. Find the value of—

$$\frac{a^3+a^2-a-1}{b^3-b^2+b-1} \text{ when } a=2,\ b=\tfrac{1}{2},$$

and the value of $(1+a)^{\frac{1}{2}} \times (1-b)^{-\frac{1}{2}}$ when $a=\frac{1}{5}, b=\frac{1}{6}$.

2. Divide $6x^3+x^2+x+2$ by $2x^2-x+1$.

   Find the first four terms in the quotient obtained when $1+x$ is divided by $1-2x$.

3. Simply the expressions—

   (1.) $(16a^6b^2)^{\frac{1}{2}} \times (a^{\frac{1}{2}}b^{\frac{1}{2}})^2 \times (2a^{\frac{1}{2}}b)^{\frac{1}{2}}$.

   (2.) $(1+a+b)^3+(1+a-b)^3+(1-a+b)^3+(1-a-b)^3$.

4. Multiply $a^3b^{-3}-ab^{-1}+a^{-1}b-a^{-3}b^3$ by $ab^{-1}+a^{-1}b$, and divide $(x^2y^{mn})^{\frac{1}{m}}$ by $(x^{\frac{1}{m}}y^2)^{mn}$.

5. Reduce the fraction $\frac{3x^3-x^2-x-1}{3x^3-4x^2-x+2}$ to its lowest terms.

6. Find the least common multiple of—

   (1.) $7a^3bx^2$, $3ax^3$, $6ab^3$.

   (2.) $3x^2-x-2$, $2x^2+x-3$.

7. Find the value of a which will make $x^4-x^3-x^2-ax$ divisible without remainder by x^2+x.

INSPECTORS, NATIONAL SCHOOLS, IRELAND.

8. Solve the equations—

(1.) $1-\frac{2}{x}-\frac{3}{2x}=\frac{4}{3x}$.

(2.) $\frac{x}{1-x}+\frac{1-2x}{2-x}=1$.

9. Extract the square roots of—

(1.) $9-4\sqrt{2}$.

(2.) $x^2-6x+13-12x^{-1}+4x^{-2}$.

10. Solve the equations—

(1.) $\sqrt{x}-\sqrt{1+x}=\frac{1}{\sqrt{x}}$.

(2.) $\frac{1-ax}{1+ax}\times\frac{a-x}{a+x}=1$.

(3.) $x^2+xy=32$, $y^2-xy=18$.

11. A train is timed to travel between two stations, A and C, at 45 miles an hour. It travels from A to an intermediate station, B, at the rate of 40 miles an hour, and the speed is then increased to 50 miles an hour. The train arrives punctually at the time appointed. Compare the distances of B and C from A.

TRIGONOMETRY (OBLIGATORY).

(To solution of plane triangles.)

Time allowed, 3 hours.

1. Obtain formulæ to determine the number of degrees and grades respectively in an angle whose circular measure is given.
   Express in each of the three systems of units the vertical angle of a triangle having each of the angles at its base double the angle at the vertex.
2. Express the other trigonometrical ratios of an angle in terms of its sine.
   Find the sine of 30°, and deduce the sine and cosine of 210°.
3. Trace the changes in sign and magnitude of sec θ as θ changes from 90° to 180°.
4. Prove that $\tan(A+B)=\frac{\tan A+\tan B}{1-\tan A\tan B}$,

   and that $\tan^2 A=\frac{3-\tan(60°+A)\cot(30°+A)}{1-3\tan(60°+A)\cot(30°+A)}$.
5. Prove that—

   (1.) $\text{Sec}^2 A-\text{cosec}^2 A=\tan^2 A-\cot^2 A$.

   (2.) $\text{Sec } 2A-\tan 2A=\frac{1-\sin 2A}{1-2\sin^2 A}$.

   (3.) $\frac{\text{Sin}(A+B)}{\text{Sin}(A-B)}-\frac{\sin(A-B)}{\sin(A+B)}=\frac{2\sin 2A\sin 2B}{\sin^2 A-\sin^2 B}$.

6. Solve the equation—

$$\cos 2\theta\,(1+\tan^2\theta)+2=0.$$

7. If $A+B+C=90°$, show that—

(1.) $\text{Cot } A+\cot B+\cot C=\cot A\,.\cot B\,.\cot C.$

(2.) $\dfrac{\text{Cot } B}{\text{Cot } C}=\dfrac{\cos^2 A+\cos^2 B-\cos^2 C}{\cos^2 A+\cos^2 C-\cos^2 B}.$

8. Find an expression for the sine of an angle of a triangle in terms of the sides; and show that each side is proportional to the sine of the opposite angle.
9. An equilateral triangle and an isosceles right-angled triangle stand on the same base. Show that their altitudes are as $\sqrt{3}:1$.
10. Prove that $\log a^m=m\log a$.
Given that $\log 35=1\cdot5440680$ and $\log 7=\cdot8450980$, find $\log \cdot032$ and $\log 6250$.
11. In a triangle ABC, find the angles A and B, having given $a=8$, $c=9$, $C=60°$,
$\log 8=\cdot9030900$, $\log 9=\cdot9542426$,
L sin 51° 15′ $=9\cdot8863771$,
L sin 51° 16′ $=9\cdot8863786$.

GEOGRAPHY (OBLIGATORY).

(Sullivan's Geography Generalised.)

Time allowed, 3 hours.

1. Write a short account of the general distribution of land and water on the earth, and draw sketch-maps of the land and water hemisphere respectively.
2. Mention some of the methods of determining the longitude of a place. When it is noon at Greenwich what time is it at Nova Scotia, San Francisco, Behring Straits, Nankin, and Khiva?
3. Mention the principal winds and ocean currents that would be encountered in a voyage from Plymouth round the Cape of Good Hope to Hong Kong. Account for the excessive rainfall on the west coast of Norway and in Eastern Bengal.
4. Contrast the fauna of the Old and New World, and mention any points in which that of Australia is peculiar?
5. Describe as fully as you can, with the help of a map, any county of Ireland.
6. Draw a map of Russia *or* of Italy, showing the chief mountain chains, the rivers, and six important towns. Add a note giving particulars regarding the towns which you insert in your map.
7. Draw a map showing the relative positions of Vienna, Munich, Dresden, Warsaw, Berlin, Hanover, and Strasburg, and mark the position of any important mountains, rivers, or political divisions which fall within the limits of such a map.
8. Where are Aix la Chapelle, Antigua, Cagliari, Darien, Ecuador, Formosa, Gozo, Haarlem, Irkutsk, Katmandoo, Kronstadt, Labuan, Leh, Maldive, Mantua, Oviedo, Sourabaya, Talavera, Tokay, and Yucatan, and for what are any of them remarkable?

INSPECTORS, NATIONAL SCHOOLS, IRELAND.

9. Describe the course of two of the following rivers: Ganges, Amazon, Nile, and Euphrates.
10. Draw a map and give a short account of either South America or the North Polar regions.

N.B.—*In all your exercises attention should be paid to orthography, handwriting, punctuation, grammar, and correctness of expression.*

PHYSICAL SCIENCE.

(Obligatory: Mechanics, with any two of the other subjects.)

Time allowed, 3 hours.

MECHANICS.

1. Enunciate the parallelogram of forces, and assuming its truth for the direction of the resultant prove it also for the magnitude.

   Four forces are represented in magnitude and direction by the perpendiculars from a point P on the sides of a square: prove that their resultant is represented in magnitude and direction by twice PO, where O is the intersection of the diagonals of the square.
2. Find the resultant of two parallel forces in the same direction.

   A man seated in a boat with its stern towards the shore pulls the handle of each of a pair of sculls with the force P. Find the force with which a man on the shore must pull a horizontal chain fastened to the stern in order to keep the boat at rest, the distance from the rowlock to the blade being m times that from the handle to the rowlock.
3. Find the centre of gravity of any system of heavy particles.

   If four equal weights be placed at the angles of a quadrilateral, prove that their centre of gravity coincides with that of the parallelogram formed by joining the middle points of the rods.
4. If three forces in one plane keep a point at rest, prove that they must either be parallel or else meet in a point.
5. Show how to graduate the common steelyard.

   If the sliding weight be 10 lbs., and the points of graduation for one stone and three stones be $3\frac{1}{2}$ inches apart, prove that the body to be weighed must be suspended from a point $1\frac{1}{4}$ inches from the fulcrum.
6. State how velocities are measured, also how they are compounded.

   Two trains start from the junction O along the lines of railway OA and OB with the same velocity, V; prove that their relative velocity is—

$$2V \sin \frac{AOB}{2}.$$

7. Find the space described from rest in the time t by a particle moving with uniform acceleration.

   A stone dropped from the top of a tower falls through $\frac{16}{25}$ of the height in the last second of its fall. Find the height, g being 32.

8. The path of a projectile is a parabola.

If the velocity and angles of projection be v and α respectively, prove that after the time $\frac{v}{g \sin \alpha}$ the projectile will be moving at right angles to the direction of projection.

9. Find the acceleration when two unequal weights are connected by a string which passes over a smooth pulley.

If one of the weights be twice as great as the other, find their relative velocity at the end of 3 seconds.

HYDROSTATICS.

10. Prove that the difference of pressures at any two points in a mass of water at rest is proportional to the vertical distance between the points.

11. Find the total pressure on any surface in contact with a heavy liquid at rest.

A box on a rectangular base and with vertical sides contains equal volumes of two liquids, the specific gravity of one of them being twice that of the other. Find the pressure on one of the sides (1) when the lighter fluid floats on the heavier; (2) when the fluids are completely mixed.

12. Find the conditions of equilibrium of a body floating in water.

If the water be contained in a cylindrical vessel with vertical axis and transverse section A, and if the floating body be another cylinder with transverse section B, prove that when the latter is depressed from its position of equilibrium through a distance c the water rises through the distance $\frac{B}{A-B} c$, and that the common centre of gravity of the floating body and contained water rises through the distance $\frac{B}{A-B} \cdot \frac{c^2}{2d}$, where d is the height of the plane of flotation above the base of the vessel.

13. Describe the construction and mode of use of the common hydrometer.

PNEUMATICS.

14. Write down the equation between pressure, density, and temperature, in the case of a perfect gas.

The air in a spherical globe one foot in diameter is compressed into a smaller globe of six inches diameter while the temperature is raised by 60° Fahrenheit. Find the proportionate increase of elastic force, if air expands $\frac{1}{273}$ of its bulk, for every degree of Centigrade.

15. State the laws which regulate the pressure of moist air.

A boiler is $\frac{3}{4}$ full of water, and $\frac{1}{4}$ of air and steam. Water whose volume is $\frac{1}{8}$ of the boiler is pumped in, the temperature remaining unaltered, and it is found that the pressure on the safety valve is thereby increased by $\frac{1}{8}$th of its original value; prove that the pressure of the steam was, originally, four times that of the air.

16. Explain the construction and use of the syphon.

INSPECTORS, NATIONAL SCHOOLS, IRELAND.

17. Explain the construction and action of the common pump.
If the volumes of the cylinder and suction pipe be equal, but the transverse section of the former double that of the latter, find how high the water will rise at the first stroke, the height of the water barometer being h.

OPTICS.

18. If a ray of light be reflected once by each of two plane surfaces in a plane perpendicular to their line of intersection, prove that the deviation will be twice the angle between the surfaces.
19. Diverging rays are incident upon a convex spherical reflector; find the geometrical focus.
If a circular arc be placed before such a reflector so as to be concentric with it, prove that the image will be a similar and concentric arc.
20. Find the geometrical focus after refraction through a convex lens.
Explain a practical method of determining the focal length of such a lens.
21. Describe Ramsden's eye-piece, and trace the course of a pencil of rays from a distant point to the eye of an observer through an astronomical telescope furnished with such an eye-piece.
What modification in the adjustment of such an instrument is required for a short-sighted person?

LATIN.

(Candidates are required to pass in two of the following languages,—Latin, Greek, French.)

[Livy, Books 1, 2, 3; Sallust; Virgil, Eneid, Books 1, 2, 3; Horace, Odes.]

Time allowed, 3½ hours.

Translate into English one of the following pieces of Sallust:

Namque duobus senati decretis ex tanta multitudine neque præmio inductus conjurationem patefecerat neque ex castris Catilinæ quisquam omnium discesserat: tanta vis morbi erat, quæ uti tabes plerosque civium animos invaserat. Neque solum illis aliena mens erat, qui conscii conjurationis fuerant, set omnino cuncta plebes novarum rerum studio Catilinæ incepta probabat. Id adeo more suo videbatur facere. Nam semper in civitate, quibus opes nullæ sunt, bonis invident malos extollunt, vetera odere nova exoptant, odia suarum rerum mutari omnia student, turba atque seditionibus sine cura aluntur, quoniam egestas facile habetur sine damno. Set urbana plebes, ea vero præceps erat de multis caussis. Primum omnium, qui ubique probro atque petulantia maxume præstabant, item alii per dedecora patrimoniis amissis, postremo omnes quos flagitium aut facinus domo expulerat, ei Roman sicut in sentinam confluxerant.

SALLUST.

Quæso, reputate cum animis vostris, num id mutari melius sit, si quem ex illo globo nobilitatis ad hoc aut aliud tale negotium mittatis, hominem veteris prosapiæ ac multarum imaginum et nullius stipendi, scilicet ut in tanta re ignarus omnium trepidet festinet, sumat aliquem ex populo monitorem offici sui. Ita plerumque evenit, uti quem vos inperatorem jussistis, is sibi inperatorem alium quærat. Atque ego scio, Quirites, qui, postquam consules facti sunt, et acta majorum et Græcorum militaria præcepta legere cœperint: præposteri homines: nam gerere quam fieri tempore posterius, re atque usu prius est. Conparate nunc, Quirites, cum illorum superbia me hominem novom. Quæ illi audire aut legere solent, eorum partem vidi, alia egomet gessi: quæ illi litteris, ea ego militando didici. Nunc vos existumate facta an dicta pluris sint. Contemnunt novitatem meam, ego illorum ignaviam: mihi fortuna, illis probra obiciuntur. Quamquam ego naturam unam et communem omnium existumo, set fortissumum quemque generosissumum. Ac si jam ex patribus Albini aut Bestiæ quæri possit, mene an illos ex se gigni maluerint, quid responsuros creditis, nisi sese liberos quam optumos voluisse?

SALLUST.

Translate into English one of the following pieces of Livy:

Sibi ludis præsultatorem displicuisse: nisi magnifice instaurarentur ii ludi, periculum urbi fore. Iret, ea consulibus nuntiaret. Quanquam haud sane liber erat religione animus, verecundia tamen majestatis magistratuum timorem vicit, ne in ora hominum pro ludibrio abiret. Magno illi ea cunctatio stetit: filium namque intra paucos dies amisit. Cujus repentinæ cladis ne causa dubia esset, ægro animi eadem illa in somnis obversata species visa est rogare, Satin' magnam spreti numinis haberet mercedem? Majorem instare, ni eat propere, ac nuntiet consulibus. Jam præsentior res erat: cunctantem tamen se prolatantem ingens vis morbi adorta est debilitate subita. Tum enimvero deorum ira admonuit. Fessus igitur malis præteritis instantibusque, consilio propinquorum adhibito, quum visa atque audita, et obversatum totiens somno Jovem, minas irasque cœlestes, repræsentatas casibus suis, exposuisset; consensu inde haud dubio omnium, qui aderant, in forum ad consules lectica defertur.

LIVY.

Aucta civitate magnitudine urbis, formatis omnibus domi et ad belli et ad pacis usus, ne semper armis opes acquirerentur, consilio augere imperium conatus est; simul et aliquod addere urbi decus. Jam tum erat inclutum Dianæ Ephesiæ fanum: id communiter a civitatibus Asiæ factum fama ferebat. Quum consensum deosque consociatos laudaret mire Servius inter proceres Latinorum, cum quibus publice privatimque hospitia amicitiasque de industria junxerat; sæpe iterando eadem perpulit tandem, ut Romæ fanum Dianæ populi Latini cum populo Romano facerent. Ea erat confessio, caput rerum Romam esse, de quo totiens armis certatum fuerat. Id quanquam omissum jam ex omnium cura Latinorum, ob rem totiens infeliciter tentatam armis, videbatur; uni se ex Sabinis fors dare visa est privato consilio imperii recuperandi. Bos in Sabinis nata cuidam patrifamiliæ dicitur, miranda magnitudine ac specie. Fixa per multas ætates cornua in vestibulo templi Dianæ monumentum ei fuere miraculo. Habita, ut erat, res prodigii loco est: et cecinere vates, cujus civitatis eam cives Dianæ immolassent, ibi fore imperium; idque carmen pervenerat ad antistitem fani Dianæ.

LIVY.

INSPECTORS, NATIONAL SCHOOLS, IRELAND.

Translate into English:

Has autem terras Italique hanc litoris oram,
Proxima quæ nostri perfunditur æquoris æstu,
Effuge; cuncta malis habitantur mœnia Graiis.
Hic et Narycii posuerunt mœnia Locri,
Et Sallentinos obsedit milite campos
Lycitus Idomeneus; hic illa ducis Melibœi
Parva Philoctetæ subnixa Petelia muro.
Quin, ubi transmissæ steterint trans æquora classes,
Et, positis aris, jam vota in litore solves,
Purpureo velare comas adopertus amictu,
Ne qua inter sanctos ignes in honore deorum
Hostilis facies occurrat, et omina turbet.
Hunc socii morem sacrorum, hunc ipse teneto;
Hac casti maneant in relligione nepotes.
Ast, ubi digressum Siculæ te admoverit oræ
Ventus, et angusti rarescent claustra Pelori,
Læva tibi tellus, et longo læva petantur
Æquora circuitu; dextrum fuge litus et undas.
Hæc loca, vi quondam et vasta convulsa ruina,
(Tantum ævi longinqua valet mutare vetustas)
Dissiluisse ferunt, quum protinus utraque tellus
Una foret; venit medio vi pontus, et undis
Hesperium Siculo latus abscidit, arvaque et urbes
Litore diductas angusto interluit æstu.

VIRGIL.

Translate into English one of the following pieces of Horace:

Paullum sepultæ distat inertiæ
Celata virtus. Non ego te meis
Chartis inornatum silebo,
Totve tuos patiar labores
Impune, Lolli, carpere lividas
Obliviones. Est animus tibi
Rerumque prudens et secundis
Temporibus dubiisque rectus;
Vindex avaræ fraudis et abstinens
Ducentis ad se cuncta pecuniæ,
Consulque non unius anni,
Sed quoties bonus atque fidus
Judex honestum prætulit utili,
Rejecit alto dona nocentium
Vultu, per obstantes catervas
Explicuit sua victor arma.
Non possidentem multa vocaveris
Recte beatum: rectius occupat
Nomen beati, qui Deorum
Muneribus sapienter uti
Duramque callet pauperiem pati
Pejusque leto flagitium timet,
Non ille pro caris amicis
Aut patria timidus perire.

HORACE.

O Diva, gratum quæ regis Antium,
Præsens vel imo tollere de gradu
  Mortale corpus vel superbos
    Vertere funeribus triumphos.
Te Dacus asper, te profugi Scythæ,
Urbesque gentesque et Latium ferox
  Regumque matres barbarorum et
    Purpurei metuunt tyranni,
Injurioso ne pede proruas
Stantem columnam neu populus frequens
  Ad arma cessantes, ad arma
    Concitet imperiumque frangat.
Te semper anteit sæva Necessitas,
Clavos trabales et cuneos manu
  Gestans aëna, nec severus
    Uncus abest liquidumque plumbum.
Te Spes et albo rara Fides colit
Velata panno nec comitem abnegat,
  Utcunque mutata potentes
    Veste domos inimica linquis.
At vulgus infidum et meretrix retro
Perjura cedit; diffugiunt cadis
  Cum fæce siccatis amici
    Ferre jugum pariter dolosi.

HORACE.

Translate, explain, and comment on the following passages:

Signa ego Punicis
Adfixa delubris, et arma
  Militibus sine cæde, dixit,
Direpta vidi.

Diffidit urbium
Portas vir Macedo, et subruit æmulos
Regis muneribus.

Æoliis fidibus querentem
Sappho puellis de popularibus.

HORACE.

Limosoque lacu per noctem obscurus in alva
Delitui, dum vela darent, si forte dedissent.

Et terram Hesperiam venies, ubi Lydius arva
Inter opima virum leni fluit agmine Thybris.

Sunt hic etiam sua præmia laudi,
Sunt lacrimæ rerum, et mentem mortalia tangunt.

VIRGIL.

Legatorum verba quanti fecerit pericula mea declarant.

Rogationem ad populum promulgat, ut quæreretur in eos, quorum consilio Jugurtha senati decreta neglexisset.

Quibus si quicquam unquam pensi fuisset, non ea consilio pro republica habuissent.

SALLUST.

INSPECTORS, NATIONAL SCHOOLS, IRELAND.

Cui rei capitalis dies dicta sit, et de quo futurum propediem judicium, eum indemnatum indicta causa non debere violari.

Non inviderunt laudes suas mulieribus viri Romani: adeo sine obtrectatione gloriæ alienæ vivebatur.

Celata morte, per speciem alienæ fungendæ vicis suas opes firmavit.

LIVY.

GREEK.

(*See* p. 498.)

[Xenophon—Book I. of Anabasis: two Books of the Iliad: and one Book of Herodotus.]

(*Candidates are to confine themselves to the passages taken from the books which they have selected.*)

Time allowed, 3 hours.

HOMER.—*Il.* I.

Translate into English:

Ναὶ δὴ ταῦτά γε πάντα, γέρον, κατὰ μοῖραν ἔειπες.
Ἀλλ' ὅδ' ἀνὴρ ἐθέλει περὶ πάντων ἔμμεναι ἄλλων,
Πάντων μὲν κρατέειν ἐθέλει, πάντεσσι δ' ἀνάσσειν,
Πᾶσι δὲ σημαίνειν, ἃ τιν' οὐ πείσεσθαι οἴω.
Εἰ δέ μιν αἰχμητὴν ἔθεσαν θεοὶ αἰὲν ἐόντες,
Τοὔνεκά οἱ προθέουσιν ὀνείδεα μυθήσασθαι;
Τὸν δ' ἄρ' ὑποβλήδην ἠμείβετο δῖος Ἀχιλλεύς·
Ἦ γάρ κεν δειλός τε καὶ οὐτιδανὸς καλεοίμην,
Εἰ δὴ σοὶ πᾶν ἔργον ὑπείξομαι, ὅ, ττι κεν εἴπῃς·
Ἄλλοισιν δὴ ταῦτ' ἐπιτέλλεο, μὴ γὰρ ἔμοιγε
Σήμαιν'· οὐ γὰρ ἔγωγ' ἔτι σοι πείσεσθαι οἴω.
Ἄλλο δέ τοι ἐρέω, σὺ δ' ἐνὶ φρεσὶ βάλλεο σῇσιν·
Χερσὶ μὲν οὔτοι ἔγωγε μαχήσομαι εἵνεκα κούρης,
Οὔτε σοί, οὔτε τῳ ἄλλῳ, ἐπεί μ' ἀφέλεσθέ γε δόντες·
Τῶν δ' ἄλλων, ἅ μοί ἐστι θοῇ παρὰ νηῒ μελαίνῃ,
Τῶν οὐκ ἄν τι φέροις ἀνελὼν ἀέκοντος ἐμεῖο.
Εἰ δ', ἄγε μήν, πείρησαι, ἵνα γνώωσι καὶ οἵδε·
Αἶψά τοι αἷμα κελαινὸν ἐρωήσει περὶ δουρί.

Translate and explain:

Ἀλλὰ σύ, εἰ δύνασαί γε, περίσχεο παιδὸς ἑῆος·
Ἐλθοῦσ' Οὔλυμπόνδε, Δία λίσαι, εἴποτε δή τι
Ἢ ἔπει ὤνησας κραδίην Διός, ἠὲ καὶ ἔργῳ.

Περὶ γάρ ῥά ἑ χαλκὸς ἔλεψεν
Φύλλα τε καὶ φλοιόν· νῦν αὖτέ μιν υἷες Ἀχαιῶν
Ἐν παλάμῃς φορέουσι δικασπόλοι, οἵτε θέμιστας
Ποὸς Διὸς εὐρύανται·

HOMER.—*Il.* III.

Translate into English:

Ὦ γύναι, ἦ μάλα τοῦτο ἔπος νημερτὲς ἔειπες.
Ἤδη γὰρ καὶ δεῦρό ποτ' ἦλυθε δῖος Ὀδυσσεύς,
Σεῦ ἕνεκ' ἀγγελίης, σὺν Ἀρηϊφίλῳ Μενελάῳ.
Τοὺς δ' ἐγὼ ἐξείνισσα, καὶ ἐν μεγάροισι φίλησα,
Ἀμφοτέρων δὲ φυὴν ἐδάην καὶ μήδεα πυκνά.
Ἀλλ' ὅτε δὴ Τρώεσσιν ἐν ἀγρομένοισιν ἔμιχθεν,
Στάντων μὲν Μενέλαος ὑπείρεχεν εὐρέας ὤμους,
Ἀμφω δ' ἑζομένω, γεραρώτερος ἦεν Ὀδυσσεύς·
Ἀλλ' ὅτε δὴ μύθους καὶ μήδεα πᾶσιν ὕφαινον,
Ἤτοι μὲν Μενέλαος ἐπιτροχάδην ἀγορευεν,
Παῦρα μέν, ἀλλὰ μάλα λιγέως· ἐπεὶ οὐ πολύμυθος,
Οὐδ' ἀφαμαρτοεπής, ἠὲ καὶ γένει ὕστερος ἦεν.
Ἀλλ' ὅτε δὴ πολύμητις ἀναΐξειεν Ὀδυσσεύς,
Στάσκεν, ὑπαὶ δὲ ἴδεσκε, κατὰ χθονὸς ὄμματα πήξας,
Σκῆπτρον δ' οὔτ' ὀπίσω οὔτε προπρηνὲς ἐνώμα,
Ἀλλ' ἀστεμφὲς ἔχεσκεν, ἀΐδρεϊ φωτὶ ἐοικώς·
Φαίης κε ζάκοτόν τέ τιν' ἔμμεναι, ἄφρονά τ' αὔτως·
Ἀλλ' ὅτε δή ῥ' ὄπα τε μεγάλην ἐκ στήθεος ἵει,
Καὶ ἔπεα νιφάδεσσιν ἐοικότα χειμερίῃσιν,
Οὐκ ἂν ἔπειτ' Ὀδυσῆϊ γ' ἐρίσσειε βροτὸς ἄλλος·
Οὐ τότε γ' ὧδ' Ὀδυσῆος ἀγασσάμεθ' εἶδος ἰδόντες.

Translate and explain:

Γρηῒ δέ μιν εἰκυῖα παλαιγενέϊ προσέειπεν,
Εἰροκόμῳ, ἥ οἱ Λακεδαίμονι ναιεταώσῃ
Ἥσκειν εἴρια καλά, μάλιστα δέ μιν φιλέεσκεν·

Αἰεί τοι κραδίη πέλεκυς ὥς ἐστιν ἀτειρής,
Ὅστ' εἶσιν διὰ δουρὸς ὑπ' ἀνέρος, ὅς ῥά τε τέχνῃ
Νήϊον ἐκτάμνῃσιν, ὀφέλλει δ' ἀνδρὸς ἐρωήν.

INSPECTORS, NATIONAL SCHOOLS, IRELAND.

HOMER.—*Il.* XXII.

Translate into English:

Ὡς ἄρα φωνήσας εἰρύσσατο φάσγανον ὀξὺ,
Τό οἱ ὑπὸ λαπάρην τέτατο μέγα τε στιβαρόν τε,
Οἴμησεν δὲ ἀλεὶς ὥς τ' αἰετὸς ὑψιπετήεις,
Ὅς τ' εἶσιν πεδίονδε διὰ νεφέων ἐρεβεννῶν
Ἀρπάξων ἢ ἄρν' ἀμαλὴν ἢ πτῶκα λαγωόν·
Ὡς Ἕκτωρ οἴμησε τινάσσων φάσγανον ὀξύ.
Ὡρμήθη δ' Ἀχιλεὺς, μένεος δ' ἐμπλήσατο θυμὸν
Ἀγρίου, πρόσθεν δὲ σάκος στέρνοιο κάλυψεν
Καλὸν δαιδάλεον, κόρυθι δ' ἐπένευε φαεινῇ
Τετραφάλῳ· καλαὶ δὲ περισσείοντο ἔθειραι
Χρύσεαι, ἃς Ἥφαιστος ἵει λόφον ἀμφὶ θαμειάς.
Οἷος δ' ἀστὴρ εἶσι μετ' ἀστράσι νυκτὸς ἀμολγῷ
Ἕσπερος, ὃς κάλλιστος ἐν οὐρανῷ ἵσταται ἀστὴρ,
Ὡς αἰχμῆς ἀπέλαμπ' εὐήκεος, ἣν ἄρ' Ἀχιλλεὺς
Πάλλεν δεξιτερῇ φρονέων κακὸν Ἕκτορι δίῳ,
Εἰσορόων χρόα καλὸν, ὅπῃ εἴξειε μάλιστα.
Τοῦ δὲ καὶ ἄλλο τόσον μὲν ἔχε χρόα χάλκεα τεύχεα,
Καλὰ, τὰ Πατρόκλοιο βίην ἐνάριξε κατακτάς·
Φαίνετο δ', ᾗ κληῖδες ἀπ' ὤμων αὐχέν' ἔχουσιν,
Λαυκανίην, ἵνα τε ψυχῆς ὠκιστος ὄλεθρος.
Τῇ ῥ' ἐπὶ οἱ μεμαὼς ἔλασ' ἔγχεϊ δῖος Ἀχιλλεὺς,
Ἀντικρὺ δ' ἀπαλοῖο δι' αὐχένος ἦλυθ' ἀκωκή.
Οὐδ' ἄρ' ἀπ' ἀσφάραγον μελίη τάμε· χαλκοβάρεια,
Ὄφρα τί μιν προτιείποι ἀμειβόμενος ἐπέεσσιν.

Translate and explain:

Ἡ μὲν γάρ θ' ὕδατι λιαρῷ ῥέει, ἀμφὶ δὲ καπνὸς
Γίγνεται ἐξ αὐτῆς ὡς εἰ πυρὸς αἰθομένοιο·
Ἡ δ' ἑτέρη θέρεϊ προρέει εἰκυῖα χαλάζῃ
Ἢ χιόνι ψυχρῇ ἢ ἐξ ὕδατος κρυστάλλῳ.
Ἔνθα δ' ἐπ' αὐτάων πλυνοὶ εὐρέες ἐγγὺς ἔασιν
Καλοὶ λαΐνεοι, ὅθι εἵματα σιγαλόεντα
Πλύνεσκον Τρώων ἄλοχοι.

Καὶ δή μιν καταπαύσῃ ἀγηνορίης ἀλεγεινῆς,
Ἣ μιν ἔχεσκ', ἐπεὶ οὔ ποτ' ἐνὶ πληθυῖ μένεν ἀνδρῶν,
Ἀλλὰ πολὺ προθέεσκε, τὸ ὃν μένος οὐδενὶ εἴκων.

INSPECTORS, NATIONAL SCHOOLS, IRELAND.

HEROD.—V.

Translate into English:

Ἀθηναῖοι δέ σφεας ἐπὶ ῥητοῖσι ἐδέξαντο σφέων αὐτῶν εἶναι πολιήτας, πολλῶν τέων καὶ οὐκ ἀξιαπηγήτων ἐπιτάξαντες ἔργεσθαι. Οἱ δὲ Φοίνικες οὗτοι οἱ σὺν Κάδμῳ ἀπικόμενοι, τῶν ἦσαν οἱ Γεφυραῖοι, ἄλλα τε πολλὰ, οἰκήσαντες ταύτην τὴν χώρην, ἐσήγαγον διδασκάλια ἐς τοὺς Ἕλληνας, καὶ δὴ καὶ γράμματα· οὐκ ἐόντα πρὶν Ἕλλησι, ὡς ἐμοὶ δοκέειν· πρῶτα μὲν, τοῖσι καὶ ἅπαντες χρέωνται Φοίνικες· μετὰ δὲ, χρόνου προβαίνοντος, ἅμα τῇ φωνῇ μετέβαλον καὶ τὸν ῥυθμὸν τῶν γραμμάτων. Περιοίκεον δέ σφεας τὰ πολλὰ τῶν χώρων τοῦτον τὸν χρόνον Ἑλλήνων Ἴωνες· οἳ παραλαβόντες διδαχῇ παρὰ τῶν Φοινίκων τὰ γράμματα, μεταρρυθμίσαντές σφεων ὀλιγα, ἐχρέωντο· χρεώμενοι δέ ἐφάτισαν, ὥσπερ καὶ τὸ δίκαιον ἔφερε, ἐσαγαγόντων Φοινίκων ἐς τὴν Ἑλλάδα, Φοινικήϊα κεκλῆσθαι. καὶ τὰς βύβλους διφθέρας καλέουσι ἀπὸ τοῦ παλαιοῦ οἱ Ἴωνες, ὅτι κοτὲ ἐν σπάνι βύβλων ἐχρέωντο διφθέρῃσι αἰγέῃσί τε καὶ οἰέῃσι· ἔτι δὲ καὶ τὸ κατ' ἐμὲ πολλοὶ τῶν βαρβάρων ἐς τοιαύτας διφθέρας γράφουσι.

Translate and explain:

Ἐσβὰς δὲ ἐς ἄρουραν ἐσπαρμένην, ἅμα τε διεξήϊε τὸ λήϊον, ἐπειρωτῶν τε καὶ ἀναποδίζων τὸν κήρυκα κατὰ τὴν ἀπὸ Κορίνθου ἄπιξιν, καὶ ἐκόλουε αἰεὶ ὅκως τινὰ ἴδοι τῶν ἀσταχύων ὑπερέχοντα.

Εὖ ἐιδότα ὡς οὗτοί γε οὐ καταπροΐξονται ἀποστάντες.

Κρεμαμένης δὲ τῆς κεφαλῆς, καὶ ἤδη ἐούσης κοίλης, ἔσμος μελισσέων ἐσδὺς εἰς αὐτὴν, κηρίων μιν ἐνέπλησε.

INSPECTORS, NATIONAL SCHOOLS, IRELAND.

HEROD.—VIII.

Translate into English:

Καί τοι τάδε λέγω· φείδεο τῶν νηῶν, μηδὲ ναυμαχίην ποιέο. οἱ γὰρ ἄνδρες τῶν σῶν ἀνδρῶν κρέσσονες τοσοῦτό εἰσι κατὰ θάλασσαν, ὅσον ἄνδρες γυναικῶν. τί δὲ πάντως δέει σε ναυμαχίῃσι ἀνακινδυνεύειν; οὐκ ἔχεις μὲν τὰς Ἀθήνας, τῶν περ εἵνεκα αἰρμήθης στρατεύεσθαι, ἔχεις δὲ τὴν ἄλλην Ἑλλάδα; ἐμποδὼν δέ τοι ἵσταται οὐδείς· οἱ δ' ἔτι ἀντέστησαν, ἀπήλλαξαν οὕτω ὡς κείνους ἔπρεπε. Τῇ δὲ ἐγὼ δοκέω ἀποβήσεσθαι τὰ τῶν ἀντιπολέμων πρήγματα, τοῦτο φράσω. ἢν μὲν μὴ ἐπειχθῇς ναυμαχίην ποιεύμενος, ἀλλὰ τὰς νῆας αὐτοῦ ἔχῃς πρὸς γῇ μένων, ἢ καὶ προβαίνων ἐς τὴν Πελοπόννησον, εὐπετέως τοι, δέσποτα, χωρήσει τὰ νοέων ἐλήλυθας. οὐ γὰρ οἷοί τε πολλὸν χρόνον εἰσί τοι ἀντέχειν οἱ Ἕλληνες, ἀλλά σφεας διασκεδᾷς, κατὰ πόλις δὲ ἕκαστοι φεύξονται.

Translate and explain:

Τοὺς ἐπιβάτας ἀπὸ τῆς καταδυσάσης νηὸς βάλλοντες ἀπήραξαν, καὶ ἐπέβησάν τε καὶ ἔσχον αὐτήν.

Οἱ δὲ καὶ δὴ νικῶσι, ὅσον αὐτοὶ ἠρῶντο ἐπικρατῆσαι τῶν ἐχθρῶν.

Ἀνέθεσαν ἀστέρας χρυσέους, οἱ ἐπὶ ἱστοῦ χαλκέου ἑστᾶσι τρεῖς ἐπί τῆς γωνίης.

Ὁ δὲ θεός σφεας οὐκ ἔα κινέειν φὰς αὐτὸς ἱκανὸς εἶναι τῶν ἑαυτοῦ προκατῆσθαι.

XEN.—*Anab.* 1. VIII.

Translate into English:

Κῦρος δὲ ψιλὴν ἔχων τὴν κεφαλὴν εἰς τὴν μάχην καθίστατο· λέγεται δὲ καὶ τοὺς ἄλλους Πέρσας ψιλαῖς ταῖς κεφαλαῖς ἐν τῷ πολέμῳ διακινδυνεύειν. Οἱ δ' ἵπποι πάντες οἱ μετὰ Κύρου εἶχον καὶ προμετωπίδια καὶ προστερνίδια· εἶχον δὲ καὶ μαχαίρας οἱ ἱππεῖς Ἑλληνικάς. Καὶ ἤδη τε ἦν μέσον ἡμέρας καὶ οὔπω καταφανεῖς ἦσαν οἱ πολέμιοι· ἠνίκα δὲ δείλη ἐγίγνετο, ἐφάνη κονιορτὸς ὥσπερ νεφέλη λευκή, χρόνῳ δὲ οὐ συχνῷ ὕστερον ὥσπερ μελανία τις ἐν τῷ πεδίῳ ἐπὶ πολύ· ὅτε δὲ ἐγγύτερον ἐγίγνοντο, τάχα δὴ καὶ χαλκός τις ἤστραπτε καὶ αἱ λόγχαι καὶ αἱ τάξεις καταφανεῖς ἐγίγνοντο. Καὶ

ἦσαν ἱππεῖς μὲν λευκοθώρακες ἐπὶ τοῦ εὐωνύμου τῶν πολεμίων· Τισσαφέρνης ἐλέγετο τούτων ἄρχειν· ἐχόμενοι δὲ τούτων γερροφόροι, ἐχόμενοι δὲ ὁπλῖται σὺν ποδήρεσι ξυλίναις ἀσπίσιν, Αἰγύπτιοι δ' οὗτοι ἐλέγοντο εἶναι· ἄλλοι δ' ἱππεῖς, ἄλλοι τοξόται. πάντες δ' οὗτοι κατὰ ἔθνη ἐν πλαισίῳ πλήρει ἀνθρώπων ἕκαστον τὸ ἔθνος ἐπορεύετο.

XEN.—*Anab.* I. IX.

Εἰς γε μὴν δικαιοσύνην, εἴ τις αὐτῷ φανερὸς γένοιτο ἐπιδείκνυσθαι βουλόμενος, περὶ παντὸς ἐποιεῖτο τούτους πλουσιωτέρους ποιεῖν τῶν ἐκ τοῦ ἀδίκου φιλοκερδούντων. Καὶ γὰρ οὖν ἄλλα τε πολλὰ δικαίως αὐτῷ διεχειρίζετο καὶ στρατεύματι ἀληθινῷ ἐχρήσατο. καὶ γὰρ στρατηγοὶ καὶ λοχαγοὶ οὐ χρημάτων ἕνεκα πρὸς ἐκεῖνον ἔπλευσαν, ἀλλ' ἐπεὶ ἔγνωσαν κερδαλεώτερον εἶναι Κύρῳ καλῶς πειθαρχεῖν ἢ τὸ κατὰ μῆνα κέρδος. Ἀλλὰ μὴν εἴ τίς γέ τι αὐτῷ προστάξαντι καλῶς ὑπηρετήσειεν, οὐδενὶ πώποτε ἀχάριστον εἶασε τὴν προθυμίαν. τοιγαροῦν κράτιστοι δὴ ὑπηρέται παντὸς ἔργου Κύρῳ ἐλέχθησαν γενέσθαι. Εἰ δέ τινα ὁρῴη δεινὸν ὄντα οἰκονόμον ἐκ τοῦ δικαίου καὶ κατασκευάζοντά τε ἧς ἄρχοι χώρας καὶ προσόδους ποιοῦντα, οὐδένα ἂν πώποτε ἀφείλετο, ἀλλ' ἀεὶ πλείω προσεδίδου· ὥστε καὶ ἡδέως ἐπόνουν καὶ θαῤῥαλέως ἐκτῶντο καὶ ὃ ἐπέπατο αὖ τις, ἥκιστα Κῦρον ἔκρυπτεν.

Translate and explain:

Ἔδεισαν οἱ Ἕλληνες μὴ προσαγοιεν πρὸς τὸ κέρας καὶ περιπτύξαντες ἀμφοτέρωθεν αὐτοὺς κατακόψειαν, καὶ ἐδόκει αὐτοῖς ἀναπτύσσειν τὸ κέρας.

Ἐνταῦθα λέγεται Ἀπολλων ἐκδεῖραι Μαρσύαν νικήσας ἐρίζοντά οἱ περὶ σοφίας.

Ὡς δὲ τῷ ἀνδρὶ ὃν ἂν ἕλησθε πείσομαι ᾗ δυνατὸν μάλιστα.

Διφθέρας ἃς εἶχον σκεπάσματα ἐπίμπλασαν χόρτου κούφου, εἶτα συνῆγον καὶ συνέσπων, ὡς μὴ ἅπτεσθαι τῆς χάρφης τὸ ὕδωρ.

INSPECTORS, NATIONAL SCHOOLS, IRELAND.

FRENCH.

(*See* p. 498.)

Time allowed, 2½ hours.

Translate into English:

Un jour Alcipe aborda Mondor avec un air affligé. Aussitôt Mondor s'affligea, car il n'y a point de plus sottes gens que les gens d'esprit qui ont le cœur bon. Alcipe lui dit qu'il avait perdu cent louis sur sa parole; Mondor les lui prêta sans vouloir de billet: il crut par là s'être acquis un ami; il eut tort, il ne le revit plus. Il donna dans les gens de lettres. Il y en eut un en qui Mondor crut reconnaître du talent; il lut son ouvrage avec attention, c'était une comédie. Il retrancha des détails superflus, exigea plus de fond, demanda à l'auteur de mieux enchaîner ses scènes, de les faire naître l'une de l'autre, de mettre toujours les acteurs en situation, de prendre bien plus garde à la justice du dialogue qu'au faux brillant de l'esprit, de soutenir ses caractères, de les nuancer finement sans trop les contraster. Il lui fit remarquer que les paquets de vers jettent presque toujours du froid sur l'action. Voilà les conseils qu'il donna à l'auteur; il corrigea la pièce en conséquence. Il éprouva que Mondor l'avait mal conseillé: les comédiens ne trouvèrent pas qu'elle fût jouable. Cela le dégoûta de donner des avis. Le même auteur composa une autre pièce qui n'était qu'un amas de scènes informes et décousues. Mondor n'ose pas lui conseiller de ne la point donner; il eut tort, car la pièce fut sifflée.

DE VOISENON.

Même progrès pour l'industrie. À l'origine, l'homme a d'abord employé la force du bœuf et du cheval. Il a pris celui-là pour porte-faix, celui-ci pour moteur. Ensuite il a utilisé la fibre plus intelligente de l'esclave, et lui a donné la meule à tourner; puis de la force du muscle, il a conclu à la force du courant pour mouvoir le moulin, puis à la force du vent pour remplir le même office; puis de conclusion en conclusion, il en est venu à la force de la pesanteur dans le pendule de l'horloge, et la loi du progrès le poussant toujours, à la vapeur, âme nouvelle empruntée à Dieu par un autre Prométhée pour animer une seconde humanité chargée de travailler à notre place et nous laisser par là le temps de la pensée; de la vapeur, il a glissé ensuite, comme par une irrésistible logique, à l'électricité, estafette enflammée de l'espace, présente à la fois partout, tant elle est mue d'une vitesse infinie. Avant peu de temps, si nous en croyons le pressentiment de la science, le fluide magnétique aura congédié le courrier, le facteur, le commissionnaire, le télégraphe, et servira seul à travers l'atmosphère la correspondance du monde entier. Il fera du globe un salon, où chacun parlera d'un antipode à l'autre à l'oreille de chacun; car, qu'est ce qu'une distance de six mille lieues pour une étincelle qui fait soixante mille lieues à la seconde? Ainsi, l'homme amasse incessamment en lui et autour de lui une plus complète vitalité et la rayonne sans cesse au dehors. Il amplifie, il dilate son être dans l'espace et dans la durée.

Translate into French:

Francis died at Rambouillet, on the last day of March 1547, in the fifty-third year of his age and the thirty-third of his reign. During twenty-eight years of that time an avowed rivalship subsisted between him and the Emperor Charles the Fifth, which involved not only their own dominions, but the greater part of Europe, in wars which were

prosecuted with violent animosity. Many circumstances contributed to this. Their animosity was founded in opposition of interests, heightened by personal emulation and exasperated by mutual injuries and also by reciprocal insults. At the same time, whatever advantage one seemed to possess towards gaining ascendance, was wonderfully balanced by some favourable circumstance peculiar to the other. The Emperor's dominions were of greater extent, the French king's lay more compact; Francis governed his kingdom with absolute power, that of Charles was limited, but he supplied the want of authority by address. The troops of the former were more impetuous and enterprising, those of the latter more disciplined, and more patient of fatigue. The talents and abilities of the two monarchs were as different as the advantages which they possessed, and contributed no less to prolong the contest between them.

EDUCATION. (OBLIGATORY.)

Time allowed, 3 hours.

1. What were the circumstances which induced Milton to write his letter on Education, and what do you know of the person to whom it was addressed?
2. Explain, from the context, the purport of the following passages or portions of passages :—
   (1.) Hence appear the many mistakes which have made learning generally so unpleasing and so unsuccessful.
   (2.) This I take to be the most rational and most profitable way of learning languages.
   (3.) I call therefore a complete and generous education that which——(complete the sentence).
   (4.) For their studies——(what is the curriculum he prescribes?).
3. To whom, and in what year, did Locke address his Thoughts on Education? What rules does he lay down as to the physical training of the body?
4. What opinions does Locke hold as to Rewards and Punishments, respectively, in the Education of Children?
5. Discuss Locke's views on the relative merits of Public and Private Education.
6. In what sequence does Locke arrange the various branches of Education? How far do you agree with him?
7. Give a concise account of Ascham's life, and state in detail the circumstances under which he wrote the "Scholemaster." What is the meaning of his allusions to Westminster Hall in the Preface?
8. Give a brief analysis of the "Scholemaster," dwelling more particularly on those portions of it which you consider of value in the present day and for all times.
9. How does Ascham divide and subdivide the Poetical, the Historical, the Philosophical, and the Oratorical styles respectively?
10. What principles does Robinson lay down as to the right method of teaching the meanings of words in a reading lesson, and to what errors is the teacher liable in carrying out that method?
11. Compare and discuss the methods recommended by Robinson and Joyce respectively for teaching Grammar. What method would you adopt yourself?
12. What are the principal precautions to be observed in teaching Geography?

INSPECTORS, NATIONAL SCHOOLS, IRELAND.

13. What does Robinson say as to the importance of teaching carefully and skilfully the study and practice of Numeration and Notation? What does Joyce lay down as to Mental Arithmetic?
14. Discuss the value of the Monitorial System.

ENGLISH LITERATURE. (1.) (OPTIONAL.)

Time allowed, 3 hours.

[BACON.—Essays. SHAKESPEARE.—Hamlet, and As You Like It.]

1. It has been said that "to men wishing to rise in the world by the politic management of their fellow-men, Bacon's Essays are the best possible handbook." Justify and illustrate this statement by quotations.
2. What *historical* authorities are quoted in the Essays on *Simulation* and *Dissimulation*, on *Great Place*, and on *Seditions* and *Troubles*, and for what purpose?
3. Analyse the Essay on *Beauty*. Give its *antitheta*, and state the main differences of its text in different editions.
4. Give Bacon's views (1) of a perfect form of government, (2) of a perfect system of education, (3) of the moral attributes which go to make the character of "a good man." Give quotations.
5. Explain the *allusions* in the following passages. Give the Essay and context where they occur, and comment on the words italicised:
   (1.) The *ancient times* do set forth *in figure* both the incorporation and inseparable *conjunction* of counsel with Kings and the wise and *politic* use of counsel by Kings.
   (2.) But sometimes it is seen that the *moderator* is more troublesome than the *actor*.
   (3.) Romulus after his death sent a *present* to the Romans, that above all they should *intend* arms.
   (4.) Measure out thine *advancements* by quantity, but frame them by *measure*.
   (5.) All *practice* is to discover, or to work.
6. "Shakespeare's mastery over keys of sadness is the most memorable side of his mighty genius." Examine and illustrate this statement with quotations from "*Hamlet*" and "*As You Like It*."
7. Mention any grammatical anomalies in Shakespeare's use of words and constructions, and state the grounds on which they have been justified.
8. What types do you find in "*Hamlet*" and "*As You Like It*"—(1) Of the man of the world, (2) of the cynic, (3) of the fool, (4) of the courtier, (5) of the lover, and (6) of the idealist? Give quotations.
9. Criticise the *female* characters in "*Hamlet*" and "*As You Like It*," and compare them with other female creations of the poet.
10. Give the context of the following passages, and comment on their various readings and on the words italicised:
    (1.) In the *dead vast*, and middle of the night.
    (2.) *Sith* nor the exterior nor the inward man
    Resembles *that* it was.
    (3.) That monster, custom, who all *sense doth eat*
    Of *habit's devil*, is angel yet in this.
    (4.) My father's love is *enough* to honour him. *Enough!*
    (5.) Till that the *wearer's very means* do ebb.

ENGLISH LITERATURE. (2.) (OPTIONAL.)

Time allowed, 3 hours.

MILTON.—Sonnets, L'Allegro, Il Penseroso, Comus, and Paradise Lost, Books 1 and 2. BURKE.—American Taxation, Conciliation with America, and Address to the Electors of Bristol. MACAULAY.—Essays on Clive and Hastings.

1. According to Lord Macaulay, of all the poets who have introduced into their works the agency of supernatural beings, Milton has succeeded best. Examine this statement, and illustrate it from the *Paradise Lost.*
2. Quote allusions in Milton's poems to *music*, *astrology*, *medicine*, *marriage*, and *religious persecutions*, and to *British legends.*
3. How does Milton *account* for the Heathen mythology? How does he *use* it? What *epithets* does he give to *Styx*, *Acheron*, *Moloch*, *Mammon*, *Saturn*, and *Olympus?*
4. Explain the allusions, state the context, and comment on the words italicised in the following passages:—
   (1.) O, foolishness of men! that lend their ears
   To those *budge doctors* of the *Stoic* fur,
   And fetch their precepts from the *Cynic tub.*
   (2.) When *gowns*, not *arms*, repelled
   The fierce *Epirot*, and the *African* bold.
   (3.) Every shepherd tells his *tale.*
   (4.) adorned
   With *gay religions*, full of pomp and gold.
   (5.) Dropt from the *zenith* like a falling star.
   (6.) Drew after him the third part of Heaven's sons
   Conjured against the Highest.
5. Give Burke's opinion, with quotations, on (1) "metaphysical theories" of government; (2) "international disputes"; (3) "the principles of commerce"; (4) "taxation."
6. Burke's style is said to consist of "the accumulated spoils of many languages and of all ages." Quote passages in illustration of this statement.
7. Give the context of the following statements, and the ground on which Burke justifies them:—
   (1.) (America) had the image of the British Constitution, she had the substance.
   (2.) Undoubtedly Mr. Grenville was a first-rate figure in this country.
   (3.) You keep up Revenue Laws, which are mischievous, to preserve Trade Laws that are useless.
8. Give Lord Macaulay's account (1) of the French and Dutch Settlements in India; (2) of Meer Jaffier; (3) of Clive's "parliamentary tactics"; (4) of Warren Hastings' Trial.
9. Give the context of the following statements, and the historical grounds on which they are justified:—
   (1.) The wide dominion of the Franks was severed into a thousand pieces.
   (2.) (The power of the East India Company) in the time of Clive was not merely an anomaly but a nuisance.
   (3.) Hastings' internal administration, with all its blemishes, gives him a title to be considered as one of the most remarkable men in our history.

INSPECTORS, NATIONAL SCHOOLS, IRELAND.

ENGLISH HISTORY. (OPTIONAL.)

Time allowed, 3 hours.

1. The part played by the organization of the English Church, in the seventh century, in bringing about the unity of the English nation.
2. Name the changes in the administration of justice which followed the Norman Conquest.
3. Describe the character and government of Henry I.
4. Discuss the claims of Edward I. to the overlordship of Scotland.
5. Account for the social risings that took place in the reign of Richard II.
6. Write a short life of Cardinal Pole.
7. How far was the foreign policy of Elizabeth marked by consistency of aim?
8. Give instances of overstrained use of the Prerogative between 1629 and 1640.
9. Discuss the policy of the Peace of Utrecht.
10. What were the occurrences that led to war with Spain at the close of Sir Robert Walpole's ministry?

HISTORY OF GREECE (SMITH), AND ROME (LIDDELL). (OPTIONAL.)

Time allowed, 3 hours.

1. Describe the composition and objects of the Amphictyonic Council.
2. Account for the rise and fall of the Despots in the Greek States, and illustrate your answer by examples.
3. Describe shortly the growth of the Persian empire down to the outbreak of the Ionic revolt.
4. Give a short account of the career of Epaminondas, and of the rise and fall of the Theban hegemony.
5. The struggle between Philip and Athens down to the battle of Chaeronea.
6. What evidence is there of a decline in the power of Rome after the expulsion of the kings?
7. Describe the composition and arrangement of a Roman army.
8. Describe the struggle between Rome and Samnium down to the end of the Third Samnite War.
9. Give an account of the career of Jugurtha.
10. The course of events from the rupture between Antony and Octavian down to the death of Antony.

LOGIC, (OPTIONAL.)

[Walker, omitting Chapters on Induction and Fallacies; and Whately's Easy Lessons on Reasoning.]

Time allowed, 3 hours.

1. Under what conditions is disjunctive reasoning valid? Illustrate your answer by examples.
2. Is it an objection to the syllogism to allege that the premisses virtually contain the conclusion? Give Whately's argument on this subject.

3. State the rules of the second and third figures, and show that they are only forms of the rules on which the first figure is founded.
4. State in logical form and convert the following propositions :—
   1. All the conspirators, save only he,
      Did what they did in envy of great Cæsar.
   2. The enemy, as he said, was within three miles of the army.
   3. Eternal summer gilds them yet,
      But all, except their sun, is set.
   4. Imitation is the sincerest flattery.
5. Show that a definition may be "adequate" and yet not "clear," that it may be "descriptive" and not "analytical," may be "characteristic" but not "essential;" and point out the meaning of these terms.
6. Explain the nature and consequences of an illogical division.
7. Draw out syllogisms in Cesare, Datisi, Ferison, and Baroco, of which the following shall be the conclusions :—
   No carnivorous animals are ruminant.
   Some good intentions are mischievous.
   Some prophets are not to be trusted.
   Some sea coasts are not healthy.
8. With what object and with what advantages are the terms *comprehension*, *extension*, and *abstraction* introduced into the theory of Logic?
9. State the laws of opposition, and point out the use which is made of this property of propositions.
10. "The number of legitimate and useful modes in the several figures may be determined *à priori*." In what manner does Walker supply the proof of this statement?

POLITICAL ECONOMY. (OPTIONAL.)

Time allowed, 3 hours.

[Adam Smith's Wealth of Nations, Books I., II., III., and V., with either of the following: J. S. Mill, Books I., II., III., and V., or Fawcett's Manual, Book I., Book II., Chapters 3, 4, 5, Book III., Chapters 1, 2, 5, 6, and 8.]

1. In what directions, according to Adam Smith, did the "mercantile theory" influence the policy of this country?
2. Under what circumstances only will the advantages of protection belong to the protected manufacturer?
3. Are there any branches of human industry in which nature does more for man than is done in others?
4. For what reasons, and within what limits, do political economists discuss the functions of Government?
5. In case an article like coal becomes scarce, are there any causes which would check an excessive price of the product?
6. Show that Mr. Mill's statement, "The distribution of wealth is a matter of human institution only," may have, except under certain limitations, pernicious consequences.
7. Will primary education, universally accorded, tend to raise the rate of wages? Connect your answer with the theory of Smith, Mill, or Fawcett as to the causes which determine wages.

INSPECTORS, NATIONAL SCHOOLS, IRELAND.

8. It is said that tenant-right, in the extreme form which the claim may assume, creates *two* landlords in place of *one*. Examine this statement by the theory of rent.
9. In what sense is a bank said to produce or aggravate a commercial panic?
10. Examine the effect of taxes on wages, profits, rents, raw materials, and finished goods respectively.

HIGHER MATHEMATICS. (OPTIONAL.)

Time allowed, $3\frac{1}{2}$ hours.

1. Prove that the area of a spherical triangle is proportional to the excess of the sum of the angles over two right angles.
2. State Napier's rules for the solution of right-angled spherical triangles.
   Prove them for the cases in which one of the angles is taken for the middle part.
3. The spherical triangle ABC has each of its sides a quadrant, and P is a point within the triangle; prove that—

$$\text{Cos}^{2}\text{PA}+\cos^{2}\text{PB}+\cos^{2}\text{PC}=1.$$

4. Find the relations between the coefficients and roots of an equation.
   If the roots of—

$$2x^3-3qx+r=0$$

   be in harmonic progression, prove that the mean root must be equal to $\sqrt{q}$.
5. In an equation with rational coefficients, prove that surd roots must occur in pairs.
   Solve the equation—

$$x^4+x^3-5x^2-7x-2=0,$$

   given that $1+\sqrt{2}$ is a root.
6. State and prove Des Cartes's rule of signs.
7. Assuming that $lt_{x=\infty}\left(1+\frac{1}{x}\right)^x=e$, prove that $lt_{y=0}\frac{e^y-1}{y}=1$.
   Deduce the differential coefficient of e^x.
8. Find $\frac{dy}{dx}$ in the following cases:—
   (1.) $y=\left(\frac{a+x}{a-x}\right)^{\frac{1}{2}}$.
   (2.) $y=\tan^{-1}\{x+\tan^{-1}x\}$.
   (3.) $(x+a)^y=(y+b)^x$.
9. Find the rth differential coefficient of $x^n\ e^{mx}$.
   If $y^n-ny+(n-1)\ x=a$, prove that

$$\frac{d^2y}{dx^2}-ny^{n-2}\left(\frac{dy}{dx}\right)^2=0.$$

INSPECTORS NATIONAL SCHOOLS, IRELAND

10. Apply Maclaurin's theorem to find the first four terms of the expansion of $e^{\sin(x+a)}$ in powers of x.

11. Prove that the least and greatest possible values of the expression—

$$3x^5-10x^4+10x^3-5x+3$$

are given when x is 1 & $-\frac{1}{3}$ respectively.

12. Prove the expressions—

(1.) $p=x\frac{dy}{ds}-y\frac{dx}{ds}$,

(2.) $\frac{dA}{d\theta}=\frac{r^2}{2}$,

where the symbols have their ordinary meanings in plane curves.

13. Find an expression for the radius of curvature at any point of a curve, and prove that the radius of curvature of the curve $3a^2y=x^3$ when $x=a$ is $\sqrt{2}a$.

14. Trace the curve—

$$r^2=\frac{a^2\cos\theta}{2-\sin\theta},$$

and find its area.

15. Find the asymptotes and trace the curve—

$$y^2=\frac{a^3(x-a)}{x^2-4a^2}.$$

16. Integrate the expressions—

(1.) $\sqrt{a^2-x^2}$. (2.) $\frac{x}{x^2-5x+6}$

(3.) $\frac{1}{1+\tan x}$.

GREEK. (EXTENDED COURSE, OPTIONAL.)

Time allowed, 3 hours.

Translate into English:

Ὁρῶν ὑμᾶς, ὦ ἄνδρες στρατιῶται, πεφοβημένους τὸ πλῆθος τῶν ἐναντίων ξυνεκάλεσα, οὐκ ἀξιῶν τὰ μὴ δεινὰ ἐν ὀρρωδίᾳ ἔχειν. οὗτοι γὰρ πρῶτον μὲν διὰ τὸ προνενικῆσθαι καὶ μηδὲ αὐτοὶ οἴεσθαι ὁμοῖοι ἡμῖν εἶναι τὸ πλῆθος τῶν νεῶν καὶ οὐκ ἀπὸ τοῦ ἴσου παρεσκευάσαντο· ἔπειτα ᾧ μάλιστα πιστεύοντες προσέρχονται, ὡς προσῆκον σφίσιν ἀνδρείοις εἶναι, οὐ δι' ἄλλο τι θαρσοῦσιν ἢ διὰ τὴν ἐν τῷ πεζῷ ἐμπειρίαν τὰ πλείω κατορθοῦντες, καὶ οἴονται σφίσι καὶ ἐν τῷ ναυτικῷ ποιήσειν τὸ αὐτό. τὸ δ' ἐκ τοῦ δικαίου ἡμῖν μᾶλλον νῦν περιέσται, εἴπερ καὶ τούτοις ἐν ἐκείνῳ, ἐπεὶ εὐψυχίᾳ γε οὐδὲν προφέρουσι, τῷ

INSPECTORS, NATIONAL SCHOOLS, IRELAND.

δὲ ἑκάτεροί τι ἐμπειρότεροι εἶναι θρασύτεροί ἐσμεν. Λακεδαιμόνιοί τε ἡγούμενοι τῶν ξυμμάχων διὰ τὴν σφετέραν δόξαν ἄκοντας προσάγουσι τοὺς πολλοὺς ἐς τὸν κίνδυνον, ἐπεὶ οὐκ ἄν ποτε ἐπεχείρησαν ἡσσηθέντες παρὰ πολὺ αὖθις ναυμαχεῖν. μὴ δὴ αὐτῶν τὴν τόλμαν δείσητε· πολὺ δὲ ὑμεῖς ἐκείνοις πλέω φόβον παρέχετε καὶ πιστότερον κατά τε τὸ προνενικηκέναι καὶ ὅτι οὐκ ἂν ἡγοῦνται μὴ μέλλοντάς τι ἄξιον τοῦ παρὰ πολὺ πράξειν ἀνθίστασθαι ἡμᾶς.

THUCYDIDES.

ΜΕΝΕΛΑΟΣ.

Μεῖνον· τί φεύγεις; ὡς δέμας δείξασα σὸν
Ἔκπληξιν ἡμῖν ἀφασίαν τε προστίθης.

ΕΛΕΝΗ.

Ἀδικούμεθ', ὦ γυναῖκες· εἰργόμεσθα γὰρ
Τάφου πρὸς ἀνδρὸς τοῦδε, καί μ' ἑλὼν θέλει
Δοῦναι τυράννοις, ὧν ἐφεύγομεν γάμους.

ΜΕ. Οὐ κλῶπές ἐσμεν, οὐδ' ὑπηρέται κακῶν.

ΕΛ. Καὶ μὴν στολήν γ' ἄμορφον ἀμφὶ σῶμ' ἔχεις.

ΜΕ. Στῆσον, φόβους μεθεῖσα, λαιψηρὸν πόδα.

ΕΛ. Ἵστημ', ἐπεί γε τοῦδ' ἐφάπτομαι τόπου.

ΜΕ. Τίς εἶ; τίν' ὄψιν σὴν, γύναι, προσδέρκομαι;

ΕΛ. Σὺ δ' εἶ τίς; αὐτὸς γὰρ σὲ κἄμ' ἔχει λόγος.

ΜΕ. Οὐπώποτ' εἶδον προσφερέστερον δέμας.

ΕΛ. Ὦ θεοί. θεὸς γὰρ καὶ τὸ γιγνώσκειν φίλους.

ΜΕ. Ἑλληνὶς εἶ τις ἢ 'πιχωρία γυνή;

ΕΛ. Ἑλληνίς· ἀλλὰ καὶ τὸ σὸν θέλω μαθεῖν.

ΜΕ. Ἑλένῃ σ' ὁμοίαν δὴ μάλιστ' εἶδον, γύναι.

ΕΛ. Ἐγὼ δὲ Μενέλεῳ γε σ'· οὐδ' ἔχω τί φῶ.

ΜΕ. Ἔγνως γὰρ ὀρθῶς ἄνδρα δυστυχέστατον.

ΕΛ. Ὦ χρόνιος ἐλθὼν σῆς δάμαρτος ἐς χέρας.

ΜΕ. Ποίας δάμαρτος; μὴ θίγῃς ἐμῶν πέπλων.

ΕΛ. Ἣν σοι δίδωσι Τυνδάρεως, ἐμὸς πατήρ.

ΜΕ. Ὦ φωσφόρ' Ἑκάτη, πέμπε φάσματ' εὐμενῆ.

ΕΛ. Οὐ νυκτίφαντον πρόπολον Ἐνοδίας μ' ὁρᾷς.

EURIPIDES.

INSPECTORS, NATIONAL SCHOOLS, IRELAND.

Translate into Greek:

Oppressed at once by war and pestilence, their lands desolated, their homes filled with mourning, it is not surprising that the Athenians were seized with rage and despair, or that they vented their anger on Pericles, whom they deemed the author of their misfortunes. But that statesman still adhered to his plans with unshaken firmness. Though the Lacedæmonians were in Attica, though the plague had already seized on Athens, he was vigorously pushing his plans of offensive operations. A foreign expedition might not only divert the popular mind, but would prove beneficial by relieving the crowded city of part of its population, and accordingly a fleet was fitted out, of which Pericles himself took the command, and which committed devastations upon various parts of the Peloponnesian coast. But, upon returning from this expedition, Pericles found the public feeling more exasperated than before. Envcys had even been despatched to Sparta to sue for peace, but had been dismissed without a hearing; a disappointment which had rendered the populace still more furious.

LATIN. (EXTENDED COURSE, OPTIONAL.)

Time allowed, 3 hours.

Translate into English:

Nec ambigitur, provinciam et militem alienato erga Vespasianum animo fuisse: et quidam e Vitellianis, urbe profugi, ostentabant Pisoni nutantes Gallias, paratam Germaniam, pericula ipsius et in pace suspecta tutius bellum. Inter quæ Claudius Sagitta, præfectus alæ Petrinæ, prospera navigatione prævenit Papirium centurionem a Muciano missum, adseveravitque mandata interficiendi Pisonis centurioni data. Cecidisse Galerianum, consobrinum eius generumque. Unam in audacia spem salutis. Sed duo itinera audendi; seu mallet statim arma, seu petita navibus Gallia, ducem se Vitellianis exercitibus ostenderet. Nihil ad ea moto Pisone, centurio a Muciano missus, ut portum Carthaginis adtigit, magna voce læta Pisoni omnia, tamquam principi, continuare; obvios et subitæ rei miraculo adtonitos, ut eadem adstreperent, hortari. Vulgus credulum ruere in forum: præsentiam Pisonis exposcere. Gaudio clamoribusque cuncta miscebant, indiligentia veri et adulandi libidine. Piso, indicio Sagittæ, vel insita modestia, non in publicum egressus est, neque se studiis vulgi permisit. Centurionemque percunctatus, postquam quæsitum sibi crimen cædemque comperit, animadverti in eum iussit, haud perinde spe vitæ, quam ira in percussorem, quod idem ex interfectoribus Clodii Macri, cruentas legati sanguine manus ad cædem proconsulis retulisset. Anxio deinde edicto Carthaginiensibus increpitis, ne solita quidem munia usurpabat, clausus intra domum, ne qua motus novi caussa oriretur.

TACITUS.

Pauca licet portes argenti vascula puri,
Nocte iter ingressus gladium contumque timebis
Et motæ ad lunam trepidabis arundinis umbram:
Cantabit vacuus coram latrone viator.
Prima fere vota et cunctis notissima templis
Divitiæ, crescant ut opes, ut maxima toto
Nostra sit arca foro. Sed nulla aconita bibuntur
Fictilibus: tunc illa time, quum pocula sumes
Gemmata et lato Setinum ardebit in auro.

INSPECTORS, NATIONAL SCHOOLS, IRELAND.

Jamne igitur laudas, quod de sapientibus alter
Ridebat, quoties de limine moverat unum
Protuleratque pedem; flebat contrarius alter?
Sed facilis cuivis rigidi censura cachinni:
Mirandum est, unde ille oculis suffecerit humor.
Perpetuo risu pulmonem agitare solebat
Democritus, quanquam non essent urbibus illis
Prætexta et trabeæ, fasces, lectica, tribunal.
Quid, si vidisset prætorem curribus altis
Exstantem et medio sublimem in pulvere Circi,
In tunica Jovis, et pictæ Sarrana ferentem
Ex humeris aulæa togæ magnæque coronæ
Tantum orbem, quanto cervix non sufficit ulla?

JUVENAL.

Translate into Latin:

Just before the battle began, a hind chased by a wolf (so runs the story) ran down between the armies; the hind sought refuge among the Gauls, and was slain by their javelins; the wolf turned into the Roman ranks, and no man touched the sacred beast of Romulus. This was hailed as an omen of good, and the battle began. Fabius, after an obstinate struggle, brought up his reserve, and the Samnites gave way. But he could not pursue them; for Decius on his side had been less successful. The Gauls had brought their war-chariots into action, and the Romans were terror-struck by these strange engines of destruction. A panic seized the cavalry, and the legions wavered; when Decius resolved to follow the example of his father, and devote himself for his country. He went through the same solemn forms; his heroic death lent new courage to his men, and they returned to the charge under the command of M. Livius, the Pontifex. Still the Gauls kept their ground unflinching, till Fabius, having driven the Samnites from the field, detached the Campanian cavalry, followed by a battalion of legionaries, to take them in rear. Thus surrounded, they were soon completely broken, and a general pursuit took place.

INDEXING AND ABRIDGING CLERKS, PATENT OFFICE.

IV.—PAPERS SET AT AN OPEN COMPETITIVE EXAMINATION FOR INDEXING AND ABRIDGING CLERKSHIPS IN THE PATENT OFFICE.

*** For Regulations, *see* page 27.
For Table of Marks, *see* page 190.

For the PRELIMINARY TEST EXAMINATION the following papers were set:—

I. COPYING PAPER.

See page 473.

II. EXERCISES IN DICTATION.

See page 472.

III. ARITHMETIC.

Similar to that set for Constabulary Cadets. *See* page 483.

INDEXING AND ABRIDGING CLERKS, PATENT OFFICE.

IV. ADDITION.

Six sums similar to those on page 485.

V. ENGLISH COMPOSITION.

Similar to that set for Factory Inspectorships.

In the COMPETITION the following papers were set :—

PRÉCIS.

For instructions, *see* page 474.

The Correspondence set consisted of about 10 pages of a Parliamentary Paper, "respecting the proposed Confederation of the Colonies and States of South Africa."

ELEMENTARY GEOMETRY.

Time allowed, 3 hours.

1. Define an *Axiom* and a *Postulate ;* and distinguish between *Analysis* and *Synthesis* in Geometry.
2. In any right-angled triangle the square which is described upon the side subtending the right angle is equal to the squares described upon the sides which contain the right angle.
3. If from the vertex of a plane triangle a perpendicular fall upon the base or the base produced, the difference of the squares of the sides is equal to the difference of the squares of the segments of the base.
4. In every triangle the square of the side subtending any of the acute angles is less than the squares of the sides containing that angle by twice the rectangle contained by either of these sides, and the straight line intercepted between the perpendicular let fall upon it from the opposite angle and the acute angle.
5. If a straight line drawn through the centre of a circle bisect a straight line in it which does not pass through the centre it shall cut it at right angles ; and if it cut it at right angles it shall bisect it.
6. If a straight line touches a circle, and from the point of contact a straight line be drawn cutting the circle, the angles made by this line with the line touching the circle shall be equal to the angles which are in the alternate segments of the circle.
7. If a circle be described on the radius of another circle's diameter, any chord of the outer circle drawn from the point of contact is bisected by the inner.
8. If two circles touch each other, and also touch a straight line, show that the part of the line between the points of contact is a mean proportional between the diameters of the circles.

INDEXING AND ABRIDGING CLERKS, PATENT OFFICE.

9. If a straight line be drawn parallel to one of the sides of a triangle it shall cut the other sides, or those produced, proportionally; and if the sides, or the sides produced, be cut proportionately, the straight line which joins the points of section shall be parallel to the remaining side of the triangle.
10. If from the three angles of a triangle lines be drawn to the points of bisection of the opposite sides, these lines shall intersect each other in the same point.

PRACTICAL GEOMETRY.

Time allowed, 3 hours.

N.B.—*The figures should be neatly drawn in clear fine pencil lines, and if time allows they should be inked in with Indian ink. The solutions must be strictly geometrical, and particular care should be taken to show all the necessary lines of construction.*

1. The diameter of a fly wheel is 11 feet, and measures on a drawing $3\frac{1}{4}$ inches. Construct a diagonal scale of feet and inches to suit the drawing. Make the whole scale of such a length as to represent 15 feet.
2. A drawing is made to a French scale of 5 decimètres to an inch. Construct a comparative scale of English feet showing 10 feet. (A decimètre = ·327 of a foot.)
3. Describe a circle of 2 inches diameter, and about it describe a regular pentagon. On the sides of the pentagon describe isosceles triangles having their two equal sides 1·75 inches long, and join the apex of each triangle with the apex of that adjoining it by the segment of a circle of 2·25 inches radius, and having its centre within the first described circle.
4. Describe a circle of 3 inches diameter, and divide it into two segments by a straight line distant half an inch from the centre. In the larger segment inscribe a square.
5. The base of a triangle is 2·7 inches long, and the angle opposite to it 40°. The difference between the other two sides is $\frac{3}{4}$ of an inch. Construct the triangle.
6. AB, BC, CA, the sides of a triangle are 2·6 inches, 4·2 inches, and 3·5 inches respectively. Construct the triangle, and bisect it by a line parallel to AB.
7. The major and minor axes of an ellipse are 3·8 inches and 2·6 inches respectively. Draw the ellipse by means of intersecting arcs, and at any point in the curve, not being the extremity of either axis, draw a tangent.
8. Describe a circle with a radius of 1·2 inches, and from its centre C draw two lines CA and CB, 1·9 inches and 2·2 inches respectively, making the angle BCA equal to 35°. Describe a second circle touching the first and passing through the points A and B.

INDEXING AND ABRIDGING CLERKS, PATENT OFFICE.

9. The same train reaches the foot of an incline of 1 in 100 at a speed of 40 miles per hour. Steam being then shut off the train is retarded by the incline and by a constant resistance of 800 lbs. Find in what distance the train will come to rest.
10. A heavy body falls freely under the action of an acceleration of 32·2 feet per second. Find the velocity and space described at the end of 5 seconds.
11. Show that a body projected horizontally and acted on by gravity falls in a parabolic curve.
12. Explain what is meant by the efficiency of a machine.

    One engine pumps 10,000 gallons of water per minute from a depth of 1,200 feet, consuming 14,400 lbs. of coal per day. Another engine lifts 16,000 gallons from a depth of 360 feet, consuming 7,200 lbs. of coal per day. Which is the more economical engine?
13. Show how to determine the pressure at any depth in a liquid. Thence determine the pressure on a square foot at the bottom of the Atlantic, taking the depth at 5 miles, and the weight of water at 64 lbs. per cubic foot. Would the result be different if the compressibility of the water were taken into account?

MECHANISM.

Time allowed, 3 hours.

1. Briefly explain the following technical terms:

   Accumulator (hydraulic); air pump (of steam engine); plunger; worm; crab; ratchet; oliver; cup leather; surface plate.
2. Briefly but accurately distinguish between the following operations in metal working; casting; forging; welding; tempering; annealing; boring; shaping; planing.
3. Why are certain regular curves selected for constructing wheel teeth? State what are the usual forms of well constructed wheel teeth. In what cases may the whole or part of a wheel tooth be made straight?
4. Explain and illustrate by sketches the construction of a clip drum. What are the conditions as to force and speed which require the use of a clip drum, in preference to ordinary pulleys?
5. Define the following varieties of toothed gearing: Spur wheels; bevil wheels; skew bevil wheels.
6. Two shafts with a velocity ratio of 3 to 1 and 2 feet apart are connected by spur wheels, the smaller wheel having 12 teeth. Find the pitch.
7. Describe any one form of parallel motion.
8. What are the two distinct functions of an escapement in clockwork? Illustrate by a sketch any one form of escapement.
9. Define the instantaneous axis of a link. In a horizontal engine the crank is two feet radius and the connecting rod 10 feet long. The crank being at 45° from the dead point, indicate by a sketch the position of the instantaneous axis of the connecting rod.

   Supposing the crank pin to move uniformly with a velocity of 10 feet per second, determine the velocity of the crosshead end of the connecting rod.
10. Give a sketch of the train of wheels which might be used to connect the minute and hour hand of a watch. Mark against each wheel the number of teeth you would assign to it.

11. Explain the action of the ordinary pendulum governor used on steam engines. Find a relation between the vertical height of the governor and the speed of rotation.
12. What is meant by a dynamometer? Describe any form of dynamometer which could be used for measuring the work transmitted through a rotating shaft.
13. In English watches a fusee is used between the spring and the gearing. Explain the action of the fusee in securing a more uniform motion. In some foreign watches the fusee is dispensed with. What modification of construction is adopted to compensate for its absence?
14. Power is to be transmitted from an engine to a considerable distance. Discuss the relative advantages and disadvantages of the following methods of transmission:
    (1) Shafting.
    (2) Belting.
    (3) Hydraulic connexion.

CHEMISTRY.

Time allowed, 3 hours.

1. Define equivalent weights, alkali, metalloid, tribasic acid, substitution-product.
2. What are the elements of sand, bell-metal, german silver, plumbago, ozone, starch, gelatine, alcohol, mundic, and petroleum?
3. Explain the chemical changes which occur in the air of a room in which a jet of coal gas is burnt. If there be ammonia in the gas what effect will that have?
4. State the chemical composition of copperas, cubic nitre, white arsenic, sugar, alum, prussian blue, black-ash, smalt, paraffin, and chloroform.
5. State the relation between cast iron, malleable iron, and steel. What is white iron? Describe and explain one method of converting iron into steel.
6. Explain briefly the essential chemical actions in the manufacture of nitric acid, red lead, soda-ash, ether, soap, and aniline, respectively.
7. What is hydraulic lime, and on what chemical action does the characteristic property of such lime depend?
8. What solvents will dissolve (1) lead, (2) soft solder? By what tests can you detect each of the metals in the solutions so made?
9. Give an outline of the chemistry of a process for recovering sulphur from the waste of alkali works.

ELECTRICITY AND MAGNETISM.

Time allowed, 3 hours.

1. Show by examples what different kinds of effect are produced by electric discharges. Explain the principle of lightning conductors. How far, and for what reasons, is a solid rod better for such a purpose than a chain, a tube, or a wire rope?

INDEXING AND ABRIDGING CLERKS, PATENT OFFICE.

2. Name the magnetic substances. Explain the construction of an electro-magnet. How far will such an arrangement act like a magnet if the core be removed, or a core of another metal inserted?
3. Describe the most effectual method of magnetizing a steel bar and avoiding consequent poles.
4. Explain how to test the relative conductivity for electricity of two metals. What is the relation between the resistance of a wire and its length, thickness, and conductivity? Arrange in order of conductivity: silver, iron, water, dilute sulphuric acid, copper, german silver, wood, marble.
5. Describe Daniell's and a bichromate battery. What advantages have they, respectively, in use?
6. Describe a sine-galvanometer, and a chemical voltameter. In what cases are they severally applicable to the measurement of currents?
7. Explain the use of relays in telegraphy, and how they are put in action.
8. How is the electric light produced? Whence arises the difficulty of keeping the light steady?
9. Explain the principle of a magneto-electric machine; and describe Siemens' armature and its advantages.

HYDROSTATICS, HYDRAULICS, AND PNEUMATICS.

Time allowed, 3 hours.

1. Define density.

   If the centimètre be the unit of length, and a cubic centimètre of water be the unit of mass, and be called a gramme, prove that the number of grammes in the earth is $6{\cdot}15 \times 10^{27}$, given that the diameter of the earth is $1{\cdot}275 \times 10^{9}$ centimètres, and that its mean density is 5·67.
2. Define specific gravity.

   There are three substances A, B, and C, whose specific gravities are 11, $\frac{1}{4}$, and $\frac{1}{8}$ respectively: what weight of B must be added to 100 lbs. of A in order that the compound mass may have the same mean specific gravity as C?
3. How is fluid pressure measured? Prove that in a mass of water at rest the difference of the pressures at any two points is proportional to the difference of the depths of these points below any fixed horizontal plane, and therefore that the free surface of water at rest must be a horizontal plane.
4. How must the results stated in the last question be modified when the water is at rest relatively to a containing vessel which—
   (α) revolves uniformly about a vertical axis?
   (β) slides freely down a smooth inclined plane?
5. Define the terms "metacentre," "surface of buoyancy," and "curve of buoyancy." Find the curve of buoyancy in the case of a triangular lamina floating with one angle immersed, the plane of displacement being that of the lamina.
6. Find the conditions of equilibrium of a floating body.

   If the quantity of water displaced by a ship sailing with small oscillations be constant, prove that the motion of the ship will be the same as if it were rigidly connected with the surface of buoyancy while the latter surface moves on a smooth horizontal plane (the motion of the water being neglected).

INDEXING AND ABRIDGING CLERKS, PATENT OFFICE.

7. Find the magnitude and line of action of the resultant pressure of water at rest upon any plane surface in contact with it.

   Find the height to which the water contained in a reservoir may rise without overturning the wall, supposing the thickness of the latter to be a feet and the specific gravity of the material of which it is composed to be s, and supposing also that there is no depth of foundation.

8. Explain the construction and action of the hydraulic ram.

9. Explain the action of the siphon.

   Find the greatest height over which a liquid of specific gravity 2·66 can be carried by a siphon, the height of the barometer being 29·12 inches and the specific gravity of mercury 13·568.

10. Explain the construction and action of the common pump.

    If the height of the spout above the surface of the water in the well be that of the water barometer, and if at the commencement of any stroke the surface of the water in the suction pipe be m feet and n feet below the spout and the suction or fixed valve respectively, prove that the rise of water in that stroke will be $\sqrt{m}\,(\sqrt{m}-\sqrt{n})$ feet, the bores of the cylinder and suction pipe being equal, and the range of the piston extending the whole length of the cylinder.

11. Describe Smeaton's air pump.

    What is the Sprengel contrivance for obtaining a perfect vacuum?

12. Prove that the strength of a spherical boiler of given material and thickness is inversely proportional to the radius.

13. By what laws are the pressure, temperature, and volume connected in the case, (α) of a perfect gas, (β) of steam in contact with water?

    A boiler is two-thirds full of water, the remaining space being filled with air and steam. When one-third of the water is drawn off through the tap the pressure on the safety valve is diminished by one-fifth, the temperature remaining the same. Prove that the pressure of the air and steam were originally equal (supposing no air to be drawn off with the water).

V.—PAPERS SET AT AN OPEN COMPETITIVE EXAMINATION FOR A JUNIOR CLERKSHIP IN THE OFFICE OF WOODS.

JUNIOR CLERKS, OFFICE OF WOODS.

*** For Regulations, *see* Appendix to 21st Report of the Civil Service Commissioners, page 31.

For Table of Marks, *see* page 196.

EXERCISE TO TEST HANDWRITING.

See page 473.

DICTATION.

See page 472.

JUNIOR CLERKS, OFFICE OF WOODS.

ARITHMETIC.

Time allowed, 2½ hours.

N.B.—You are particularly recommended to answer the questions in the order in which they are set; not omitting any one unless you are unable to do it.

1. In 3147062 ounces, how many tons, cwts., qrs., &c.?
2. If 38 gallons of whisky cost £15. 13*s*. 6*d*., what is the price of 74 gallons?
3. Find (by Practice) the value of 4215 articles at £1. 14*s*. 5¼*d*. each.
4. Find the simple interest on £419. 7*s*. 8*d*. for 5 years at 4½ per cent. per annum (neglecting fractions of a penny).

---

5. Add together $2\frac{1}{3}$, $\frac{1}{4}$, $3\frac{1}{5}$, and $4\frac{1}{6}$.
6. Subtract $\frac{5}{8}$ from $\frac{7}{9}$.
7. Multiply $\frac{13}{14}$ by $\frac{18}{91}$.
8. Divide $\frac{4}{19}$ by $\frac{8}{57}$.

---

9. Add together 3·76125, ·60129, 250·05, and 34·608192.
10. Subtract 543·1065 from 2071·02.
11. Multiply 317·942 by ·0125.
12. Divide 32·58585 by ·681.
13. Reduce ·0065937 of a pound troy to grains and the decimal of a grain.

---

14. Reduce 2 miles 5 furlongs 2 yards to feet.
15. If 5 acres of pasturage will support 10 oxen 6½ days, how long will they support 26 oxen?
16. Find (by Practice) the dividend on £1,463. 15*s*. at 4*s*. 7*d*. in the £.
17. Find the amount of £3,680 in 3 years at 4 per cent. compound interest (neglecting fractions of a penny).

---

18. Add together $7\frac{1}{4}$, $\frac{7}{8}$, $4\frac{8}{9}$, and $\frac{13}{30}$.
19. Subtract $2\frac{1}{13}$ from $4\frac{1}{52}$.
20. Multiply together $\frac{13}{144}$, $\frac{17}{42}$, $1\frac{1}{13}$, and $\frac{1}{51}$.
21. Divide $8\frac{3}{19}$ by $11\frac{1}{14}$.

---

22. Add together 60·547, 219·05, 199, ·692, and 4·376.
23. Subtract 22·800376 from 23·01107.
24. Multiply 3·00106 by 2·081.
25. Divide ·003634 by 6·32.
26. Express 4*s*. 1½*d*. as the decimal of £3.

---

27. In 4731268 square feet how many acres, roods, poles, &c.?
28. If 10 men can build a wall 65 feet long and 5 feet high in 3¼ days, in how many days will 2 men build a wall 80 feet long and 4 feet high?
29. Find (by Practice) the value of 17 ounces 10 dwts. 12 grs. at £1. 13*s*. 4*d*. an ounce.
30. In how many years will £2,100 amount to £5,250 at 4 per cent. simple interest?

---

31. Add together $4\frac{3}{7}$, $\frac{3}{4}$, $\frac{7}{8}$, and $1\frac{3}{56}$.
32. Subtract $8\frac{7}{9}$ from $10\frac{3}{14}$.
33. Multiply together $\frac{2}{21}$, $1\frac{3}{4}$, $\frac{6}{17}$, and $\frac{34}{63}$.
34. Divide 5 by $3\frac{7}{10}$.

---

35. Add together ·326 of a day and ·018 of an hour, and give the answer in minutes and the decimal fraction of a minute.
36. Subtract ·706 of a gallon from 18·42 quarts, and give the answer in pints and the decimal of a pint.
37. Multiply ·0137 by ·00612.
38. Divide ·66005 by ·0307.
39. Reduce ·4639 of a £ to farthings and the decimal of a farthing.

ADDITION.

See page 485.

SUBJECTS FOR ENGLISH COMPOSITION.

Time allowed, 2½ hours.

In this Exercise attention should be paid to handwriting, spelling, punctuation, grammar, and style.

Conclusion of an ancient epitaph:

"What I spent I had; what I saved I lost; what I gave I saved."

Or,

Self-conceit and Self-reliance: distinguish and describe these characters.

The Composition should fill not less than two folio pages.

PRÉCIS.

For instructions, *see* page 474.

The Correspondence set was a part of a Parliamentary paper, "Further Correspondence respecting proposed New Customs Ordinance, Gibraltar."

DIGESTING RETURNS INTO SUMMARIES.

Time allowed, 2½ hours.

N.B.—(*a.*) *The work should be done correctly, neatly, and quickly, but in assigning marks more importance will be attached to accuracy than to quickness.*

(*b.*) *The paper put before you must not be mutilated in any way. Mistakes should be corrected, but no erasure is to be made. Calculations may be made on waste paper, which will be provided for that purpose, but no rough copy of any part of the Form is to be made.*

Rule a Form, (which should be as *wide* as your paper will admit,) like the subjoined specimen, and enter in the several columns the particulars given, observing carefully the following instructions:—

1. That all capitals and stops given in the specimen-form are to be exactly reproduced.
2. That the number of Sixpences for the years 1868–1875 will have to be calculated from the information given.
3. That the figures in the columns headed "Value," as well as the last column and the Totals, will have to be supplied by you.

JUNIOR CLERKS, OFFICE OF WOODS.

(SPECIMEN OF FORM.)

STATEMENT of SILVER MONEY coined at the MINT during the ten years 1866 to 1875.

Year.	Florins.		Shillings.		Sixpences.		Fourpences.		Threepences.		Total Value of Silver Coined.
	Number of Pieces.	Value.	Number of Pieces.	Value.	Number of Pieces.	Value.	Number of Pieces.	Value.	Number of Pieces.	Value.	
		£		£		£		£ s. d.		£ s. d.	£ s. d.
Totals											

The NUMBER of THREEPENCES coined at the MINT during the ten years 1866–1875 was as follows:—

In 1866...1,905,288; in 1867...717,288; in 1868...1,461,768; in 1869...4,488; in 1870...1,398,408; in 1871...1,034,088; in 1872...1,113,288; in 1873...4,059,528; in 1874...4,455,528; in 1875...3,315,048.

The NUMBER of FOURPENCES coined at the MINT has not varied during the ten years 1866–1875, having been 4,158 pieces each year.

The NUMBER of SIXPENCES coined at the MINT in 1866 was 5,140,080, and the variation in the number each year was as follows:—

In 1867	a decrease	on the previous year	of	3,777,840	pieces.
„ 1868	„	„	„	293,040	„
„ 1869	„	„	„	681,020	„
„ 1870	an increase	„	„	657,360	„
„ 1871	„	„	„	2,621,520	„
„ 1872	„	„	„	110,880	„
„ 1873	„	„	„	617,760	„
„ 1874	a decrease	„	„	166,320	„
1875	„	„	„	974,160	„

JUNIOR CLERKS, OFFICE OF WOODS.

STATEMENT of the NUMBER of SHILLINGS and FLORINS coined at the MINT during the ten years 1866–1875.

Year.	Shillings.	Florins.	Year.	Shillings.	Florins.
1866	4,989,600	914,760	1871	4,819,320	3,558,060
1867	2,166,120	423,720	1872	8,866,440	6,920,100
1868	3,330,360	896,940	1873	6,486,480	5,965,740
1869	736,560	297,000	1874	5,500,440	1,807,740
1870	1,908,720	1,976,040	1875	4,356,000	1,142,460

ELEMENTS OF THE LAW OF REAL PROPERTY.

(With special reference to the Law of Landlord and Tenant.)

Time allowed, 3 hours.

1. Explain the nature of Distress, stating what things are absolutely and conditionally privileged from distraint respectively.
2. Describe the nature and principal incidents of an estate by the curtesy. To what extent are estates of this kind found upon copyhold lands?
3. Explain the distinction between powers collateral and powers relating to land, and give examples of both kinds.
4. State the general rule of law with respect to fixtures annexed to the freehold by a tenant, and specify the principal exceptions to the rule.
5. Define a mortgage, and state the mortgagee's remedies in default of payment.
6. Explain the rules of Descent with respect to representation and the inheritance of persons of the half-blood.
7. State the principal provisions of the Agricultural Holdings Act, 1875.
8. "Incorporeal hereditaments appurtenant to corporeal hereditaments are not very often met with": Comment on this statement, and describe the rights which most usually appertain to lands and houses.
9. Explain the nature of the franchises of forest, park, and warren, and of the private rights which may exist in public rivers.
10. Define the meaning of the following terms: conditional fee, common appendant, equity of redemption, *cestui-que-vie*, copyhold for years.

ELEMENTS OF CONVEYANCING.

Time allowed, 3 hours.

1. State concisely the form of a conveyance of land to the uses of an ordinary family settlement of real estate.
2. Illustrate the maxim that "the Law abhors perpetuity."

JUNIOR CLERKS, OFFICE OF WOODS.

3. How would you convey the legal and equitable estates respectively in a copyhold of inheritance and a copyhold for lives without right of renewal?
4. In what cases is it practicable to prove a title by ancient documents without evidence of modern acts of ownership?
5. In what cases can rights over land be lost by abandonment, and to what extent is non-user evidence of abandonment.
6. What is the proper mode of proving copyhold assurances, fines and recoveries, and the facts of birth, death, and marriage?
7. What are the vendor's obligations in respect of an open contract for the sale of fee-simple land?
8. What would be the effect of a condition that "the purchaser shall not require any further proof of the identity of the property than is furnished by the title deeds themselves" in a case where the deeds do not afford proof of the identity of all the parcels?
9. In what manner are the freehold and copyhold estates of married women respectively conveyed to purchasers?
10. What are the exact objects of the examination of the documents set forth in a vendor's Abstract of Title?

GEOGRAPHY OF THE BRITISH ISLES.

Time allowed, 3 hours.

1. Describe, from source to mouth, the course of the river Thames, mentioning the tributaries which it receives on either side, the towns by which it flows, their manufactures or industry, and other remarkable features.
2. Where are the following places: Carlisle, Carrickfergus, Drogheda, Galashiels, Grantham, Harwich, Inverness, Jedburgh, Killala, Llanberis, Maryborough, Newcastle-under-Lyne, Norwich, Oban, Paisley, Queenstown, Ramsgate, Sunderland, Tyrone, Wimbledon; and what do you know about any of them?
3. Draw a map and give a short description of Leicestershire, or Fifeshire, or Antrim.
4. What harbours, headlands, rivers, and bays would be passed in a coasting voyage along the south coast of England, from the Lizard to the South Foreland?
5. Mention the principal lakes of Scotland, the rivers which run out of them, and any towns near them.
6. Describe the course of the river Blackwater in Ireland, and name the counties drained by it or its tributaries.
7. In what parts of the British Isles are coal, iron, and lead found?
8. Which are the chief seats of the cotton, hardware, and cutlery manufactures in the British Isles?
9. Mention and describe the situation of some of the larger islands near the coasts of Great Britain.

JUNIOR CLERKS, OFFICE OF WOODS.

ENGLISH HISTORY (OPTIONAL).

Time allowed, 3 hours.

1. What is the importance in English history of the period covered by the Reign of Stephen? Compare it with that of the Wars of the Roses.
2. Give an account of the enactment and abolition, and of the substance, of the Statute known as the Provisions of Oxford (1258).
3. Who were the Lollards? What were their particular views, religious or social?
4. Give an account of the policy of Cardinal Wolsey, ecclesiastical and foreign.
5. Write a short life of Lord Strafford; point out any remarkable incidents in the proceedings which led to his execution.
6. What were the principal English sects in the time of the Stuarts? What share had any of them in the colonization of America?
7. Give the chief incidents of the Revolution of 1688, between the issuing of the second Declaration of Indulgence, May 1688, and the accession of William and Mary.
8. What are the most famous Acts by which the duration of Parliaments has from time to time been regulated? Was the Septennial Act unconstitutional?
9. Mention the principal defeats and disasters to the English arms during the last hundred years. State how any of them have been redressed or revenged.

LATIN (OPTIONAL).

Time allowed, 2½ hours.

Translate into English:

Calenus, legionibus equitibusque Brundisii in naves impositis, ut erat præceptum a Cæsare, naves solvit, paullumque progressus a portu, litteras a Cæsare accipit, quibus est certior factus, portus litoraque omnia classibus adversariorum teneri. Quo cognito, se in portum recipit navesque omnes revocat. Una ex iis, quæ perseveravit, neque imperio Caleni obtemperavit, quod erat sine militibus, privatoque consilio administrabatur, delata Oricum atque a Bibulo expugnata est: qui de servis liberisque omnibus supplicium sumit et ad unum interficit. Bibulus, ut supra demonstratum est, erat cum classe ad Oricum: et, sicuti mari portibusque Cæsarem prohibebat, ita ipse omni terra earum regionum prohibebatur: præsidiis enim dispositis omnia litora a Cæsare tenebantur, neque lignandi atque aquandi, neque naves ad terram religandi potestas fiebat.

CÆSAR.

Nolite existumare majores nostros armis rem publicam ex parva magnam fecisse. Si ita esset, multo pulcherrumam eam nos haberemus: quippe sociorum atque civium, præterea armorum atque equorum, major copia nobis quam illis est. Sed alia fuere, quæ illos magnos fecere, quæ nobis nulla sunt: domi industria, foris justum imperium: animus in consulendo liber, neque delicto neque lubidini obnoxius. Pro his nos

JUNIOR CLERKS, OFFICE OF WOODS.

habemus luxuriam atque avaritiam, publice egestatem, privatim opulentiam: laudamus divitias, sequimur inertiam: inter bonos et malos discrimen nullum, omnia virtutis præmia ambitio possidet. Sed ego hæc omitto. Conjuravere nobilissumi cives patriam incendere, Gallorum gentem infestissumam nomini Romano ad bellum accersunt, dux hostium cum exercitu supra caput est: vos cunctamini etiam nunc, quid intra mœnia adprehensis hostibus faciatis? Misereamini censeo—deliquere homines adulescentuli per ambitionem—atque etiam armatos dimittatis: næ ista vobis mansuetudo et misericordia, si illi arma ceperint, in miseriam convertet.

SALLUST.

JUNIOR EXAMINER, OFFICE OF WORKS.

VI.—PAPERS SET AT AN OPEN COMPETITIVE EXAMINATION FOR THE SITUATION OF JUNIOR EXAMINER IN THE OFFICE OF WORKS.

*** For Subjects prescribed, *see* page 126.
For Table of Marks, *see* page 198.

EXERCISES IN DICTATION.

See page 472.

COPYING.

See page 473.

ARITHMETIC.

Similar to that set to Constabulary Cadets. *See* page 483.

ADDITION.

Similar to that set to Constabulary Cadets. *See* page 485.

BUILDER'S WORK, MEASURING AND VALUING.

PART I.

Time allowed, 3 hours.

Answers to be written on one side only of the paper, and each answer to be begun on a separate sheet.
The Candidate's name to be written at the top of each sheet.

1. Explain fully the steps which have to be gone through, in order to ascertain the amount of a contractor's bill for work done upon schedules of prices.

JUNIOR EXAMINER, OFFICE OF WORKS.

2. What is concrete? Write out a specification for mixing and laying the concrete foundations of a dock wall.
3. Estimate the cost of sinking a well 5 ft. diameter, through 30 ft. of stiff clay, and steining the same with 9 ins. of brickwork; the upper 10 ft. being in lias lime mortar, and the rest dry.
4. A 12-inch drain pipe has to be laid at an average depth of 10 ft. in ordinary soil: show, by sketches, how the trench should be timbered; figure its width and the scantlings of the timbers. Give an estimate of the cost of the work per 10 yards run.
5. Draw out a detailed estimate of the materials and labour involved in a rod of stock brickwork faced with best malms, the wall being 18 ins. thick.
6. Measure up and estimate the cost of 200 ft. of feather edged York stone coping, 16 ins. wide, 6 ins. thick weathered to 4 ins., and throated along one edge only, the joints to be secured by iron cramps. Take the cube stone, and work on it, separately.
7. How are the following items of bricklayer's and mason's work measured and paid for? Brick cornices, including mitres and stops; plain-tile arches in cement; groins to brick arches; window sills of ordinary section; joggle joints to stone landings; stops to sunk work, chamfers, &c. in stone.
8. Explain the meaning of the following terms in builder's work:— Ringing engine; brick nogging laid edgewise; chair and saddle pipes for drains; plain work on Portland and on Bath stone; sunk circular work.

BUILDER'S WORK, MEASURING AND VALUING.

PART II.

Time allowed, 3 hours.

1. What are the chief soft woods used by builders, in what forms are they obtained in the market, and for what purposes are they most suitable?
2. Explain the following terms as applied to sawyer's work: a load of timber; slabs; 3 cut deals; flat cuts; cross cuts; deep cuts. How are the last three measured and paid for?
3. Explain the difference between stock locks, rim locks, and mortice locks. Wherein do lever locks differ from ward locks, and what special advantages do they possess?
4. How are the following items measured and paid for? cast iron stack pipes, with heads, bends, and shoes; burning in lead flashings in stone chimney shafts; cement skirting; pugging to floors; glazing to circular fanlights.
5. Estimate the cost of 9 rolled iron joists, $10'' \times 4\frac{1}{2}''$, with $\frac{1}{2}''$ flanges and $\frac{3}{8}''$ web.
6. Draw, to a scale of $8'$ to $1''$, an ordinary roof truss for a 35 ft. span, the rise being one-third the span, measure up and estimate the cost of six such trusses.
7. What is gauged stuff in plasterer's work, and how does plasterer's putty differ from glazier's putty?
8. Explain the principles upon which painter's work is measured and paid for.

ASSISTANT TO SURVEYOR, OFFICE OF WORKS.

VII.—PAPERS SET AT AN OPEN COMPETITIVE EXAMINATION OF CANDIDATES FOR THE SITUATION OF ASSISTANT TO THE SURVEYORS IN THE OFFICE OF WORKS.

*** For Regulations, *see* page 126.
For Table of Marks, *see* page 199.

For the PRELIMINARY TEST EXAMINATION the following papers were set:—

I. COPYING PAPER.

See page 473.

II. EXERCISES IN DICTATION.

See page 472.

III. ARITHMETIC.

Similar to that for Constabulary Cadets, *see* page 483.

IV. ADDITION.

Six sums similar to those on page 485.

In the COMPETITION the following papers were set:—

No. 1a.—ARCHITECTURE.

Time allowed, 3 hours.

1. The *entablature* of a Classic order is made up of the architrave, frieze, and cornice. Describe the treatment of these three members in the three Greek orders, and point out particularly the difference in the cornice at the side and end of such a building as the Parthenon. What is a *pediment?* and what was its usual decorative treatment in the finest periods of Greek art?
2. What new constructive element was introduced by the Romans? Give any particulars with which you may be acquainted of the system of covering in buildings by means of masonry roofs practised by them.
3. What is the grand distinctive difference between Romanesque (or Norman) buildings in England and the Gothic ones which immediately succeeded them?
4. Give a short account of the successive changes which Gothic architecture underwent in England.
5. What do you understand by the "Renaissance" style of architecture? Illustrate your answer fully. When did this revival take place?

No. 1b.—PRINCIPLES OF CONSTRUCTION.

ASSISTANT TO SURVEYOR, OFFICE OF WORKS.

Time allowed, 3 hours.

1. What are the principal points to be attended to in settling the depths and widths of foundations; and if a part of the foundation is subject to a considerably heavier load than adjacent parts (as *e.g.*, when a lofty tower is surrounded by lower buildings), what precautions would you take to avoid the risks attending unequal settlement?
2. Facing bricks are frequently of different dimensions to those forming the body of the wall. Do you consider this arrangement judicious, and, if so, why? If you decided to adopt it how would you propose to secure the necessary bond?
3. Mention the principal building stones with which you are acquainted, with particulars as to the purposes for which they specially fitted, and the precautions (if any) which are necessary in their use.
4. Give a sketch elevation of a roof truss suitable for a span of 50 feet, marking the scantlings of the various members, and distinguishing between those in compression and those in tension.
5. Give the technical names with customary dimensions of the various parts of an ordinary $1\frac{3}{4}$″ four panelled door 7′ 0″ high and 3′ 0″ wide, and describe how they are put together.

   Explain exactly the construction of a ledged and braced door.

   Show by full size sketches, the distinction between bead, butt and square; bead, flush and square; moulded and square; and double moulded framing.
6. Show to a scale of 3″ to the foot, the necessary fittings and finishings to a door jamb in an internal wall $1\frac{1}{2}$ bks. thick, plastered both sides with cement skirting on side next wall and moulded wood skirting 15″ deep in room.

   Give also a section of this skirting, showing mode of attachment, finish of plastering, &c.
7. Give a general description of the way in which Countess slating is executed: 1st, when the roof is boarded on the back of the rafters, such boarding forming the ceiling; 2nd, when the rafters are hidden from view by a flat ceiling and slating battens are used.
8. What is the object of the I section given to rolled iron joists and girders? Point out exactly the effect of applying a load on the beam.

No. 2.—KNOWLEDGE OF MATERIALS.

Time allowed, 3 hours.

Answers to be written on one side only of the paper.
Each answer to be begun on a fresh sheet, with the Candidate's name written at the top.

1. Explain how you would judge of the quality of fir timber in balk, also how you would distinguish Memel, Riga, and Dantzic timber from one another.
2. Mention the different varieties of Oak and Mahogany in ordinary use, and explain how they can be distinguished from one another.

ASSISTANT TO SURVEYOR, OFFICE OF WORKS

3. Explain the difference between the composition, and setting actions, of hydraulic and non-hydraulic limes.
4. Briefly describe the different kinds of cements ordinarily used by builders, and the purposes for which they are chiefly used.
5. What is the difference between ordinary bricks and fire bricks, both as regards their composition and strength? Name two different descriptions of fire brick in ordinary use.
6. What points would you look to in selecting facing bricks, and how would you judge of their fitness for the work.
7. What classes of stones are particularly affected by town atmospheres? Mention some of the means adopted for arresting the decay of the stone in the Houses of Parliament, and state what you know of the results.
8. What should be the ultimate strength of good wrought iron both under tension and compression? Explain the meaning of cold-short and red-short as applied to wrought iron.
9. Of cast and wrought iron, which is the more affected by oxidation, and what action has sea-water upon them?

No. 3.—DESIGNS AND SPECIFICATIONS.

Time allowed, 4 hours.

1. Draw, to a scale of 8 feet to an inch, a pencil plan, elevation, and section of a Mortuary Chapel, 60 feet × 20 feet interior dimensions; with a small robing-room attached, containing about 80 feet super.

   The building to be of brickwork with stone dressings.
2. Draw up a Specification to govern the execution of the design called for in the previous question.

No. 4.—ESTIMATING AND VALUING.

Time allowed, 3 hours.

Answers to be written on one side only of the paper.
Each answer to be begun on a separate sheet, with the Candidate's name written at the top.

1. Estimate in detail the cost per 100 feet run of a new macadamized road, 15 feet wide, with a 6-foot paved pathway on each side. The ground may be taken as practically level, and the soil a stiff clay. A cross section of the road and paths to be given, showing the details of construction.
2. The walls of a stone building are 84 feet × 28 feet from out to out, at the ground level, and 20″ thick, with footings projecting 6″ on both sides. They rest on a bed of 10 to 1 Portland cement concrete, 18″ wider than the footings and 2 feet deep. Measure up and estimate the cost of the excavator's work; and give the details of the materials and labour expended on the concrete.
3. Give a rough plan and cross section, and measure up and estimate the cost of the roof over the building described in the previous question, supposing it to be open, with 7 kingpost trusses, slates on battens, and lead hip and ridge rolls. The eaves-gutters, and down pipes, to be included, and the pitch of the roof to be taken as one-third the span.

ASSISTANT TO SURVEYOR, OFFICE OF WORKS.

4. How are the following items of builder's work measured and paid for: brick cornices with neckings and dentil courses; double plain tile creasing in cement; raking and pointing to lead flashings; slate in cement damp courses; plaster cornices; painting window sashes, skirtings, and iron railings?

5. Measure up and estimate the cost of 50 feet run of the stone cornice and blocking course given below, taking the cube stone, and the labour on it, separately.

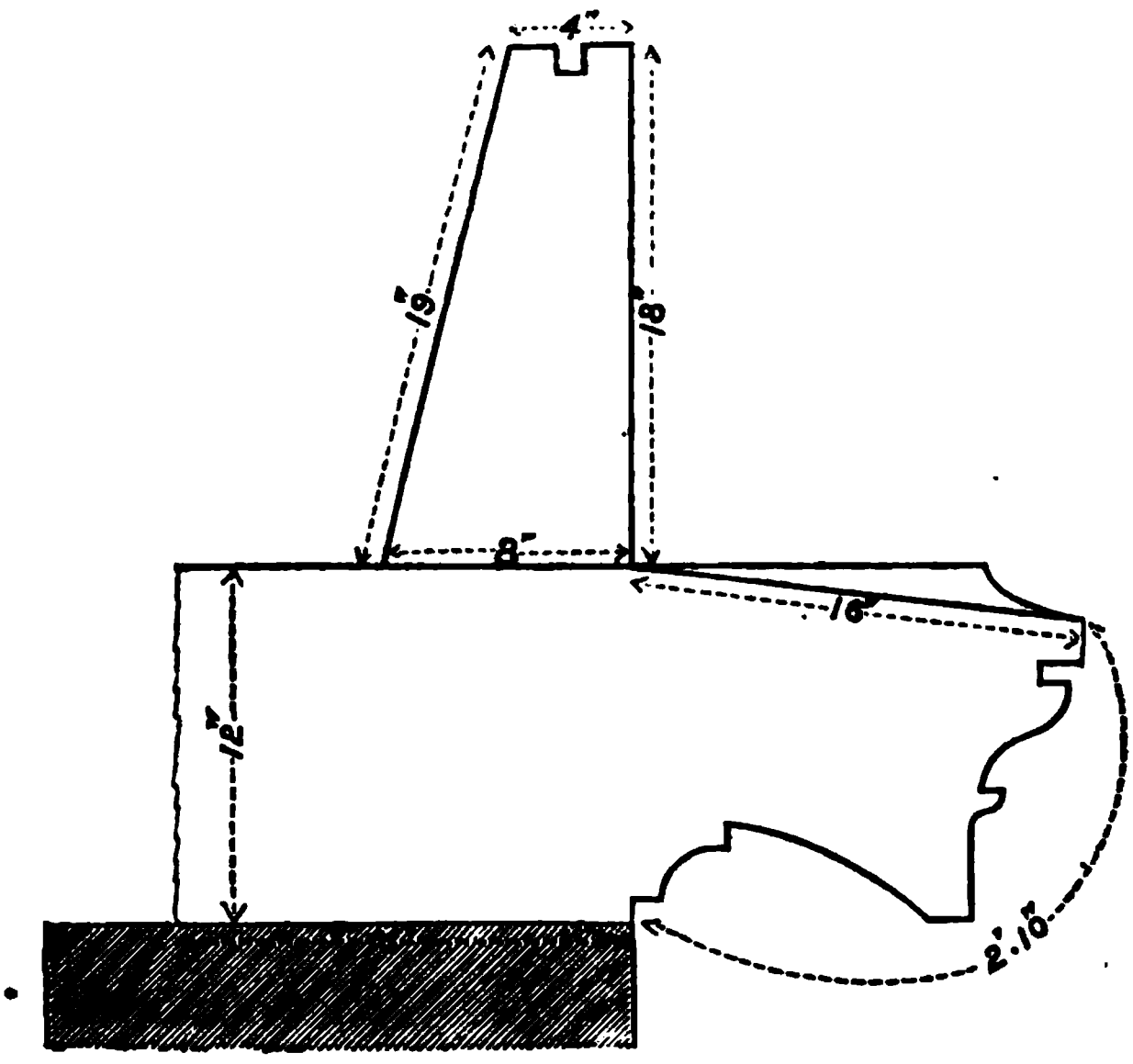

No. 5.—DRAINAGE AND WATER SUPPLY.

Time allowed, 3 hours.

Answers to be written on one side only of the paper.
The Candidate's name is to be written upon each piece of paper.

1. The drainage from a dwelling has to pass into a sewer which passes within 20 feet, and at a depth of 6 feet from the surface of the ground. Show, by a broken sketch section, how you would arrange this.

2. A main pipe sewer of 15 inches diameter, with a fall of $\frac{1}{100}$, is joined by a branch pipe of 9 inches diameter (fall $\frac{1}{80}$) whose general direction is at right angles to the main. Draw a plan and section of the junction, showing the pipes running half full.

3. What precautions would you take in the preparation of the site and in the construction of the lower portion of a dwelling to be erected on a damp clay soil?

ASSISTANT TO SURVEYOR, OFFICE OF WORKS.

4. What are the advantages of the constant, as compared with the intermittent system, of water supply?
5. Draw a sketch section illustrating the action of a ball cock in supplying a cistern from a pipe under low pressure.
6. Draw a sketch plan and section (with dimensions) of an underground tank, in gravel soil, to hold 20,000 gallons.

No. 6.—ARCHITECTURAL DRAWING.

Time allowed, 4 hours.

[NOTE.—*The drawings may be in pencil, but they should be coloured so far as time permits.*]

An additional wing is required to be built to an existing house under the following conditions:

The side wall of the house for a depth of 16 feet from the front angle is without windows, there is then the entrance door opening into a staircase hall 8 feet wide, and at a distance of 8 feet beyond the door are windows the light of which must not be seriously interfered with. On the first floor, over the door, is a window lighting a passage, which can be cut down to form a doorway giving access to the first floor of the new wing; thus no new staircase is necessary.

The accommodation to be provided is:

A drawing room not less than 320 sq. ft. in area	on ground floor.
New Entrance Hall	on ground floor.
Cloak room and lavatory	on ground floor.
Bed room with dressing room	on first floor.
Bath room and W.C.	on first floor.

Draw, to a scale of 4 feet to the inch, two plans, elevation of principal front, and transverse section.

No. 7.—CALCULATION OF THE STRENGTH OF GIRDERS, &c.

Time allowed, 3 hours.

Answers to be written on one side only of the papers.
The Candidate's name is to be written upon each piece of paper.
All calculations are to be shown.

1. A balcony 6 feet wide has to bear an uniformly distributed dead load of 2 cwt. per foot super. It is supported by cantilevers of Memel Fir, 3 feet from centre to centre. Calculate the scantling necessary for the cantilevers, for strength only, not for stiffness.
2. Point out the disadvantages of fixing a cast-iron girder at the ends.
3. Two half-inch wrought-iron plates, each 18 inches wide, and undergoing a tensile stress of 5 tons per square inch of their effective section, are united by a chain riveted lap joint.

   Calculate the number of $\frac{3}{4}''$ rivets that would be required to resist shearing and bearing, and draw a rough sketch plan of the joint.

4. A plate girder whose effective span is 36 feet, effective depth 3 feet, and width of flanges 18 inches, carries an uniformly distributed dead load of 4 tons per foot run of its length.

   Calculate and sketch the central section of the tension flange, and draw a longitudinal sketch elevation (with dimensions) of the same flange showing the lengths of the plates.

ASSISTANT TO SURVEYOR, OFFICE OF WORKS.

5. A straight pipe leading from a reservoir has to deliver 240 gallons per minute at a point 1,024 feet from the reservoir and 64 feet below the surface of the water in it. Find the diameter required for the pipe.

6. The upper portion of a high hollow cylindrical brick shaft is of 9-inch brickwork, 4½ feet external diameter, and 20 feet high. What wind pressure will it bear without overturning?

   The tenacity of the mortar is not to be considered. The weight of brickwork may be taken at 100 lbs. per foot cube.

No. 8.—LEVELLING AND CHAIN SURVEYING (OPTIONAL).

Time allowed, 3 hours.

1. The Diagram A on page 541, which is drawn to a scale of 4 chains to an inch, represents two roads to be surveyed with the chain only. Explain how you would proceed to do this, and rule a form of "Field Book," entering in it all the notes you would make in carrying out the survey. What lines would be necessary to chain only as "check lines" and "tie lines"?

2. Explain on what surveys a theodolite or some angular instrument is an advantage, and how its use is a saving of time and work. What difference would it make in surveying the roads shown by Diagram A?

3. What is the greatest length of offset you would take as a rule in making a survey to be plotted to a scale (1) of 6 chains to an inch, (2) of 30 feet to an inch?

4. Draw a small plan of a wood of irregular form, and show how you would survey it from the *outside* and determine its area. Show your calculations.

5. Explain fully the operation of levelling with the Dumpy Level. Why is it generally unnecessary to make allowance for the earth's curvature?

6. Make up the "Level Book," page 541, and check the columns. Plot the section to a horizontal scale of 2 chains to an inch and a vertical scale of 30 feet. What is the greatest inclination of the ground shown by the section?

7. Explain the different methods of enlarging and reducing plans, without the aid of any special instrument for the purpose.

ASSISTANT TO SURVEYOR, OFFICE OF WORKS.

LEVEL BOOK.

Back Sight.	Intermediate.	Fore Sight.	Rise.	Fall.	Total Height in Feet above Datum.	Total Distance in Links.	Remarks.
						Links.	
4·03					53·27		Ordnance Bench Mark.
	2·30					0	
	7·65					100	
9·98		8·49				290	
	6·80					465	
	5·95					530	
	5·00					680	
11·43		5·59				1000	
	9·70					1125	
	6·50					1355	
	4·00					1500	
		5·32					Temporary Bench Mark.
		19·40					

ASSISTANT TO SURVEYOR, OFFICE OF WORKS.

DIAGRAM A.

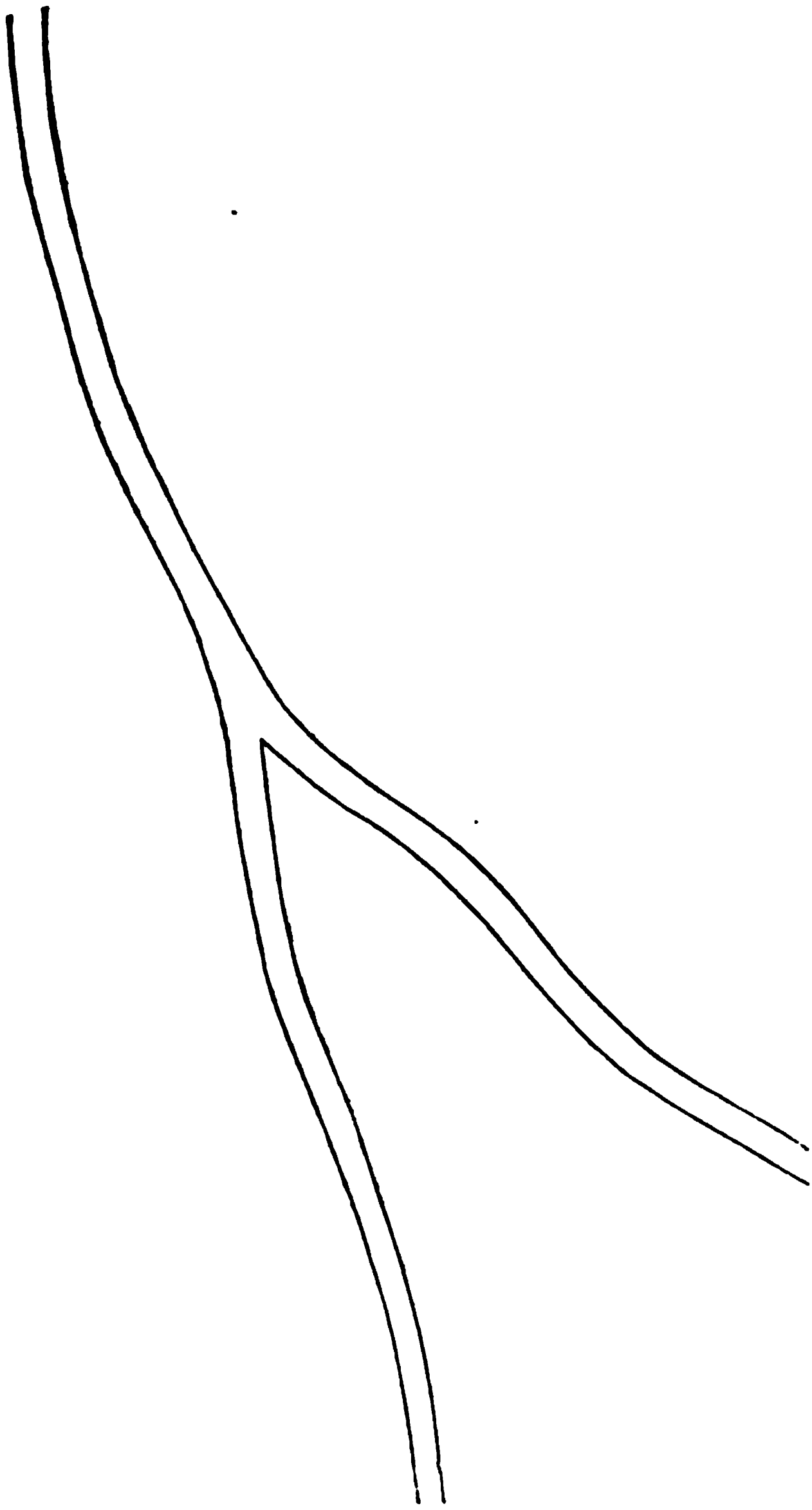

ASSISTANT TO SURVEYOR, OFFICE OF WORKS.

No. 9.—ENGINEERING DRAWING (OPTIONAL).

Time allowed, 4 hours.

Drawings to be on one side only of the paper.
The Candidate's name is to be written upon each piece of paper.

1. A circular turret stair affords communication between two floors 7′ 7″ apart. The staircase has an internal diameter of 7 feet, and the steps are of stone.

   Draw, colour, and shade a plan taken at the level of the top step looking downwards, also a vertical sectional elevation through the centre of the staircase.

   The door to the staircase on the upper floor is immediately above that upon the lower floor. The wall of the staircase is 18 inches thick.

   Scale, ½ inch to 1 foot.

2. Draw, colour, and shade an elevation, full size, of a 1½-inch bolt with cup-shaped head and hexagonal nut. The bolt is to be 4 inches long from the underside of the head.

N.B.—*The above drawings are to be very carefully done as specimens of your skill in drawing.*

No. 10.—RUDIMENTARY CHEMISTRY AND PHYSICS (OPTIONAL).

Time allowed, 3 hours.

1. In 100 cubic inches of dry atmospheric air how much oxygen is there? If the barometer stand at 30 inches and the tension of aqueous vapour in the air be ·75 inches, what will be the volume of the oxygen in 100 cubic inches?
2. Describe the preparation and the properties of (1) ammonia, (2) nitric oxide.
3. Name some compounds which consist of carbon and hydrogen only. Explain what results when these substances are set on fire; and show how each of the compounds produced in the burning may be detected.
4. What are the chief physical and chemical characters of sulphur? In what respect does it resemble oxygen? Explain how sulphuretted hydrogen is made.
5. State the chemical composition of caustic potash, rust of iron, bone earth, and chalk. Calculate how much chalk is required to neutralize a solution containing 146 grs. of hydrochloric acid. (O : Cl : C : Ca = 16 35.5 12 : 40.)

ASSISTANT TO SURVEYORS, OFFICE OF WORKS.

6. By what tests can you detect copper, lead, and calcium in solution? If you wanted to dissolve some copper what solvent would you employ, and what would be the chemical reaction?
7. Explain, and illustrate by some experimental facts, the diffusion of gases and the ordinary laws of diffusion.
8. Define density, fluidity, tenacity, and hardness. Which substance has the greatest density and which the greatest hardness? Explain how hardness is tested.
9. How can you distinguish a magnet from a magnetic substance? Give an example of magnetic induction. A steel bar held in a vertical position and tapped several times with a hammer acquires magnetism: explain this.
10. Describe some method of making ice artificially, and explain the principle of it.
11. Explain the different modes in which heat is transferred from one object to another. Does a slate or a bright tin plate get the hotter in sunshine, and why?
12. Define momentum and energy. What work is done by the fire of a locomotive drawing a train on a level road at a uniform pace? How much work (in foot pounds) must be done to quicken the pace of a train of 500 tons from 10 to 12 miles an hour on a level road?
13. Define centre of gravity, stable and unstable equilibrium. Show that the potential energy of position of a body at rest is a minimum or a maximum according as it is in stable or unstable equilibrium.
14. Explain the boiling of water, and why it takes place at a lower temperature when the barometer is low than when it is high.
15. A balance has one side heated more than the other so that the hotter arm of the beam is longer than the colder arm by $\frac{1}{100}$ of the length of the latter; find the error in weighing 700 grs. by it. Show that the correct weight may be found by weighing first in one pan and then in the other.
16. Show why, and by how much, a stone weighs less in water than in air. Show also whether the centre of gravity of the stone will be altered at all in position by immersing the stone in water.
17. State the laws of refraction of light at a plane surface. Explain why an object appears magnified when seen through a double convex lens.

ATTACHÉ IN THE DIPLOMATIC SERVICE.

VIII.—PAPERS SET TO A CANDIDATE FOR THE POST OF ATTACHÉ IN THE DIPLOMATIC SERVICE.

*** For specimens of papers set in *Dictation*, *see* page 472; for *Précis*, *see* page 474; for *Latin Translation*, *see* page 477; for *Translation from and into French*, *see* page 480.

ARITHMETIC (Elementary).

Time allowed, 1¼ hours.

1. Write down in words 40006584.
2. Write down in figures Four hundred million one hundred and three thousand and eighteen.
3. Write down in words 201540012.
4. Add together—

	537648
	48535
	1478
	568742
	46749
	605062
Insert the answer	

5.—

£	s.	d.
458	16	7½
8650	7	8¼
540	14	6
476	2	10
69	14	7¾
987	13	11¼

6.—

From	24676459
Take	19829361
Insert the answer	

7.—

£	s.	d.
254715	16	8½
147368	19	5¾

The following questions are to be answered in the order in which they are set, and the working is to be shown up:

8. Multiply 980156 by 1078.
9. Divide 4536217 by 56.
10. Multiply 754960 by 97003.
11. Divide 9264357 by 857.
12. Multiply £37948. 15*s*. 6¾*d*. by 12.
13. Divide £644378. 10*s*. 8*d*. by 16.
14. Multiply £9045. 12*s*. 7¼*d*. by 63.
15. Divide £3069452. 11*s*. 4½*d*. by 843.
16. Multiply £39587. 11*s*. 7¼*d*. by 682.
17. Divide £1081411. 0*s*. 1*d*. by 524.

ARITHMETIC (2.)

Time allowed 1 hour.

Add together 9·759436, ·6624, ·00441, and 50·6087.
Subtract 48·6979 from 63·302.
Multiply 64·508 by 8·407.
Divide 17·82 by 67·5.

Express ·0735 of a bushel in pints and the decimal of a pint.
Add together 65·8073, 9·376, ·00403, 177·42, and 27·03067.
Subtract 15·9543 from 25·07865.
Multiply 54·3709 by ·00685.
Divide 31 by ·0248.
Reduce $\frac{2}{3}$ of 17*s.* 3*d.* to the decimal of £4. 12*s.*
Add together ·239 of £1. 5*s.* and 1·15 of 3*s.* 6*d.*, and give the answer in pence and the decimal fraction of a penny.
Subtract ·031 of a day from 1·035 of an hour, and give the answer in minutes and the decimal fraction of a minute.
Multiply 40·987 by 3·0065.
Divide 148·73 by 69500.
Reduce 7oz. 1dwt. to the decimal of a lb. troy.

GEOGRAPHY.

Time allowed, 2½ hours.

1. On the accompanying outline map delineate, with names, the chief mountains of Italy, Austria, and Turkey, and the chief rivers with their most important tributaries, as distinctly and as completely as you can.
2. Write a geographical description of Georgia, Switzerland, and Peru.
3. Describe as fully as you can the course of the Thames, Tweed, and Blackwater; mentioning in proper order the chief tributaries of each, the counties through which it flows, and any remarkable places on its banks.
4. Where are the following places; to whom do they belong; and for what are any of them remarkable?—Stornoway, Oviedo, Bologna, Djedda, Upsala, Agra, Valparaiso, Ostend, Riga.
5. Give an account of some of the principal ocean currents.
6. Where are Dalmatia, Alaska, Fezzan; the rivers Yenisei, Tornea, Colorado; Lakes Baikal, Tanganyika; Cape Leeuwin, Cape Agulhas?
7. Draw a map, as large as your paper will permit, of South America; trace the course of the chief rivers which flow through it, and (with dotted lines) the boundaries between the different states which compose it; and mark the position of the chief town of each state.

LATIN GRAMMAR.

1. In what senses is ut used with the indicative mood? Give examples.
2. Give the perfect indicative, present infinitive, and supine of the following verbs:—percello, fido, nubo, alo, fateor, nitor, meto, lino, sino.
3. Mention Latin verbs which govern two accusatives, and give examples.
4. State and illustrate the use of the supines in um and u.
5. Give the meaning and derivation of bustum, celsus, fulmen, præcipuus, sella, luna, retrorsum, vortex, versutus.

ATTACHÉ IN THE DIPLOMATIC SERVICE.

FRENCH GRAMMAR.

Time allowed 2 hours.

1. Écrivez le pluriel des substantifs—le *succès*, le *neveu*, la *voix*, le *nez*, le *bijou*, le *clou*, le *canal*, le *bal*, le *détail*.
2. Donnez le féminin correspondant aux substantifs masculins—*Dieu*, *héros*, *ambassadeur*, *gouverneur*, *chanteur*, *pécheur*, *pêcheur*, *compagnon*.
3. Dans quel sens doit-on employer les substantifs suivants tantôt au masculin et tantôt au féminin: *aigle*, *couple*, *enfant*, *foudre*, *hymne*.
4. Expliquez la règle concernant le mot *quelque*, selon qu'il est suivi d'un verbe ou d'un adjectif, et citez des exemples de chaque cas.
5. Donnez par des exemples la distinction qu'il faut établir entre les prépositions *vers* et *envers*, *avant* et *devant*.
6. Rendez en Français la phrase suivante:—
   Your country house is one of the best situated that I have seen; it reminds me of that beautiful place where I stopped and the delightful gardens I have passed through.
7. Donnez les temps primitifs des verbes suivants: *vouloir*, *boire*, *valoir*, *ouvrir*, *envoyer*.

EUCLID, BOOK I.

Time allowed, 1½ hours.

1. Define a circle, a rhombus, parallel straight lines, and write out Euclid's postulates.
2. From a given point draw a straight line equal to a given straight line.
3. Describe a triangle having its sides equal to three given straight lines. What condition is required in order that this may be possible? Show how the construction will fail if the condition is not observed.
4. Parallelograms upon the same base and between the same parallels are equal to one another.
5. In any right-angled triangle the square which is described upon the side subtending the right angle is equal to the squares described upon the sides which contain the right angle.

CONSTITUTIONAL HISTORY (BLACKSTONE AND HALLAM).

Time allowed, 3 hours.

1. What were the chief provisions of Magna Charta? What evils was Magna Charta intended to remedy? Account for its frequent confirmations.
2. When was the first Parliament in a complete form summoned? What traces of a representative system are to be found previously?
3. Show the importance in constitutional history of the reign of Richard the Second.
4. How is the present liberty of a British subject protected?
5. Give a brief sketch of the English law regarding *aliens*, *denizens*, and *naturalised* subjects.
6. Notice any occasions on which the two Houses of Parliament came into collision in the 17th century.

7. Give a history of villenage.
8. What purpose was served by impeachments? How are impeachments conducted? Notice some of the contested points in the law regarding impeachments.
9. How is the independence of judges and juries secured?
10. Describe the machinery and political consequences of local self-government in England.

POLITICAL HISTORY (1815-1860).

Time allowed, 3 hours.

1. Give an account of affairs in France from the Second Peace (1815) to the death of Louis XVIII. (1824).
2. What was the origin of the Greek insurrection (1820)? Under what circumstances was the battle of Navarino fought (1827), and what were the motives and objects of the protecting powers in the settlement they made?
3. Give an account of the war between Russia and Turkey which terminated in the Peace of Adrianople (1829).
4. Describe the military operations of Espartero which preceded and led to the convention of Vergara.
5. Compare the policy, foreign and domestic, of M. Thiers with that of M. Guizot.
6. What causes led to the collapse of the National Movement in Germany in 1848?
7. When and how was Belgium made a separate kingdom?
8. What were the chief incidents of the Polish insurrection (1830–32)?
9. Write a biography of the Emperor Nicholas.

POLITICAL ECONOMY (ADAM SMITH AND MILL).

Time allowed, 3 hours.

1. What conditions must an article fulfil in order to have an exchange value?
2. Notice some of the effects of converting circulating into fixed capital.
3. Is the profit arising from capital spent in improving land properly spoken of as rent?
4. What are the causes which determine the price of agricultural produce?
5. Which is more profitable, production on a large scale or production on a small scale, and why?
6. Under what circumstances and to what extent is there a premium on bills of exchange?
7. What would be the effect if the issue of bank notes were discontinued in England?
8. Is it true that a nation the imports of which greatly exceed the exports must be living on its capital?
9. How is equality of taxation best secured?
10. What was meant by the Mercantile Theory? In what particulars was it erroneous?

THIRD SECRETARY IN THE DIPLOMATIC SERVICE.

IX.—PAPERS SET TO A THIRD SECRETARY IN THE DIPLOMATIC SERVICE NOMINATED FOR EXAMINATION FOR A SPECIAL CERTIFICATE IN PUBLIC LAW.

PUBLIC LAW.*

PAPER I.

1. Is the tendency of the authority of International Law to grow stronger or weaker?
2. A recent Act of Parliament has given English Tribunals jurisdiction over all ships passing through English territorial waters. If a foreign State protested against this Act as infringing International Law, what books and documents would it be proper to study in order to frame a reply on behalf of England?
3. In what ways does the constitution of the German Empire affect its international relations?
4. Examine the origin, history, and consequences of the capitulations with the Porte and its Tributaries.
5. Give instances showing when a government ought, and when it ought not, to interfere to protect its subjects abroad.
6. Give a summary of the present English Law with regard to naturalization.
7. What steps must a Frenchman who wishes to be married in England take in order that his marriage here may be treated as valid in France?
8. If an Englishman residing in Paris made there a holograph will, would his property in England pass under it?

PAPER II.

9. What is the rule of International Law as to the position of neutral vessels sailing under an enemy's convoy?
10. Are there any recognised limits to the right of a belligerent to levy contributions and requisitions on the inhabitants of an invaded country?
11. Give examples of cases in which the local jurisdiction prevails over a foreign ship of war.
12. What is now recognised as the proper mode of treating Prisoners of War?
13. What are the chief points which a competent tribunal has to consider and decide when a prize is brought before it for condemnation?
14. Give historical instances showing the circumstances and the mode in which resort may be had to reprisals.
15. What is meant by setting forth a ship as a vessel of war?
16. "Every lawfully declared war is to be regarded as just on both sides." What did Vattel mean by this statement?
17. Was the detention by Napoleon of the English who happened to be in France at the opening of the war of 1803 contrary to the rules of International Law?

---

* For syllabus of subjects and text books, *see* p. 72.

APPENDIX VIII.

		Page
Correspondence relating to the Home Civil Service - - - -		550
„ „	Military Entrance Examinations - - -	570
„ „	the Civil Service of India - - - -	595

CORRESPONDENCE.

HOME CIVIL SERVICE.

LOWER DIVISION.

Lower Division.

Appointment of Lower Division Clerks for temporary Duty.

The Secretary, Civil Service Commission, to the Secretary, Treasury.

Sir, 31st January 1878.

The Civil Service Commissioners having lately been called upon to supply, in accordance with Clause 9 of the Order in Council of 12th February 1876, a clerk of the Lower Division for "temporary duty" until 31st March next, I am directed to inquire, for their guidance in dealing with similar applications, whether it is the intention of the Lords of the Treasury that the time spent in such temporary duty shall be reckoned as part of the period in respect of which the triennial increments of salary authorised by Clause 13 of the Order are to be paid.

This question, it will readily be seen, is material to the action of this Board and to the convenience of the Departments requiring the temporary services of Lower Division clerks; for unless the time referred to is to be thus reckoned, the Commissioners would feel bound, in justice to the clerk, to withdraw him from the Department in which he might be serving if, before the completion of his service therein, his turn should arrive for receiving a permanent appointment in the order of his name on the list. This course, which would, no doubt, cause some embarrassment to the Department concerned, the Commissioners would not deem it necessary to follow if his continued service in a temporary capacity placed him at no disadvantage, but they would appoint him to the next vacancy which might occur after the termination of his temporary engagement.

I have, &c.

The Secretary, Treasury, to the Civil Service Commissioners.

My Lord and Gentlemen, 7th February 1878.

The Lords Commissioners of Her Majesty's Treasury have had before them Mr. Mann's letter of the 31st ultimo, stating that you have lately been called upon to supply, in accordance with Clause 9 of the Order in Council of the 12th February 1876, a clerk of the Lower Division for temporary duty until the 31st March next, and inquiring whether the time spent in such temporary duty is to be reckoned as part of the period in respect of which the triennial increments of salary authorised by Clause 13 of the Order are to be paid.

Lower Division.

Appointment of Lower Division Clerks for temporary Duty.

I am, in reply, to state that as long as clerks of the Lower Division are employed upon the class of duties intended to be performed by such clerks, and are paid on the scale prescribed by Clauses 13 and 14 of the Order in Council of 12th February 1876, the time of such employment may count towards their triennial increments in whatever office they may be employed.

I am to observe that the certificates required by Clause 14 would have to be given by the authorities of each of the Departments in which the clerk had been employed during the triennial period.

I am to observe further that in assigning a Lower Division clerk to any Department in which his next increment would accrue before the end of three years, it would be proper to give notice to the heads of it, whose vote, if they accepted him, would have to answer the entire charge.

The present letter has no application to the service of Lower Division clerks, not yet posted to any establishment, who may choose to offer their services as registered writers pursuant to the Treasury letter dated the 9th of June 1877.*

I have, &c.

The Secretary, Civil Service Commission, to the Secretary, Treasury.

Sir, 9th July 1878.

Shorthand.

I am directed by the Civil Service Commissioners to transmit to you, for the information of the Lords Commissioners of Her Majesty's Treasury, a copy of a correspondence which has taken place between the Board of Trade and themselves on the subject of selecting for service in that Department a man clerk of the Lower Division well qualified as a shorthand writer.

It will be seen that the Commissioners do not consider it to be within their competence to adopt the suggestion contained in the last letter from the Board of Trade, but they have thought it right to bring the matter under the notice of their Lordships for such consideration as it may seem to them to deserve.

I have, &c.

Enclosure 1.

Sir, Board of Trade, 24th June 1878.

I am directed by the Board of Trade to request you to move the Civil Service Commissioners to be so good as to assign a man clerk of the Lower Division to this Department before the 24th of July next.

I am also to state that it is essential that the clerk selected should be a good shorthand writer, and to suggest, if the Commissioners have not any person on their list possessing this qualification, that they should take the necessary steps for holding an examination for the appointment in question.

I am, &c.

The Secretary,
Civil Service Commission.

(Signed) Henry G. Calcraft.

Enclosure 2.

Sir, Civil Service Commission, 27th June 1878.

In reply to your letter of the 24th instant, requesting that a man clerk of the Lower Division who is a good shorthand writer may be assigned to the Board of Trade before the 24th of July next, and suggesting that if the Commissioners have not any person on their list possessing the required qualification they should take the necessary steps for holding an examination for the appointment in question,

---

* *See* p. 550 of the Appendix to the 22nd Report of the Civil Service Commissioners.

LOWER DIVISION. —— Shorthand.

I am directed by the Civil Service Commissioners to acquaint you, for the information of the Board of Trade, that no men clerks of the Lower Division are at present awaiting appointment. An examination has, however, recently been held, on the results of which a considerable number of men clerks will shortly be selected. It is possible that one of these persons may prove to have some facility in writing shorthand, and the Commissioners will take measures to ascertain whether this is the case. With reference, however, to your request that a clerk possessing this knowledge may be assigned to your Department, I am to point out that by section 9 of the Order in Council of 12th February 1876* the Commissioners are obliged to make their selection according to the order of the names on the list, except in a case where a clerk has shown special qualifications in some particular subject included in the prescribed examination.

As shorthand is not one of these subjects the Commissioners are precluded from making an acquaintance with it a ground for departing from the ordinary course of selection. If, however, one of the men clerks about to be selected should prove to be possessed of the qualification required, the Commissioners would be able to assign him for service in the Board of Trade as soon as all above him on the list had received appointments. In the meantime it could probably be arranged that he should serve as a copyist.

With reference to the last clause of your letter, I am to refer you to Clause 6 of the above-recited Order in Council, from which it will appear that the Commissioners are unable to hold a special examination for the purpose of filling a particular vacancy in the "Lower Division" of the Civil Service.

I have, &c.

H. G. Calcraft, Esq., Assistant Secretary, Board of Trade. (Signed) HORACE MANN.

ENCLOSURE 3.

SIR, Board of Trade, 2nd July 1878.

I AM directed by the Board of Trade to acknowledge the receipt of your letter of the 27th ultimo, stating that shorthand writing is not one of the subjects prescribed for men clerks of the Lower Division, and the Civil Service Commissioners are therefore precluded from making an acquaintance with it a ground for departing from the ordinary course of appointing these clerks according to the order of the names on the list.

I am to point out to the Commissioners the serious inconvenience which may be caused to a Department wishing for a clerk with a special qualification by the terms of the Order in Council of 12th February 1876, and to suggest that it might be possible for the Commissioners to make shorthand one of the subjects or extra subjects for examination, in which case the possession of this qualification might be made a condition of appointment to any office which requires a shorthand writer.

I am, &c.

The Secretary, Civil Service Commission. (Signed) T. H. FARRER.

ENCLOSURE 4.

SIR, Civil Service Commission, 9th July 1878.

I AM directed by the Civil Service Commissioners to acknowledge the receipt of your letter of the 2nd instant, in which it is suggested that the Commissioners might make "shorthand" one of the subjects or extra subjects of examination in competitions for clerkships of the Lower Division.

In reply, I am to state, for the information of the Board of Trade, that, having regard to the 5th clause of the Order in Council of 12th February 1876, it does not appear to the Commissioners to be competent to them to propose, or to the Lords of the Treasury to approve, the introduction at these competitions of any subjects or extra subjects which were not "included in the scheme of examination known as "Regulation II."

They are, however, very sensible of the inconvenience which might be caused to a Department in such a case as that to which you refer, and they have therefore given directions for bringing the matter under the notice of the Lords of the Treasury, to whom a copy of this correspondence will be forwarded.

I have, &c.

The Secretary, Board of Trade. (Signed) HORACE MANN.

---

* *See* p. 15.

The Secretary, Treasury, to the Civil Service Commissioners.

LOWER DIVISION.

MY LORD AND GENTLEMEN, 29th July 1878.

Shorthand.

WITH reference to your letter of the 9th instant and its enclosures, on the subject of selecting for service in the Board of Trade a Lower Division clerk well qualified as a shorthand writer, I am directed by the Lords Commissioners of Her Majesty's Treasury to state that (with the exception of the office of the Parliamentary Counsel) my Lords are not aware of any Department in the public service where the power to write shorthand is required among the qualifications of candidates for admission to the permanent establishment, and that they have not been informed of the reasons why this exceptional qualification is required at the Board of Trade.

My Lords agree with your Board in holding that the special qualifications mentioned in Clause 9 of the Order in Council of 12th February 1876 are thereby limited to the subjects of examination defined by Clause 5 of the same Order.

I have, &c.

The Secretary, Civil Service Commission, to the Secretary, Board of Trade.

SIR, 31st July 1878.

ADVERTING to my letter of the 9th instant, and to previous correspondence relative to the suggestion of the Board of Trade, that shorthand might be made a subject of examination in competitions for clerkships of the Lower Division of the Civil Service,

I am directed by the Civil Service Commissioners to transmit for the information of your Board the accompanying copy of a letter, dated the 29th instant, which the Commissioners have received from the Lords Commissioners of Her Majesty's Treasury on the subject.

I have, &c.

The Under Secretary of State, War Office, to the Secretary, Civil Service Commission.

SIR, 7th December 1878.

Functions of Commissioners in re-assigning rejected clerks.

WITH reference to your letter of the 4th instant, stating that boy clerks A. and B. had been selected for employment in the Army Clothing Depôt, I am directed by Secretary Colonel Stanley to request that you will move the Civil Service Commissioners to acquaint him with the reasons why these boy clerks left the Post Office, in which Department he understands they were previously employed.

I am, &c.

LOWER DIVISION.

Functions of Commissioners in re-assigning rejected clerks.

The Secretary, Civil Service Commission, to the Under Secretary of State, War Office.

SIR, 12th December 1878.

IN reply to your letter of the 7th instant, conveying the request of Colonel Stanley that he may be informed of the reasons why the boy clerks A. and B. recently selected for employment in the Army Clothing Department left the Post Office in which they had previously been employed,

I am directed by the Civil Service Commissioners to state that, for reasons which they doubt not will commend themselves to the Secretary of State, they do not feel at liberty to supply the information desired.

The selection of these boy clerks for service in the Army Clothing Department after their rejection by the Post Office was made in accordance with clause 10 of the Order in Council of 12th February 1876, which provides "that when a clerk is not accepted by a Department, "that Department shall report to the Civil Service Commissioners the "reasons for not accepting him; and such Commissioners shall . . . . "decide whether the name of the rejected clerk shall be struck off the "list as unfit for the service generally, or whether he shall be allowed "a trial in another Department."

The Civil Service Commissioners being thus entrusted with the judicial function of deciding on a clerk's fitness, under the circumstances, for further service, it appears to them that their judgment upon this point could not, without grave inconvenience, be submitted for review by the Department to which such clerk may be allotted for further trial. On the other hand, the head of such Department is provided with a remedy against the possible appointment of unfit persons; power being given to him by the same clause of declining to accept them if, after sufficient trial, they should prove to be unsuitable.

Similarly, under the Orders in Council of 21 May 1855 and 4 June 1870 the question of a candidate's fitness to be admitted on probation to the public service is left for the Civil Service Commissioners alone to determine, and they have always felt it incumbent upon them to decline to reveal the grounds upon which their decisions were based.

In the present case the Commissioners are far from supposing that your application is made with any desire to review their decision, but they feel that they could not supply the information requested without appearing to abandon the position they have uniformly held, or without creating a precedent which might embarrass them in dealing with similar applications from other quarters hereafter.

I have, &c.

The Comptroller and Auditor General to the Secretary, Civil Service Commission.

LOWER DIVISION.

SIR, 27th June 1878.

Reports on Probation, within what time to be made.

I AM directed by the Comptroller and Auditor General to acknowledge the receipt of your letter of the 14th instant, * * * making certain observations upon the means to be taken for ensuring the due observance of Clause 10 of the Order in Council of the 12th February 1876.

I am to acquaint you in reply, for the information of the Civil Service Commissioners, that, independently of the question of the part to be taken by the Commissioners in the matter, the Comptroller and Auditor General, according to his interpretation of the above clause, considers that it is imperative upon the heads of Departments to signify to the Civil Service Commissioners within the period of 12 months either their acceptance or rejection of a Lower Division clerk, and he therefore will be unable to admit the payment of salary by any department to a Lower Division clerk for more than 12 months unless he receives information that such Lower Division clerk has been accepted by that Department.

* * * * *

I am, &c.

The Secretary, Treasury, to the Civil Service Commissioners.

MY LORD AND GENTLEMEN, 12th November 1878.

WITH reference to Mr. Mann's letter of the 5th instant, relating to the case of Mr. ——, late a clerk of the Lower Division in the —— —— Department, I am directed by the Lords Commissioners of Her Majesty's Treasury to acquaint you that, in the opinion of this Board, the year spoken of in the first paragraph of Clause 10 of the Order in Council of 12th February 1876 is a year of time (simply), to be reckoned from the date at which the clerk begins to be paid a salary, and that, at the end of such year, the clerk ceases, *ipso facto*, to be qualified to receive his salary unless and until the head of his Department has signified in writing to your Commission that the clerk is accepted.

Of course, as the said year has to expire before such acceptance can be signified, the acceptance, when signified, must be allowed to have retrospective effect.

My Lords are furnishing to the Comptroller and Auditor General a copy of this correspondence, and he will doubtless cause attention to be drawn to any cases in which there has been unreasonable delay in signifying acceptance.

It has already been ruled that it is not necessary to wait for the end of a year before signifying non-acceptance.

* * * * *

I am, &c.

COLONIAL OFFICE.

HONG KONG CADETS.

New Regulations.

ENCLOSURE.

HONG KONG CADETSHIPS.

WITH a view to supply Interpreters and other Civil Officers in Hong Kong, Cadetships have been established, the holders of which are required to devote themselves for a certain time to learning the Chinese language.

The Cadets are selected after a competitive examination by the Civil Service Commissioners, from amongst candidates nominated by the Secretary of State.

Applications for nominations, proceeding from persons of whom the Secretary of State has no direct knowledge, should be accompanied by recommendations from persons known to him, or occupying positions of professional or other distinction.

2nd. Each candidate must be between the ages of 20 and 23 on the first day of the examination, and must satisfy the Civil Service Commissioners that he is duly qualified in respect of health and character. The medical examination does not ordinarily take place until the result of the competition is known, but candidates may, by application to the Civil Service Commissioners, obtain permission to undergo it earlier.

3rd. The heads of examination are as follows:—

A. *Obligatory.*

1st. Exercises designed to test handwriting and orthography.
2nd. Arithmetic, including vulgar and decimal fractions.
3rd. Latin, and one of the following languages:—Greek, French, German, Italian.
4th. English composition, including précis writing.

B. *Optional.*

5th. Pure and mixed mathematics.
6th. Ancient or modern history, and geography.
7th. The elements of constitutional and international law, and political economy.
8th. Geology, civil engineering, and surveying.

Every candidate must show a competent knowledge of the first four subjects, and may select any two of the optional subjects.

As at present arranged, a Cadet after his appointment will remain for one year in this country, and will be required to begin learning Chinese and to attend a class for students of Chinese at King's College; he will also be employed during some hours daily at the Colonial Office in the work of the Department. At the end of his year's study in this country the Cadet will be examined in Chinese, and the confirmation of his appointment will depend upon his passing a satisfactory examination, and on his performance of his duties in the office.

4th. Each cadet will receive salary at the rate of 100*l.* a year while studying in this country and a salary of $1,200 a year from the date of his arrival in the Colony. The cost of his passage to the Colony will be paid, subject to the liability of repayment hereafter mentioned (secs. 8, 9).

5th. After arrival in Hong Kong he will be required to continue his study of the language.

6th. While thus studying, he will be under the control and supervision of the Governor of the Colony, who will frame regulations for his hours of study and general duties. Quarters, books, and teachers will be provided for him at the public expense, and he will be required to attend at the public offices for not less than two hours daily, while he is continuing his reading.

7th. As soon as he is declared by a board of examiners to have acquired a competent knowledge of Chinese, he will be employed either as an interpreter or in such Department as may require his services, at a salary of $1,800 per annum, without other allowances, and will be considered eligible for promotion in the Civil Service of Hong Kong on the occurrence of any vacancy which he may be deemed suitable to fill.

8th. The progress of the Cadet will be tested by half-yearly examinations, and he will be liable to be dismissed without further pay, if he does not pass his final examination (see section 7) within such time as may be fixed, or if at any time his progress or conduct shall be considered by the Governor and Executive Council to be so unsatisfactory as to render such a course desirable. The Governor and Council will decide, having regard to the ground of dismissal, whether the Cadet shall be sent home at the public expense, or shall be left to find his own way home, or shall be, in addition, called upon to repay the cost of his passage out.

COLONIAL OFFICE.

HONG KONG CADETS.

New Regulations.

9th. A bond must be entered into by the Cadet and his friends at home with the Crown Agents for the Colonies to secure the repayment of the cost of the passage out, in the event of his dismissal and of its being decided by the Governor and Executive Council that such repayment shall be enforced; and also in the event of the Cadet within four years from the date of his arrival in Hong Kong either quitting the Colony without leave or relinquishing his appointment (except for ill health), together with a further sum of 50*l.* for each year to repay the Colony the cost of his teaching, up to his leaving.

The $ is at present reckoned in Hong Kong for purposes of pension and half-pay at 4*s.* 2*d.*

Colonial Office, July 8th, 1878.

CONSTABULARY, IRELAND.

CONSTABULARY, IRELAND.

Competitive examination of Constables for promotion.

The Inspector-General, Royal Irish Constabulary, to the Secretary, Civil Service Commission.

SIR, 23rd August 1878.

I BEG to inform you that his Grace the Lord Lieutenant has approved that the competitive system of examination be adopted in the Royal Irish Constabulary for the selection of Constables for promotion to a certain proportion of vacancies in the rank of Head Constable. His Grace has also approved of the Inspector-General seeking the co-operation of the Civil Service Commissioners for the furtherance of this matter. It is intended to hold an annual competitive examination at which about 50 constables will be examined.

The following will be the subjects of examination and the maximum number of marks for each subject :—

1.	Arithmetic : the first four rules (simple and compound), proportion, vulgar and decimal fractions - - - -	170
2.	Separate compound addition - -	30
3.	Geography of the British Isles - -	100
4.	Composition - - - -	150
5.	Handwriting - - - -	100
6.	Orthography and writing from dictation -	100
7.	Police duties (written examination) -	100
8.	Finance regulations (written examination)	50
9.	General intelligence at *vivâ voce* examination in police duties - - -	200
	Total - - -	1,000

It is proposed, should your Commissioners approve of the arrangement, that the examination in subjects 1 to 6 be conducted by your Department. The examination in subjects 7, 8, and 9 will be conducted in this office by a board of superior officers of the force. For this portion of the examination the Inspector-General will not require any assistance from your Department. Upon receiving the report of your Board of the marks of the several competitors, the marks of the Constabulary Board for subjects 7, 8, and 9 will be added, and the names of successful

CONSTABULARY, IRELAND.

Competitive examination of Constables for promotion.

Constables will be placed in a register in this office, from which selections for promotion will be made of those having the highest total marks. A Constable who fails to obtain one-third of the marks allotted to any one of the subjects, or whose total marks are less than half the maximum number (1,000), will be disqualified. It will not be necessary for your Department to summon the Constables for attendance at the examination, or to communicate to them the result thereof. Upon the Inspector-General arranging with the Commissioners the day and place (in Dublin) for examination, the Constables will be summoned by this Department to attend, and a list of the names will be furnished to you. After the examination by your department it is proposed that the result be reported to the Inspector-General in one general return, setting forth the names of the Constables and the marks obtained by them in each subject. It is proposed to hold the first examination in November or December next, as may be arranged.

In considering this proposed scheme, should the Civil Service Commissioners require any further information on the subject, I shall be most happy to furnish it.

I am, &c.

The Secretary, Civil Service Commission, to the Inspector-General, Royal Irish Constabulary.

SIR, 10th September 1878.

I AM directed by the Civil Service Commissioners to acknowledge the receipt of your letter of the 23rd August, requesting the Commissioners to undertake the examination in certain subjects of Constables who may be nominated for promotion to the rank of Head Constable.

In reply, I am to acquaint you that the Commissioners will readily give their assistance in the manner proposed.

I am to add that the Commissioners will be prepared to hold the first of these examinations in November or December next, as may be arranged, and that when the time approaches they will await a further communication from your Department as to the precise date which might most conveniently be fixed.

In regard to the subjects of examination, the Commissioners have only to observe that they will, unless they hear that such is not the wish of the Lord Lieutenant, assume that candidates may be considered to be qualified in arithmetic who on the two papers, 1 and 2, taken together shall have obtained one-third of the maximum (*i.e.*, 66 out of 200).

Under the sixth head, the mention of orthography as distinct from writing from dictation might appear to imply that spelling would be tested partly by an "orthography" or misspelt paper. As this is no longer the practice of the Commissioners in such cases, they would suggest that the words "and writing from dictation" be omitted; and they would judge of handwriting and orthography principally by the writing from dictation, and partly by the other papers.

I have, &c.

The Inspector-General, Royal Irish Constabulary, to the Secretary, Civil Service Commission.

SIR, 11th September 1878.

I HAVE to acknowledge the receipt of your letter of the 10th instant, respecting the proposed examination of Constables nominated

for promotion to the rank of Head Constable, and to inform you that I approve of both the suggestions made therein. As regards the 6th head, I have struck out the words "and writing from dictation" in the orders about to be issued by me to the Constabulary.

I shall notify to your Department in due time the date which may be fixed as most convenient for the examination.

I am, &c.

CONSTABULARY, IRELAND.

Competitive examination of Constables for promotion.

EXCHEQUER AND AUDIT DEPARTMENT.

EXCHEQUER AND AUDIT DEPARTMENT.

The Chief Clerk, Exchequer and Audit Department, to the Secretary, Civil Service Commission.

As to necessity for a fresh certificate on reinstatement.

SIR, 17th June 1878.

I AM directed by the Comptroller and Auditor General to inform you that, in the course of the examination of the Post Office Telegraph Account, 1877–8, in this Department, it has been observed that Mr. X —— Y ——, a clerk in the Central Telegraph Station, who received a certificate of the Civil Service Commissioners on the 10th September 1874, was appointed to the major establishment of the Post Office on 14th November 1874, and resigned his appointment on 27th April 1877, "was reinstated in his former position in the Central Tele-" graph Station on 10th December 1877."

I am to request that the Comptroller and Auditor General may be informed whether the reinstatement of Mr. X —— Y —— has been reported to the Civil Service Commissioners, and if not, whether in their opinion a reinstatement of this nature would require their certificate.

I have, &c.

The Secretary, Civil Service Commission, to the Secretary, General Post Office.

SIR, 25th June 1878.

I AM directed by the Civil Service Commissioners to transmit, for the information of the Postmaster-General, the enclosed copy of a letter which has been received from the Comptroller and Auditor General on the subject of the reinstatement of Mr. X —— Y —— in the Telegraph Department.

And I am to state that the Commissioners would be glad to be informed whether there are any circumstances connected with the case which may have led the Postmaster-General to consider that a fresh certificate was not required on the occasion of Mr. X —— Y ——'s re-appointment.

I have, &c.

The Secretary, General Post Office, to the Secretary, Civil Service Commission.

SIR, 28th June 1878.

IN reply to your letter of the 25th instant, respecting the reinstatement of Mr. X —— Y —— as a telegraphist in the Central Station, I beg leave to inform you that in April last, his health having broken down, he resigned in order to recruit it on the continent, and on his recovering, to which fact the medical officer certified, he was reinstated,

EXCHEQUER AND AUDIT DEPARTMENT.

his case being looked upon as one of a person absent on sick leave, as such leave would have been granted him had he applied for it instead of resigning.

As to necessity for a fresh certificate on reinstatement.

Under these circumstances, I am instructed to acquaint you, for the information of the Civil Service Commissioners, that the Postmaster-General did not consider the reinstatement of Mr. X —— Y —— to be a case that required reference to them.

I am, &c.

The Secretary, Civil Service Commission, to the Comptroller and Auditor-General.

SIR, 24th July 1878.

IN reply to your letter of the 17th June, relative to the case of Mr. X —— Y ——, I am directed by the Civil Service Commissioners to acquaint you that, as Mr. X —— Y ——'s resignation in 1877 appears to have been formally tendered and formally accepted, the Commissioners are unable to see any grounds on which it could be held that a fresh certificate was not required on his re-appointment.

I have, &c.

The Secretary, General Post Office, to the Secretary, Civil Service Commission.

SIR, 26th August 1878.

I BEG leave to forward to you the enclosed copy of a letter which has been received from the Lords Commissioners of Her Majesty's Treasury, and I have to request that, in accordance with the authority contained therein, you will be so good as to move the Civil Service Commissioners to take the necessary steps for granting Mr. X —— Y ——, a telegraphist in the Post Office, London, a certificate of qualification under Clause VII. of the Order in Council of the 4th June 1870.

I have, &c.

ENCLOSURE.

MY LORD, Treasury Chambers, 23rd August 1878.

WITH reference to your Lordship's letter of the 15th instant, on the subject of the reinstatement of Mr. X —— Y —— in the service of the Post Office, I am directed by the Lords Commissioners of Her Majesty's Treasury to state that, if my Lords are meant to understand from Mr. Tilley's letter of the 28th June 1878 that Mr. X —— Y ——'s resignation was due exclusively to a mistake on his own part, they assent to the application of Clause VII. of the Order in Council of the 4th June 1870 to remedy this mistake.

They entirely agree with the Civil Service Commissioners in thinking that a fresh certificate is necessary, and they are further of opinion that full and independent inquiry should be made by them as to the nature of the malady which caused him to retire, and as to his present state and prospects of health.

The case is one which my Lords look upon as somewhat extraordinary, and they will not be disposed to repeat the concession now made.

Members of the public establishments must abide the consequences of acting without first taking the pains to ascertain what are the rules of the offices in which they are employed.

I am, &c.

The Postmaster-General. (Signed) R. R. W. LINGEN.

FOREIGN OFFICE.

FOREIGN OFFICE.

The Under Secretary of State, Foreign Office, to the Secretary, Civil Service Commission.

Information requested by the Italian Ambassador as to appointment, pay, promotion, &c., in the Civil Service.

SIR, 22nd June 1878.

I AM directed by the Secretary of State to transmit to you, to be laid before the Civil Service Commissioners, the accompanying copy of a letter from the Italian Ambassador at this Court, inclosing a memorandum of questions bearing upon the subject of admissions to the Civil Service in this country, and other matters relating to the position and prospects of civil servants of the Crown; the question of dismissal and superannuation, the classification of Civil Service appointments, &c.

I am to request that you will explain to the Commissioners that the Italian Ambassador is very desirous of receiving specific and detailed replies to the various questions put, so far as they can be given, irrespective of the information on such points which may be contained in the various Orders in Council and Acts relating to pensions, &c., which I am to request may also be furnished with your reply to this letter.

I am, &c.

ENCLOSURE.

35, Queen's Gate, 15 June 1878.

L'Ambassadeur d'Italie présente ses compliments à Sir J. Pauncefote et se référant à la conversation qu'il a eu l'honneur d'avoir avec Sir Julian Jeudi dernier s'empresse de lui transmettre ci-joint le document contenant les questions relatives à la condition des employés en Angleterre.

Questions.

1. Whether there is any law for admissions and appointment to the Civil Service advancement, dismissal, discipline, and judicial status of the civil officers?

If such law does not exist, what are the rules and regulations?

2. Whether the Civil Service Officers are divided into classes with reference to their functions as in Italy (viz., Civil Service Officers, accountants, and amanuenses), or in graduated classes as in France and Austria?

3. Whether the admission to the Civil Service is by examination and competition or by provisional admission through examination, and whether some allowance and definitive admissions are granted after a certain period of trial and a second examination?

4. Whether the Civil Officers have a right to a proportionate increase of salary after a certain time without having attained a promotion? In that case whether such an increase is considered as a compensation for particular cases, or whether it extends to all classes of officers?

5. If superannuations are paid as in Italy, by the Treasury, who receives every year a certain sum of money for that purpose, retained from the salaries, or whether they are paid by private companies. If such is the case, what are the statutes of those companies.

6. Whether any reforms on such matters have been introduced in the last 10 years, and in that case which are the most important ones.

Memorandum in reply by the Civil Service Commissioners.

The following Memorandum was transmitted to the Secretary of State for Foreign Affairs on the 22nd of July 1878:—

ANSWERS to the QUESTIONS put by the ITALIAN AMBASSADOR, and enclosed to the CIVIL SERVICE COMMISSIONERS in LETTER from the FOREIGN OFFICE of June 22nd, 1878.

The following statements refer exclusively to the *clerical* portion of the Civil Service and to the Staff Officers by whom it is administered. It is presumed that the questions put by the Italian Ambassador relate to this portion and not to the large number of inferior officers performing, for the most part, out-door functions,

FOREIGN OFFICE.

Memorandum as to appointment, pay, promotion, &c., in the Civil Service.

such as excisemen, letter carriers, Customs officers, workmen, messengers, &c., nor to officers holding special individual positions in the clerical ranks, such as inspectors, schoolmasters, surveyors, draughtsmen, curators, &c.

1. (*a.*) *Admissions and Appointments.*—The rules for "admissions and appointments" to the Civil Service are fixed by Orders in Council of 4th June 1870 and 12 February 1876, the latter referring to one grade only of the service.

1. (*b.*) *Advancement.*—There is no general rule throughout the service as to promotions. Within the several departments the selection of the person to be promoted rests with the head of each Department, by whom, no doubt, considerable weight is usually given to seniority, though this alone does not give a claim to advancement.

Selections for advancement from one department to another are, for the most part, made by the Lords of the Treasury. The Civil Service Enquiry Commission in 1875 recommended that promotion should be exclusively by merit without reference to seniority. The part of their plan with which this recommendation was connected has, however, not yet been adopted by the Government.

A copy of this report is herewith forwarded.

1. (*c.*) *Dismissal.*—The Judges and some other of the highest officials hold office "*quam diu se bene gesserint.*" They can only be removed by the Crown on an address from both Houses of Parliament.

But the great majority of civil servants hold office "*durante bene placito.*" A person in this position can be dismissed at any time at the discretion of the head of his Department, but a member of the permanent Civil Service is rarely dismissed except for grave misconduct.

1. (*d.*) *Discipline.*—Discipline is exercised by the heads of the several Departments. There are no rules binding on the whole service. The Lords of the Treasury, however, occasionally issue Minutes respecting discipline in their own Department and in some others subordinate to them; and these Minutes, being circulated through the service, tend to produce uniformity on all important points.

1. (*e.*) *Juridical Status.*—Civil servants are in all respects in the same position before the law as ordinary citizens, having now neither privileges nor disabilities, except that officers of the Revenue Departments are exempt from service on juries.

2. *Division into Classes.*—Prior to the year 1876 the English Civil Service was constituted entirely on a departmental basis, each office having its own staff of clerks selected exclusively with reference to its own requirements, and intended to serve in it alone. There was no body of clerks appointed to the service generally, though there has always been, outside of the service, an indefinite number of persons who might be employed, *for mere copying*, in any Department on occasions of pressure. Until 1870 these persons were hired by the Departments from tradesmen; but since 1870 they have been supplied by the Civil Service Commissioners, who keep a register of the names of men and boys competent and willing to be employed in this temporary capacity.

Since 1876, however, a large part of the permanent Civil Service has been reorganized in pursuance of the recommendations of a Treasury Commission (*see* copy of their report herewith). This Commission suggested that the clerical portion of the permanent service should be divided into—

Clerks (Upper Division),
Clerks (Lower Division),
Boy Clerks (Lower Division),

and that the selection of these clerks should be made (in anticipation of vacancies), not for the Departments severally, but for the service generally; appointments being made from a list in order of merit as vacancies might occur in one Department or another.

A further suggestion was that there should be a uniform scale of salary for each division; and that the clerks should be transferable from one Department to another within the same division.

At present the proposed organization has not extended beyond the constitution of a Lower Division (which comprises, however, the great bulk of the clerical establishments) by an Order in Council, dated 12th February 1876 (copy annexed).

The scheme suggested for the Upper Division has not yet been adopted by the Government, but nearly every Department contains some superior clerks, usually selected by open competition under the Scheme (I.).

The permanent Civil Service may, therefore, be said to consist of:—

1. *Staff Officers.*—Secretaries and other superior officers below political officers. These places are generally filled by promotion or transfer, and not by open competition.

FOREIGN OFFICE.

Memorandum as to appointment, pay, promotion, &c., in the Civil Service.

2. *Clerks.*—Corresponding more or less nearly with the upper grade recommended by the Civil Service Enquiry Commission. These officers receive in the different Departments various rates of pay, and perform duties of different degrees of difficulty and importance. In all Departments, however, they are entrusted with the more responsible duties, whether of accounts or of general business; and in all they are eligible for promotion to the staff offices, though they have no claim to such promotion.

3. *Lower Division Men Clerks.*
Lower Division Boy Clerks.

To these officers are entrusted the more routine and mechanical duties, whether of accounts or of general business. They have no claim to promotion to the higher grade; and it is not intended that they should be promoted to it.

Below these officers are, in most Departments, the temporary copyists above referred to.

A considerable number of offices (in most cases, however, of small size) have taken no steps to organize themselves on this plan. In these offices the clerks may be said to be in graduated classes; the inferior duties being performed by the lowest rank, and each officer being eligible to promotion from class to class to the upper ranks.

3. *Admission* to the Civil Service is, in the majority of cases, by open competition. In the remainder it is by examination (in competition with others or alone) on the nomination of the official charged with the patronage.

In all cases appointment is subject to probation (sometimes of six months, and in some cases of a year), and an officer is not finally appointed unless this period of probationary service has been satisfactorily passed. But no second examination is required, and the full pay of the rank is received by the officer during the probationary period.

4. In almost all cases the civil officer obtains a periodical increase of salary without having attained a "promotion." In the "Lower Division" the increments are continued until the clerk attains the maximum salary (200*l.*) of the division, when they finally stop. In Departments divided into classes of clerks within the same Division, the increments are suspended when a clerk has reached the maximum salary of the class, and resumed when he is promoted to the class above.

5. Superannuation is now paid by the Government, no deduction on account of it being made (as was formerly the case) from the salaries. The Act of Parliament on Superannuation is sent herewith; together with the report of the Commission whose recommendations it carried into effect.

6. The most important reforms of the last 10 years are, the introduction of open competition as a means of selecting candidates for admission (*see* Order in Council, 4th June 1870), and the classification of the service suggested by the Civil Service Enquiry Commission, which has already in part been carried into effect by the Government (*see* Order in Council of 12th February 1876).

Papers sent herewith.

Report of Superannuation Commission, Civil Service Superannuation Act (22 Vict. cap. 26), Reports (1st, 2nd, and 3rd) of Civil Service Enquiry Commission, 21st Report of the Civil Service Commissioners, Diplomatic Service Regulations.

The Under Secretary of State, Foreign Office, to the Secretary, Civil Service Commission.

SIR, 28th August 1878.

WITH reference to your letter of the 22nd ultimo, inclosing a paper for communication, unofficially in the first instance, to the Italian Ambassador at this Court, containing information on various points connected with Civil Service appointments, I am directed by the Marquis of Salisbury to transmit to you, to be laid before the Civil Service Commissioners, the accompanying copy of a letter from General Menabrea, expressing his acknowledgments for the information thus furnished to him.

I am, &c.

FOREIGN OFFICE.

As to appointment, pay, promotion, &c., in the Civil Service.

ENCLOSURE.

M. LE MARQUIS, Italian Embassy, le 5 Août 1878.

J'AI l'honneur d'accuser réception à Votre Excellence de sa lettre, en date du 27 du mois dernier, par laquelle elle a bien voulu me transmettre un rapport de MM. les Commissaires du Civil Service, en réponse à quelques questions que j'avais eu l'honneur de communiquer au Foreign Office relativement aux règlements en vigueur en Angleterre sur les employés civils.

Je prie Votre Excellence de vouloir bien se faire l'interprète de mes sentiments de gratitude auprès de MM. les Commissaires susdits pour les importants renseignements qu'ils viennent de me faire parvenir, et d'agréer elle-même mes remerciements empressés pour l'appui bienveillant que le Foreign Office a bien voulu me prêter en cette occasion.

Veuillez agréer, &c.
(Signé) MENABREA.

Son Excellence le Marquis de Salisbury,
&c. &c. &c.

HOME OFFICE.

HOME OFFICE.

Naturalisation.

The Under Secretary of State, Home Office, to the Secretary, Civil Service Commission.

SIR, 24th September 1878.

I AM directed by the Secretary of State to transmit to you herewith a letter and enclosure from Mr. ——, who was granted a certificate of naturalisation, under the Naturalisation Act, 1870, on the 12th instant, inquiring as to his rights in the matter of competing at examinations for appointments in the Civil Service. And I am to request that you will lay the same before the Civil Service Commissioners, and move them, in returning the same, to favour the Secretary of State with their observations thereon.

I am, &c.

ENCLOSURE.

SIR, 21st September 1878.

A CERTIFICATE of naturalisation having been kindly granted to me and duly registered at your office on the 12th instant, I should consider it a great favour if you will kindly confirm my opinion that I can claim all the rights and privileges of a natural born subject of Her Majesty as regards an appointment in the Civil Service. I enclose for your guidance part of the general regulations for competitive examinations for Civil Service appointments, and have underlined that section which refers to my question.*

* * * * * *

The Under Secretary of State for the Home Department,
Whitehall.

The Secretary, Civil Service Commission, to the Under Secretary of State, Home Office.

SIR, 8th October 1878.

IN reply to your letter of the 24th ultimo, forwarding, for observations of this Board thereon, a letter from Mr. ——, a naturalised alien, inquiring as to his rights in the matter of competing at examinations for appointments in the Civil Service,

I am directed by the Civil Service Commissioners to acquaint you, for the information of the Secretary of State, that the question of Mr. ——'s eligibility to compete at such examinations is now under their consideration, Mr. —— having, since the issue to him of a certificate

* *See* paragraph 3 of General Regulations (p. 129).

HOME OFFICE.

Naturalisation.

of naturalisation under the Act of 1870, become a candidate at an examination for Lower Division clerkships under regulations which, *inter alia*, prescribe that "these examinations will be open, with such "exceptions and under such conditions as may be laid down, to all "natural born subjects of Her Majesty, being of good health and "character."

Having referred to the above-mentioned Act, and also to Mr. ——'s certificate of naturalisation, the Civil Service Commissioners are themselves disposed to think he was entitled to be admitted to the examination in question, and that, if eligible in other respects, he could claim the right to be admitted to any of the examinations to which the quoted regulation applies.

As they observe, however, that his certificate of naturalisation has been granted with a qualification in the event of his proceeding to the Foreign State of which he was previously a subject, the Civil Service Commissioners would be glad to be informed whether Mr. Cross concurs with them in the opinion that Mr. —— may nevertheless be considered to be a natural born subject within the meaning of the said regulation.

I have, &c.

The Under Secretary of State, Home Office, to the Secretary, Civil Service Commission.

SIR, 10th October 1878.

I AM directed by the Secretary to acknowledge the receipt of your letter of the 8th instant, containing the views of the Civil Service Commissioners on the question of the rights of Mr. ——, a naturalised alien, in the matter of competing at examinations for appointments in the Civil Service; and I am to acquaint you, for the information of the Commissioners, that the Secretary of State concurs with them in opinion that, notwithstanding the qualification in the certificate of naturalisation relating to the event of the holder thereof proceeding to the Foreign State of which he was previously a subject, Mr. —— may be considered a "natural born subject" within the meaning of the regulation quoted in your letter as to the qualifications of candidates for examination for posts in the Civil Service.

I am, &c.

POST OFFICE.

POST OFFICE.

Employment (occasional) of Royal Engineers in the Telegraph Service.

The Secretary, General Post Office, to the Secretary, Civil Service Commission.

SIR, 5th March 1878.

I HAVE to inform you that a certain number of officers and men of the Royal Engineers are employed in this Department as superintendents, inspectors, and clerks in provincial postal telegraph offices, and I beg leave to inquire whether the Civil Service Commissioners consider that such persons should be required to obtain certificates of qualification.

These officers and men do not receive official salaries from the Post Office, but are paid working allowances on scales agreed upon between the War Office and the Post Office, and sanctioned by the Treasury. They are also subject to removal at any time by the War Office.

I have, &c.

POST OFFICE.

Employment (occasional) of Royal Engineers in the Telegraph Service.

The Secretary, Civil Service Commission, to the Secretary, General Post Office.

SIR, 9th March 1878.

IN reply to your letter of the 5th instant, I am directed by the Civil Service Commissioners to state that, in the opinion of this Board, persons in the position described do not come within the scope of the Order in Council of 4th June 1870.

I am, &c.

SCIENCE AND ART DEPARTMENT.

SCIENCE AND ART DEPARTMENT.

Employment of Royal Engineers in the permanent Civil Service.

The Comptroller and Auditor General to the Secretary, Civil Service Commission.

SIR, 11th March 1878.

I AM directed by the Comptroller and Auditor General to transmit to you herewith the copy of a query addressed to the accounting officer of the Science and Art Department relative to the employment without Civil Service certificate of an officer on the reserved list of the officers of the Royal Engineers, and I am to request that the Civil Service Commissioners will inform the Comptroller and Auditor General for his guidance whether they support the view of the Science and Art Department that Civil Service certificates are unnecessary in cases like the present.

Captain A.B., whose name appears in the Army List as a Captain in the Royal Engineers (Temporary Reserved List), was, previous to his appointment of Inspector of Local Schools of Science and Art, an assistant instructor in telegraphy at the School of Military Engineering. In the various lists of posts gazetted into Schedule B. of the Order in Council, the Comptroller and Auditor General has found no mention of the inspectors of local schools.

I am further to remark that Captain A.B. now forms a part of the regular establishment of the Science and Art Department.

I have, &c.

Description of the Voucher.	Query or Observation.	No. of the Query.	Answer or Explanation of the Accountant.
B. 9. Inspection and examination. May, Vou. 1,176, A —— B ——, 32*l.*, as inspector.	It is requested that a reference may be given to the date of Captain A.B.'s certificate of qualification from the Civil Service Commissioners.	23	It is believed that such certificate is unnecessary under the Royal Warrant of 15th January 1872, with reference to the employment of Royal Engineer officers in the Civil Service of the Crown. (Signed) THOMAS T. BOWLER, Clerk in charge of Accounts, 26th February 1878. (Signed) NORMAN MCLEOD, Accounting Officer, 26th February 1878.

SCIENCE AND ART DEPARTMENT.

The Secretary, Civil Service Commission, to the Comptroller and Auditor General.

SIR, 23rd March 1878.

Employment of Royal Engineers in the permanent Civil Service.

HAVING laid before the Civil Service Commissioners Mr. Treherne's letter of the 11th instant, with its enclosures, on the subject of the appointment without certificate of qualification from this Board of Captain A.B. to the situation of Inspector of Local Schools of Science and Art,

I am directed to acquaint you that in the opinion of the Civil Service Commissioners, as Captain A.B. now forms a part of the regular establishment of the Department of Science and Art, and as his emoluments are now, it is inferred, entirely derived from that Department, the provisions of the Order in Council of 4th June 1870 are applicable to his appointment.

I have, &c.

*** For further information on this subject, *see* "Appropriation Accounts" for 1877-8, page 255.

The Secretary, Civil Service Commission, to the Secretary, Treasury.

SIR, 25th June 1878.

Objection to high limit of age, waiver of claim to superannuation notwithstanding.

I AM directed by the Civil Service Commissioners to transmit, for the information of the Lords Commissioners of Her Majesty's Treasury, the enclosed copy of correspondence which has passed between this Department and the Science and Art Department on the subject of the situation of housekeeper and superintendent at the Dublin Museum of Science and Art.

The Commissioners do not understand that their Lordships have assented to the rules which appear from the latest of the enclosed letters to have been proposed to them. On the contrary, the Commissioners believe that their Lordships would concur with them in objecting to a maximum limit of age so high as 60, even if the condition suggested were held to be compatible with the provisions of the Superannuation Act of 1859. Indeed, the existence of that condition, so far from obviating the special objection which has always been entertained to high maximum limits, would rather intensify it, since the inclination of heads of Departments, from motives of benevolence, to retain an old officer on full salary when no longer efficient, would be rather strengthened than weakened by the fact that, if dismissed, he would have no superannuation allowance to fall back upon.

* * * * *

I have, &c.

EXTRACT FROM ENCLOSURE.

Science and Art Department, South Kensington,
SIR, 8th June 1878.

* * * * * *

The limits of age which my Lords proposed to the Treasury on the 2nd October 1877 for the situation of housekeeper in the Science and Art Department and its affiliated institutions were from 30 to 60, with the proviso that if a candidate should be appointed over the age of 50, no claim for a pension on retirement would be created thereby.

* * * * * *

I am, &c.
(Signed) NORMAN MCLEOD.

The Secretary,
Civil Service Commission.

*** It was ultimately decided that a certificate should be granted under Clause VII. of the Order in Council of 4 June 1870 for the candidate whose case gave rise to this correspondence.

MILITARY ENTRANCE EXAMINATIONS.

Military Entrance Examinations.

Physical Competition.

MILITARY ENTRANCE EXAMINATIONS.

The Director-General of Military Education to the Right Hon. Lord Hampton, G.C.B.

Military Education Division, War Office,
28th November 1877.

My Lord,

With reference to your letter of the 19th May last to the Secretary of State for War, forwarding a memorandum on the subject of adding a physical competition to the present examination for first commissions in the army, I am desired to acquaint you that your memorandum having been maturely considered by the Secretary of State and by His Royal Highness the Field Marshal Commanding-in-Chief, it appears that the chief difficulty in adopting your proposal is as to the mode of testing physical qualities, and I am to state that, before a final decision is arrived at, Mr. Hardy considers that "a conference with "the Civil Service Commissioners or some one on their behalf would "be desirable."

I have, &c.

The Secretary, Civil Service Commission, to the Director-General of Military Education.

20th December 1877.

Sir,

I am directed by the Civil Service Commissioners to acknowledge the receipt of your letter of the 28th ultimo, in which, with reference to a proposal that a physical competition should be added to the present examination for first Commissions in the Army, you state that before a final decision is arrived at on the subject, Mr. Hardy considers that a conference with the Civil Service Commissioners or some one on their behalf would be desirable.

In reply, I am to request that you will inform the Secretary of State for War, as well as His Royal Highness the Field Marshal Commanding-in-Chief, that, although the share assigned to the Commissioners by the Order in Council of 10th December 1875 in the conduct of military entrance examinations is confined to the literary part of such examinations, they would be very glad if any assistance or advice which they may be able to give should facilitate the carrying into effect of the proposal above referred to, which they are disposed to regard as perfectly feasible and likely to be highly beneficial to the service; and with this view they will have pleasure in taking part in a conference, as suggested in your letter, on any day that may be convenient in the course of next month.

In the meantime they desire me to forward, for the consideration of His Royal Highness and of Mr. Hardy, a letter, which was addressed to them some months ago on the subject by Mr. E. E. Bowen, master of the Modern School at Harrow, together with an extract from a further communication more recently received from the same gentleman.

I have, &c.

ENCLOSURE.

MILITARY ENTRANCE EXAMINATIONS.

Physical Competition.

MY LORD AND GENTLEMEN, Harrow, 30th March 1877.

1. I REQUEST leave to bring before your notice a suggestion with reference to the examination for the army and the Civil Service of India, which appears to me to have some importance, and to be of a practical character. What I propose is that there should be added to the present examination a physical competition in which the marks gained should be added to those otherwise obtained by the candidates.

2. I should perhaps say that I have had considerable experience of the working of the present examinations, being the master in principal charge of the Modern Side at Harrow School, and that from circumstances into which I need not enter, I have a somewhat varied acquaintance, not only with the practice of physical exercises generally, but also with the capacity of boys and young men to take part in them.

3. I cannot but think that an addition of marks for physical excellence would be in itself useful and desirable; that it is merely just that bodily gifts of strength and health should tell in the selection of an officer or an Indian administrator in some proportion to, though no doubt in a less degree than, those results of intelligence and study which are denoted by intellectual success, and that the addition would go far towards increasing the general popularity of the system of competitive examination. If carried out with moderation, it could not impair the success of any of the candidates most remarkable for intellectual merit, but only alter the place of the lower candidates, who, as a general rule, approach very nearly to one another in marks, but who might reasonably be discriminated from one another by a verdict on their physical accomplishment.

4. Permit me, however, to refer to one or two of the dangers which it would seem most important to avoid in the introduction of such a change as I have suggested. In the first place it would be desirable to avoid any specially professional element in the qualifications demanded. This would be merely following the example of the examination as conducted hitherto. Just as a lad is not asked now to show himself skilled in fortification, military engineering, or the Indian languages, but only to give evidence of his being so qualified as to be able to approach these studies with the probability of greater success than his rivals, so I would have him show proficiency, not in riding, shooting, or the endurance of camp life, but in those physical excellences which are natural and customary among all boys and youths, and which give promise of future healthy development.

5. Again, it would be right to exclude mere skill as an element of success, since accident and circumstances have so large a share in its production, and to avoid exercises which would give a marked advantage to candidates possessed of wealth and leisure and accustomed to a country life over those in humbler circumstances, and to render the competition at once simple and really open to all.

6. Once more, the success of the scheme might be impaired by its involving a great expenditure of time. I venture to submit that in the detailed suggestions which I am about to make this danger will be minimised if not avoided.

7. If, however, it should be urged that all that is necessary is provided at present by the medical examination of the candidate, I would respectfully reply, in the first place, that this tends to secure only a minimum of health and strength, without giving any advantage to the healthiest and strongest; and secondly, that in this, as in all examinations, a mere standard tends inevitably to lower itself, and that at present the qualifications demanded are in some cases very low. Indeed, I question whether the successful candidates for some of the examinations of which I am speaking are in point of physical qualifications any further in advance of the average of boys and young men than would naturally follow from the fact that a military or an Indian career suggests itself most naturally to the vigorous rather than to the weak, and, as far as my experience goes, this difference shows itself but slightly.

8. I would propose, then, that—

(*a.*) Candidates should be allowed to offer themselves for a voluntary physical examination.

(Voluntary, because the essence of the examination would be to give additional advantage to those who excel in physical merit, not to graduate all the candidates who are of an average or below the average standard.)

(*b.*) The marks gained should be added to those otherwise obtained.

(In other words this competition should not exclude any other subject; it would hold a position like that which freehand drawing now has in most of the examinations.)

(*c.*) The object should be to give an advantage to the strongest, most active, most healthy candidates, not to those specially accomplished in exercises suited to the army or to Indian life.

MILITARY ENTRANCE EXAMINATIONS.

Physical Competition.

(*d.*) The number of marks allotted should be such as to leave to intellectual merit a very clear predominance.

(*e.*) The details of the marking should not be published.

(This would be necessary to prevent the vulgarising of the competition, and to avoid personal rivalry.)

(*f.*) Marks should be given up to the maximum assigned, on the understanding that mediocrity is represented by 0.

(This is in order to preclude the entrance to the competition of any but those superior in physical merit. The saving of time would be an important result of this, and the principle is, I venture to think, the right one to adopt.)

(*g.*) Only those should be examined who have passed the preliminary examination.

(Also for the saving of time.)

(*h.*) The maximum should be practically obtainable by the most strong, healthy, and active youths, and its marks should be placed at about the same number as those allotted to freehand drawing (1,000 in the army examination).

(*i.*) The examiners should be directed to take into consideration the height, appearance, carriage, muscular development, visible health, measure of chest, &c. of the candidates, and any other evidences of strength and activity which may be easily recognised.

9. Such, my Lord and gentlemen, are the conditions which I would submit for the examination which I propose, and it would be perhaps well to be content with these at the outset. But I cannot deny that the competition would be more satisfactory, and the strain on the discretion of the examiners less, if they were empowered, as they found themselves able, to introduce some specific exercises into their examination, which might be held in the neighbourhood of a gymnasium and a swimming bath. There can be no doubt that a really more perfect result would be obtained if some such development as the following were added to the examination: it will be remarked that it is drawn in strict adherence to the principles suggested above in s. 4.

10. The 1,000 marks awarded to physical merit should be divided into two moieties, 500 being given at the general discretion of the examiners, as above recommended, and 500 in the following proportion:—

i. 200 marks for speed. A time race of 300 yards; mediocrity, *i.e.*, 0 marks, being represented by a time of 36 seconds.

ii. 100 marks for swimming 100 yards; 50 marks being given for ordinary, and 100 for good swimming.

iii. 100 marks for high jumping; mediocrity represented by 4 ft. 6 in.

iv. 100 marks for carrying shot.

It is obvious that the schedule just suggested would need revision after some experience had been gained of its working; but I am much mistaken if it would not be found to afford a fairly satisfactory basis for the first occasion of a valuation of candidates.

I have only, my Lord and gentlemen, to apologise for having taken up so much space in the suggestions which I have ventured to lay before you, and to recommend them to your favourable consideration.

I have, &c.
(Signed) E. E. BOWEN,
Late Fellow of Trinity College, Cambridge,
and Master of the Modern Side, Harrow School.

The Chairman and Members
of the Civil Service Commission.

EXTRACT from a LETTER from Mr. E. E. BOWEN.

Harrow, 7th December 1877.

* * * * * *

The more I have thought of it the more I am impressed with the importance of simplicity at *the outset*. On the one hand, persons who are responsible for adopting the plan may so easily shrink from anything that seems complicated, while if one assesses simply the appearance of health, strength, and activity, it is what everyone must allow to be easy and practicable; and on the other, it seems to me *most* important to keep the reform popular by excluding from it what in our conversation I spoke of as aristocratic accomplishments.

I am quite certain that at this moment I could most easily allot marks for physical excellence to the boys who compose my form at Harrow, and I could probably do it

still better if I had a doctor at my side; and in candidateship for the Army it seems mere justice that this kind of excellence as well as the other should have weight.

If at any time any evidence or advice on points of detail which I could give were thought likely to be useful, I should have, of course, much pleasure in giving it.

(Signed) E. E. BOWEN.

Physical Competition.

The Director-General of Military Education to the Secretary, Civil Service Commission.

SIR, 1st February 1878.

IN acknowledging the receipt of your letter of the 20th December last, and its enclosure, with reference to the proposal to add physical competition to the present examination for the Army, I have it in command to state that His Royal Highness the Field Marshal Commanding-in-Chief has nominated the officers named in the margin to confer with the Civil Service Commissioners on the subject; and I am to request you will be good enough to inform me what day next week, other than Tuesday or Saturday, would be convenient to the Commissioners for the conference to take place at their office, and if 2 p.m. would be a suitable hour.

The Director-General of Military Education (Lieut.-General C. P. B. Walker, C.B.)
The Assistant Military Secretary (Major-General R. B. Hawley, C.B.).
The Assistant Adjutant-General (Colonel G. R. Greaves, C.B.).

I have, &c.

The Secretary, Civil Service Commission, to the Director-General of Military Education.

SIR, 4th February 1878.

I AM directed by the Civil Service Commissioners to acknowledge the receipt of Colonel Barker's letter of the 1st instant, and to state in reply, for the information of His Royal Highness the Field Marshal Commanding-in-Chief, that the Commissioners will have much pleasure in receiving the officers therein mentioned on Thursday at 2 p.m., to confer on the subject of the addition of physical competition to the present examination for the Army.

I am, &c.

The Joint Committee of the War Office and the Civil Service Commissioners to the Secretary of State for War.

SIR, 26th April 1878.

1. IN compliance with the wish expressed to us by the Secretary of State, and His Royal Highness the Field Marshal Commanding-in-Chief, we have conferred on the subject of the proposal to add a physical competition to the examinations for admission to the army, and we have now the honour to submit for your consideration, and that of His Royal Highness, the results of our deliberations.

2. On the general question of the desirableness of the proposed addition we apprehend that there can be little difference of opinion. Whether regard be had to the direct utility of physical vigour in the discharge of military duties, or to its importance as connected with valuable mental and moral qualities, we entertain no doubt that some account should be taken of it in such examinations, provided that the value set upon it be not such as to depreciate superior intellectual ability,

MILITARY ENTRANCE EXAMINATIONS.

Physical Competition.

that proper tests can be agreed upon, and that satisfactory means can be found of applying those tests.

3. With the view of obtaining the best advice on these points, we addressed a confidential circular to the heads of three great military establishments, and of eighteen of the principal public schools, inviting an expression of their opinions both on the general scope of the proposal, and on the details of a plan for carrying it into effect. The replies received to that circular appear to us of so much importance that they ought to be brought under your notice; and we have accordingly, with the consent of the writers, appended copies of them to this report, together with copies of a letter from Mr. E. E. Bowen, master of the Modern Side at Harrow School, dated 30th March 1877, and of a more recent communication from the same gentleman.

4. We have also derived much benefit from personal interviews with several gentlemen specially conversant with the different subjects of our inquiry, namely, Surgeon-General W. Munro, M.D., C.B., of the Army Medical Department; Mr. E. E. Bowen, already mentioned; Colonel F. Hammersley, formerly Inspector of Gymnasia, and Major G. F. Gildea, who now holds that appointment; and Major E. Ward Ashton, R.H.A., Superintendent of the Riding Establishment at Woolwich.

5. Assuming it to be desired that marks should be given for physical qualifications, we had to consider to what qualities those marks should be attached; and first of all, whether they should be awarded partly for constitutional health and vigour, as estimated after personal inspection by a Board of Medical Examiners, or only for activity and adroitness as displayed in the performance of specific exercises.

6. We had great difficulty at arriving at a satisfactory conclusion on this point. On the one hand, it did not seem to be right that no credit at all should be given for superiority in general bodily health and vigour, but that everything should be made to depend on the possession of personal strength and activity, and the practice of particular accomplishments. It was even represented to us that if exclusive regard were paid to such accomplishments, the effect would be not only to injure the health of the candidates by taxing simultaneously their bodily and mental energies, but also to affect prejudicially a large number of schools, by leading to the substitution of separate gymnastic training for social games. On the other hand, it was felt that in any general estimate of a candidate's health and strength, formed even by experienced medical officers, there must be room for considerable differences of opinion, affecting the competition with an element of uncertainty which it is important as far as possible to exclude. On this ground we hesitate to recommend that marks should be given for physical vigour, except as exhibited in the exercises which we now proceed to mention.

7. In selecting these it was obviously necessary to set aside, as unsuitable for the particular purpose in hand, all those of which the essence consists in personal contest; those in which there would be danger of injury from overstraining; and, for the present at least, those in which the competition would occupy much time, or otherwise would present any considerable practical difficulties. Subject to these conditions, it seemed desirable to admit any exercises ordinarily practised which tend to the development of bodily strength and activity.

8. Guided by these considerations, we recommend that competitions should be held under the following six heads: (1) riding; (2) walking; (3) running; (4) leaping; (5) swimming; and (6) gymnastics.

9. We think that the examination in these exercises should be entirely voluntary; and considering that some of them, *e.g.*, riding, swimming,

MILITARY ENTRANCE EXAMINATIONS.

and gymnastics, cannot be practised with success except under conditions which may not be within the reach of all competitors, we propose that no candidate should be allowed to enter as a competitor under more than three heads, and that the total number of marks allotted to the physical competition should be obtainable by adequate proficiency in any three.

Physical Competition.

10. We propose further that while no credit at all should be given for merit that does not rise above a certain minimum, the degree of proficiency to be required under the several heads, in order to gain full marks, should not be higher than may be attained by active and vigorous young men, without an undue amount of preparation.

11. We are sensible that even under these restrictions the valuation of physical qualities in the form of numerical marks must be attended, at first at least, with considerable difficulty, more especially as regards those exercises in which proficiency does not admit of mechanical measurement by time or distance; but the results of our inquiries have satisfied us that this difficulty may be met by a well-arranged plan of examination. We have not thought it our duty to draw out the details of such a plan, which would remain to be settled by the authorities to whom the conduct of the proposed examination might be entrusted, and which it might perhaps be found expedient to revise from time to time; but we desire to commend as worthy of careful consideration the suggestions contained in the following Memorandum, drawn up at our request conjointly by Colonel Hammersley and Mr. Bowen.

MEMORANDUM ON THE METHOD OF CONDUCTING A COMPETITIVE EXAMINATION IN PHYSICAL EXERCISES.

If it be decided to hold, as part of the army entrance examination, competitions in riding, walking, running, leaping, swimming, and gymnastics, we recommend that they should be conducted according to the following regulations. We have suggested in each case a *minimum*, *i.e.* the lowest degree of proficiency for which any marks should be given, and a *maximum*, *i.e.* the degree of proficiency entitling to the maximum number of marks.

RIDING (400 marks):

Minimum. A fairly good seat, and fairly good management of horse.

Maximum. A good, secure, and graceful seat, with thoroughly good management, including leaping.

Conditions.—In a riding school, with saddle, &c. of the ordinary kind, in ordinary morning dress.

WALKING:

One mile in 10 minutes	100 marks.	One mile in 9 minutes	300 marks.
„ 9½ „	200 „	„ 8½ „	400 „

Conditions.—On a prepared course; trowsers, and either shirt or jersey, to be worn, and any kind of shoes. Style not to be regarded with a view to marks; but unfair walking will, after two cautions, necessarily disqualify.

RUNNING:

	m. s.		m. s.
One mile in	5 30 - 100 marks.	One mile in	5 10 - 300 marks.
„	5 20 - 200 „	„	5 0 - 400 „

[I should greatly prefer a shorter course, as follows:—

	s.		s.
400 yards in	56 - 100 marks.	400 yards in	52 - 300 marks.
„	54 - 200 „	„	50 - 400 „

E. E. BOWEN.]

Conditions.—On prepared course; same dress.

LEAPING:

	ft. in.		ft. in.
(*a.*) Height,	4 6 - 50 marks.	(*b.*) Breadth,	15 0 - 50 marks.
„	4 8 - 100 „	„	16 0 - 100 „
„	4 10 - 150 „	„	17 0 - 150 „
„	5 0 - 200 „	„	18 0 - 200 „

MILITARY ENTRANCE EXAMINATIONS.

Conditions.—On prepared ground; same dress. For the high jump two tries at each height to be allowed. For the broad jump the distance to be measured from the line, and four tries to be allowed. Marks to be given for the best performance, not for the average of attempts.

Physical Competition

SWIMMING.

For swimming 50 yards in good style - - -	200 marks.
For "headers" (three tries allowed) - - -	100 „
For diving a distance of 60 feet - - - -	100 „

Conditions.—In a swimming bath, warmed in winter. Drawers to be worn.

GYMNASTICS:

(*a.*) Bridge ladder - - - - - -	100 marks.
(*b.*) Elastic ladder - - - - - -	100 „
(*c.*) Climbing rope - - - - - -	100 „
(*d.*) Prepared wall - - - - - -	100 „

Conditions.—The same dress as for walking and running. The marks to be assigned at the discretion of the examiner, the minimum and maximum being determined so as to correspond as nearly as possible to the standard prescribed for the other competitions.

(Signed) F. HAMMERSLEY, Col. (Signed) E. E. BOWEN.

12. Whatever plan may be adopted, we are strongly of opinion that the examination in these exercises should be conducted in private; and we think that in any report which may be published of this part of the competition, the aggregate only of the marks obtained by each candidate, and not the details, should be stated.

13. It only remains to consider what relative values should, in the combined competition, be set upon intellectual and physical qualifications respectively; in other words, what number of marks should be placed at the disposal of the examiners in the proposed exercises.

14. We have already intimated our opinion that nothing should be done to interfere with the reward due to superior intellectual merit. But in competitions for entrance to the Royal Military College, as in most large competitions, it is commonly found that below the degree of superior merit, and on each side of the line which separates the successful from the unsuccessful, there occurs a long list of candidates showing a comparative level of mediocrity; and we consider that no undue weight will be given to physical excellence, if it be allowed practically to decide the question of success or failure among candidates of this class, while helping also to determine the position of the others.

15. Looking, therefore, to the fact that at these examinations, in which about 100 candidates are usually selected, the average difference between the 50th and the 150th is about 1,000 marks, we think that the desired result would be attained if the method of marking were so arranged as to give about 1,000 marks to the best candidate in the physical competition; and as it is not probable that any candidate would obtain the absolute maximum in all the three exercises for which he entered, we would propose that this absolute maximum should be fixed at 1,200, which would give 400 for each exercise.

16. As no marks would be given for merit not rising above a certain minimum, it would not be necessary to make in these cases the deduction which is prescribed by the regulations as regards the literary examination, "in order to secure a proper proficiency in all the subjects taken up by a candidate."

17. We recommend that the same maximum (1,200) should be adopted in competitions for admission to the Royal Military Academy at Woolwich. It will not bear the same proportion to the number of marks allotted to literary and scientific subjects, for that number is considerably greater in these competitions than in examinations for

MILITARY ENTRANCE EXAMINATIONS.

commissions in the Line; but such a difference seems to be called for by the fact that for commissions in the Scientific Corps, to which Woolwich forms the entrance, physical qualifications are of somewhat less importance, relatively to intellectual qualifications, than in the other branches of the Service.

Physical Competition.

(Signed) HAMPTON.
BEAUCHAMP WALKER, Lt.-Genl.
G. W. DASENT.
R. B. HAWLEY, M.-Genl.
T. WALROND.
G. R. GREAVES, Colonel.

ENCLOSURE 1.

CIRCULAR addressed to the GOVERNORS of the R.M. COLLEGE, SANDHURST, and the R.M. ACADEMY, WOOLWICH, the COMMANDANT of the STAFF COLLEGE, ALDERSHOT, and the HEAD MASTERS of eighteen of the Principal Public Schools.

(*Confidential.*)

Civil Service Commission, Westminster,
14th February 1878.

SIR,

IT having been suggested that at the competitions for admission to the Royal Military College (Sandhurst) and the Royal Military Academy (Woolwich) marks should be given for physical in addition to literary qualifications, a Committee, consisting of three staff-officers of the army, with the Civil Service Commissioners, has undertaken, at the request of the Secretary of State for War and His Royal Highness the Field Marshal Commanding-in Chief, to draw up a report on the subject.

The particular proposals which they have now under consideration are set forth in the Memorandum hereto appended.

Before arriving at any conclusion respecting them, the committee are desirous to ascertain the views of the head masters of the chief public schools, and other persons specially interested in the subject; and they would be glad to be favoured, at your earliest convenience, with any observations which you may be disposed to offer either on the plan generally or on any of the details set down in the Memorandum.

I have the honour to be,
Sir,
Your obedient Servant,
HAMPTON,
Chairman of the Committee.

ENCLOSURE in ENCLOSURE 1.

MEMORANDUM of PROPOSALS now under consideration relative to the giving of Marks for Physical Qualifications in Competitions for Admission to Sandhurst and Woolwich.

It is proposed—

(1.) That the competition in physical subjects (apart from the ordinary qualifying examination before an Army Medical Board) be voluntary.

(2.) That no marks be given for merit which is not above mediocrity.

(3.) That no marks be given for health and strength, except as exhibited in the performance of specified exercises.

(4.) That the competition be in the following exercises:—
Riding.
Walking.
Running.
Leaping.
Swimming (in the summer examination only).
Putting shot.

(5.) That no candidate be allowed to obtain marks under more than three of these heads.

(6.) That the maximum number of marks obtainable under each head be 400, subject to no deduction.

MILITARY ENTRANCE EXAMINATIONS.

Physical Competition.

NOTE.—It may be proper to state, as bearing maximum to be assigned to physical qualificatio force the aggregates of marks obtained on the a for Sandhurst have been as follows:—

1st candidate	-	-	-	
50th	„	-	-	-
100th	„	-	-	-
150th	„	-	-	-
200th	„	-	-	-

The average number of appointme

At the three last competitions for Woolwich, where the number of candidates examined is considerably smaller, and the obtainable maximum higher, the averages have been—

1st candidate	-	-	-	-	7,328
20th	„	-	-	-	5,037
40th	„	-	-	-	4,021
60th	„	-	-	-	3,342
80th	„	-	-	-	2,285

Number of appointments, forty.

ENCLOSURE 2.

REPLIES to the foregoing CIRCULAR.

1. From Royal Military College.
2. „ Royal Military Academy.
3. „ Staff College, Aldershot.
4. „ Repton.
5. „ Rugby.
6. „ Malvern.
7. „ Marlborough.
8. „ Westminster.
9. „ Winchester.
10. „ Charterhouse.
11. From Uppingham.
12. „ Merchant Taylors'.
13. „ Harrow.
14. „ Wellington College.
15. „ Sherborne.
16. „ Eton.
17. „ Haileybury.
18. „ St. Paul's.
19. „ Dulwich.
20. „ Cheltenham.
21. „ Clifton.

1.

From General W. C. E. NAPIER, Governor of the Royal Military College, Sandhurst.

16th February 1878.

IN reply to your letter of the 14th instant, I beg to state that I entirely concur in the principle of giving marks for physical as well as for literary qualifications at the competitions for admission to the military colleges; and I trust that the committee now considering the subject may be able to overcome any practical difficulties which may attend the introduction of the system.

With respect to details, I have considerable doubts about "riding," both as to the difficulty of examining any large number of candidates in that subject and as to its being quite a fair subject for competition; bearing in mind that riding can only be at the command of those whose fathers are rich enough to afford to keep horses.

The other physical qualifications are within the reach of everyone, and may therefore be considered as fair subjects of competition.

I have, &c.

2.

From Major-General Sir JOHN MILLER ADYE, K.C.B., Governor of the Royal Military Academy, Woolwich.

18th February 1878.

IN reply to your letter of 14th February 1878, asking me to express my views on a proposal to give marks for physical in addition to literary qualifications at the competitive examinations for admisnon to the Military College at Sandhurst and the Royal Military Academy, I have the honour to inform you that, although I appreciate the importance of physical activity in youths intended for the army, I do not recommend the present proposal for the following reasons.

The number of marks proposed to be given are considerable, and will therefore really influence the general competition, and as it is laid down that they cannot be

MILITARY ENTRANCE EXAMINATIONS.

Physical Competition.

gained for mere physical strength, but for athletic merit above mediocrity, it is evident that the tendency will be to induce lads at school to train for the competition, and to devote their time to physical exercises which are personally agreeable to them, rather than to literary subjects, which to many may be distasteful, but which are in reality far more important. I think there is a danger that if such inducements are held out, the youths in some cases would overtrain and injure themselves at a critical time of life; for instance, running to excess and putting shot would be very objectionable. This argument no doubt may be turned the other way, and it may be asserted that some young lads at school injure their mental powers by over study, but in my judgment such cases are very rare; it is a result far more often asserted than proved.

Again, if successful candidates enter the military colleges partly in virtue of marks for physical qualifications, but weak in the necessary literary attainments, it is probable that they will fail in the periodical examinations in the obligatory subjects, and will in consequence not succeed ultimately in obtaining a commission.

I should therefore deprecate holding out inducements to lads at school to throw aside their books, feeling certain that their own personal feelings will lead them to a sufficiency of out-of-door exercise and sports.

I may mention that all gentlemen cadets, as soon as they are admitted into the Royal Military Academy, go through a regular course of gymnastic training under properly qualified instructors, and this when prudently carried out develops their physical powers and is advantageous. Marks are also given at the periodical examinations for gymnastics and for drills and exercises, and swimming is so far encouraged that no cadet can obtain marks for gymnastics unless he is able to swim.

Riding also is taught to cadets during the last year of their residence at the Academy at Woolwich, for which they receive marks, and prizes are given both for gymnastics and riding.

It is, in my opinion, wiser to encourage physical qualities in this way, and when the young men are of an age to profit by it, rather than to hold out inducements to lads of immature years to neglect their studies. I would observe that the subjects laid down in the present regulations for entrance, as well as those to be taught during residence at the Academy, were carefully considered a few years ago by a Royal Commission, and they seem to me to work in a satisfactory manner, and I see no reason for altering them, especially as I find that the gentlemen cadets as a rule are distinguished for their personal activity, and for their skill in athletic exercises.

I have, &c.

3.

From Major-General Sir A. ALISON, Bart., K.C.B., Commandant of the Staff College, Aldershot.

21st February 1878.

1. IN reply to your letter of the 14th instant, I have the honour to state that, in my opinion, the proposal to give marks at the competitive examinations for admission to the Royal Military College and Royal Military Academy is a good one.

2. It seems to me very advisable that, in a profession where (especially in the junior ranks) physical fitness in addition to mental capacity is of great consequence, a certain weight should be given to these qualities.

3. Thus, in infantry, however talented a young officer may be, he will be of little use on actual service if, from want of physical strength, he is unable, after a hard march, to look after the comfort and well-being of his men in camp. In the field the most important duties of the officers may often be said to begin when those of the men cease.

4. The same remark applies with reference to riding in cavalry and on the staff.

5. Moreover, I think it would be of great advantage that the hope of obtaining marks for physical qualities should induce young men preparing for examination to combine a bodily training with a mental one, and not, as at present, entirely to neglect the former for the sake of the latter, to the detriment of their future health and consequent utility in the service.

6. No one can have a higher regard for literary qualifications than I have; but I think it is a mistake to attach, in examinations, no value whatever to physical ones in an essentially (physically speaking) hard-working profession like the army.

7. At the same time it will be necessary to keep the maximum number of marks which can be obtained for physical qualifications in marked subordination to those which can be gained by literary ones.

MILITARY ENTRANCE EXAMINATIONS.

Physical Competition.

8. To me it seems that walking and riding cises proposed, and to each of these I would come next: to it 300 or 350 might be given. leaping, I think, would be well met by 250 not propose to give any, as I look upon it as very likely to overstrain young lads.

4.

From the Rev. H. R. HUCKIN, D.D., Repton.

17th February 1878.

I HAVE to acknowledge, with many thanks, the receipt of a circular respecting examination in physical qualifications in the case of candidates for army appointments.

I apprehend that you will find an almost unanimous welcome accorded to such a proposal.

And I can only express a hope that the Commissioners will see a way to extend the proposed scheme to the Indian Civil Service, where physical attainments are almost if not quite as valuable as in the army.

I would suggest for your consideration whether a *pass* qualification should not be required in physical exercise from every candidate. An officer who cannot run or swim, or leap or ride, appears to me very unlikely to prove efficient,—at least, he should be able to ride and to swim; yet I have known lads pass into the army who appear to me deficient in every practical qualification.

For those who are to obtain marks, I consider that mediocrity should not be recognised; but, if the examination were made compulsory in all, you would soon find that the number of candidates above mediocrity would increase, as there are not a few who, desiring to gain admission to the army, and having been negligent in early days, try to make up by excessive work for a short time, and therefore sacrifice health to cram.

But, if you required a good condition of health and physical activity as a part of the examination, you would probably deal a blow at high-pressure cramming which would have very beneficial effects.

I desire not to trespass unduly upon your attention, and accordingly refrain from troubling you with further remarks.

I am, &c.

5.

From the Rev. T. W. JEX BLAKE, D.D., Rugby.

16th February 1878.

ALL very good, except that (5) seems an unreasonable limitation. A man who could do all six well, would be a much better man than one who could do only three of the six exercises.

Cancel (5), and let the maximum of marks (6) obtainable under each head be 200.

The only suggestions that occur to me besides are—

1. In cold weather, test swimming at baths with temperature not below 60° Fahrenheit.
2. Add gymnastics to your competition.
3. Then limit each subject to 200.

Total obtainable maximum 1,400.

6.

From the Rev. A. FABER, M.A., Malvern.

MY own opinion is rather in favour of having a *qualifying* examination in physical exercises than one on which marks depend. The principle of competition is to hold good between one candidate and another on the ground of this intellectual superiority, but with regard to physical *differences* there is little importance. All that is wanted in respect to them is that a candidate be *fairly qualified*; especially, this seems to me desirable at Woolwich, where the course of training (subsequent to admission) already aims at improvement in some of these physical exercises, as, for instance, in

MILITARY ENTRANCE EXAMINATIONS.

riding. I think it would be an excellent suggestion that a qualifying examination should be passed in four of the subjects mentioned; but I should dislike to see an inferior intellectual merit eked out by physical. The two sorts of merit are incommensurable. It may be remembered that merit in these latter may be the result of very accident; as "walking" resulting from the neighbourhood of moors, or "swimming" from the neighbourhood of a river, but I think myself, that if a qualifying examination were held in four subjects, *any* four, previous to admission, and if the course of subsequent training involved instruction (say) in swimming, putting shot, running, and riding, all the desired object would be attained.

Physical Competition.

Leaping, I may say, appears to me inferior in value to the other tests; merit in each of the other *lasts;* but no one leaps after 26 years of age.

7.

From the Rev. G. C. BELL, M.A., Marlborough.

18th February 1878.

IN answer to the inquiries addressed to me, I have the honour to enclose a paper drawn up at my request by Mr. Bull, the master of our Modern School, with the substance of which I entirely agree.

Believe me, &c.

Enclosure in No. 7.

From C. M. BULL, Esq., M.A., Marlborough, Master of the Modern School.

18th February 1878.

REMARKS on the proposal to offer a maximum of 1,200 marks for athletic competition in the entrance examinations for Woolwich and Sandhurst.

[In the following remarks the subject is considered only from the point of view which is natural to the master of a large school.]

It is proposed to add to the present examination in various branches of knowledge a further examination in certain athletic exercises, for those candidates who wish to take up these subjects: it is not proposed to add any compensating marks to those which are already given for knowledge, but indirectly to diminish their value, by allowing muscular vigour and activity to compensate to a considerable extent for relatively scanty attainments in mathematics, languages, history, and other subjects. Of the athletic exercises mentioned, riding must be left out of sight here, as it cannot be practised at large schools. The question therefore is, what effect will be produced on boys at school by the proposed competition in running, walking, leaping, putting the shot, and swimming? Two facts at once present themselves:—

(1.) Candidates for the examination must go into regular training for the three exercises in which they mean to compete; without long and regular training they will have no chance of attaining excellence. Everyone knows that the preparation for the present examinations involves a considerable mental strain on most candidates. Therefore, while they are subjected to a considerable mental strain, they are also to be subjected to a considerable physical strain; brain and body are to be severely taxed at once, at the age of 17–18½. It needs no profound medical knowledge to predict the disastrous end of such a violation of elementary natural laws. A temporary muscular development will be a poor gain when purchased at the price of a weakened constitution.

(2.) As there are only twenty-four hours in the day, this training must supersede the present school amusements of cricket, football, rifle shooting, &c. Is this change desirable for the boy who is by and by to be an officer? The present amusements are not indeed scientific gymnastics; but they make boys vigorous and healthy, they teach them to give and take, to be fair and honourable in observing the rules of the game, to get on with their equals and with their inferiors. In a word, they are social—an inestimable advantage: thus they are most useful to the future officer, in his relations to his brother officers, and to his men, and to society outside the regiment. It is proposed to substitute for these social games certain gymnastic exercises which are by their nature solitary and unsocial. Does not the mere statement of the case condemn the proposal? Both as an old lover of school games and of rifle shooting, and as one who has had something to do with preparing boys for Woolwich and Sandhurst, I do heartily regret this scheme, which gives up the gold for the brass.

MILITARY ENTRANCE EXAMINATIONS.

Physical Competition.

(3.) It also appears very probable that in several cases, in each entrance examination, a lower amount of knowledge will be necessary than that which is at present attained. Those candidates who get good marks in the athletic part of the examination, will probably require less mathematical or other knowledge to enable them to win a place in the list. Is the standard of attainment already so high that it is desirable to lower it? My own experience would certainly answer in the negative.

For these reasons I think the proposed alteration unwise. It seems to me certain that it will lower the standard of intellectual attainments, injure the health of boys, and substitute unsocial for social amusements.

But if it is to be made, I beg to suggest that:—

(1.) The scale of marks offered for physical attainments should be considerably lowered; or that, if the proposed scale is maintained, the *qualifying* examination in intellectual subjects should be made harder; so that no boy should get marks for muscles unless he has given proof of some solid knowledge in mathematics and one language at least, besides English.

(2.) The choice of subjects in physical exercises should be larger, while the candidate should still be limited to three subjects, and endurance, rather than mere muscular strength or shortlived activity, should be tested; *e.g.*, spade and pick exercise might advantageously be added, if the examination is of a thoroughly practical kind, and care is taken that the pick is not too heavy.

8.

From the Rev. C. B. SCOTT, D,D., Westminster.

18th February 1878.

NEITHER I nor my colleagues see any serious objection to the draft scheme for allowing marks for physical qualifications in the army examinations with the limitations proposed. It is evident that *physique* is a matter of importance in the selection of officers, and if simple tests alone be used, the danger of increasing the amount of interest and time at present devoted to games in schools and at the university would not apparently be great.

We attach much importance, therefore, to this restriction, that the test be only in simple exercises.

9.

From the Rev. G. RIDDING, D.D., Winchester.

18th February 1878.

I SYMPATHISE with the idea about military examinations, which has prompted the circular that I have received from you.

The reports on the results of the examinations that have been held have, however, very much modified my opinion about the point asked in that circular. They represent that the candidates have not shown any deficiency in the physical requisites for soldiers.

Apart from these physical requisites of health and strength, I am not disposed to attach much value myself to successful match performances in walking, running, and jumping. I do not think that my experience would justify me in attaching any special soldierly value either to the character or the activity of the boys who have won such matches at school. So long as it is not felt that the examinations introduce inferior *physique*, or deficiency in the moral qualities upon which, after all, endurance and activity of body and mind very much depend, I should not myself desire to advise the introduction of any such match competition into the examination on which the candidates are selected. Military exercises will form a part of their military college course, and the knowledge of this will make the candidates more and more anxious to prepare themselves beforehand to enter creditably upon them there.

Possibly some guarantee might be required of some "pass standard" of performance in these points as part of their medical certificate, but I should not advise more than this, even if I did not see practical difficulties of considerable gravity in an attempt to combine two such opposite sets of examination subjects and two such distinct bodies of examiners as would be involved.

Swimming, I should (perhaps on somewhat different grounds) desire to see treated in a similar way.

I feel more difficulty in speaking about riding, as, on the one hand, a valuable military accomplishment, and one that is best learnt young, and, yet on the other, an

accomplishment of the rich, and one which therefore might exclude many of the best candidates. If it can also be taught adequately at a military college I should, on the whole, say the same of it as of the others.

I have, &c.

10.

From the Rev. W. HAIG BROWN, LL.D., Charterhouse.

18th February 1878.

IN reply to your inquiry I have to say that, in my opinion, the addition of marks for physical qualifications in competitions for admission to Sandhurst and Woolwich will greatly improve the character of those examinations, regard being had to the objects for which the candidates are selected.

I do not think that any reasonable objection can be made to the scale of marks proposed. Perhaps some difficulty may arise in determining what mediocrity is, but this will be for the examiners, who, I doubt not, will be equal to the occasion.

I am, &c.

11.

From the Rev. E. THRING, M.A., Uppingham.

19th February 1878.

IN my opinion the proposal to give marks for physical qualifications in the Civil Service is most valuable.

Much harm is done in the world by men who are all head, and have none of the powers or sympathies of ordinary humanity; who, in the good old phrase, "have never been boys."

Such men often attain to power, but are bad rulers of men.

On this account, as well as on the more obvious one of common usefulness, I hail the acknowledgment of physical life-power.

The marks, judging by the ordinary results of competition, and its effect in lowering a total, seem to me reasonable.

I have, &c.

12.

From the Rev. W. BAKER, D.D., Merchant Taylors' School.

19th February 1878.

IN answer to your Lordship's letter of the 14th instant, I beg to say that I see no serious objections to the proposal to give marks for physical as well as literary qualifications in the examinations for Woolwich and Sandhurst, whilst I see many obvious advantages in such a course.

The proportion of marks to be given for physical qualifications seems to have been carefully considered, and I do not think there is anything that at present occurs to me to add to the suggestions brought to my notice.

I have, &c.

13.

From the Rev. H. M. BUTLER, D.D., Harrow.

20th February 1878.

I HAVE the honour to acknowledge the receipt of your letter of February 14th, inviting me to state my opinion on the proposal to take account of physical as well as literary qualifications in admitting young officers into the army.

In my judgment the change proposed would be a decided and an important improvement, nor does it occur to me that the mode of giving effect to it, as stated in your Lordship's memorandum, can be altered for the better.

One suggestion, however, possibly a superfluous suggestion, I would venture to offer. It seems to me important that the examination in physical qualifications should be carried out, like the rest of the examination, in a thoroughly *private* manner, in the presence, that is, of the military examiners, and of no one else. If the public were in any way admitted, or if reports of the performances of the candidates were sent at the time to the newspapers, I believe that an injurious element would be introduced.

MILITARY ENTRANCE EXAMINATIONS.

Physical Competition.

Physical qualifications are, of course, of the utmost possible import young officer, but it is not necessary or desirable to invest them with *éclat*.

I have, &c.

14.

From the Rev. E. C. WICKHAM, M.A., Wellington College.

20th February 1878.

I HAVE the honour to acknowledge your Lordship's letter of Feb. 14, communicating to me the proposal to introduce physical subjects into the competitions for Woolwich and Sandhurst, and inviting the expression of my opinion upon it.

With the general object of the proposal I should entirely concur, so long as the scale of marks was so adjusted that the new subjects should only affect the result where (as is usually the case towards the bottom of a list in a competitive examination), the intellectual qualifications are pretty equal. As to this I should venture a little to question the proposed maximum of 400. Most really athletic boys would offer three subjects from the proposed list, and score in all three, so that a good proportion of the 1,200 might not infrequently be obtained. I should also suggest whether Woolwich (where intellectual attainments are most specially necessary) and Sandhurst do not stand on different grounds, and whether the maximum, even if thought right for the latter, is not too high for the former.

With respect to the proposed list I should question the wisdom of including *walking*. It is of all school athletics the one which I am most afraid of for boys, as straining them unnaturally. I feel some doubts also of the effect of such a great stimulus to running—*racing*, I mean; cross country running, running at football, &c. are not nearly as trying. I hope the sanitary result of stimulating these two exercises among boys will be considered.

On the other hand, I am sorry not to see gymnastics. They are now common at most schools, and as boys are trained under careful supervision the risks of injury are reduced to a minimum.

I am prepared with no practical suggestion, but it is a great loss that cricket and football, the best exercises for boys generally, should be incapable of recognition.

I have, &c.

15.

From the Rev. E. M. YOUNG, M.A., Sherborne.

20th February 1878.

IN answer to the inquiry your Lordship is good enough to address to me with respect to the recognition of physical qualifications in the competitions for admission to Sandhurst and Woolwich, I have to say that, while I am decidedly in favour of giving more weight to the "physique" of candidates than has been customary, I should greatly deprecate the addition to these examinations of anything like a series of athletic contests.

My view is that extension in certain directions should be given to the present medical examination which, instead of being, as now, of a merely qualificatory character, should henceforward be an examination in which *health*, *strength*, and *activity* should be allowed to score.

For this purpose it would be desirable, in my opinion, that the Commissioners should obtain, in addition to the aid of the scientific men composing the Medical Board, whose business is with the stethoscope and measuring tape, the assistance of gentlemen competent to judge of proficiency in certain exercises, *e.g.*, riding, swimming, and gymnastics, which candidates should be allowed, if they pleased, to offer along with literary subjects.

No harm, in my judgment, could result from this; whereas, any change which would import the sensationalism of an olympic contest, or, to speak less classically, of Lillie Bridge, into the examinations for admission to Her Majesty's service, would, I feel, be a step in the wrong direction, as tending to encourage the vulgar element which is too rife in our public schools, and which it is one of the chief difficulties of head masters to keep in check without unduly depressing the taste for bodily exercise.

I am, &c.

16.

From the Rev. J. J. HORNBY, D.D., Eton.

22nd February 1878.

Physical Competition.

I MUST apologise for not having written to you sooner on the subject of your Committee's proposal relating to the physical qualifications of candidates for admission to the army. I hope that this delay, which has arisen from a great pressure of work, will not have caused inconvenience.

With regard to these proposals generally, I must say that I welcome them very warmly. It has always seemed to me that competitive examinations, as conducted at present, while obviously furnishing no test of many of the most important qualifications which go to make up a good officer, fail even as intellectual tests, except at a somewhat higher standard than that which seems desirable or practicable for the army in general. By this I mean that, while in a very high examination, such as that for a university scholarship or the mathematical tripos at Cambridge, it may be assumed that the best candidates are persons of considerable intellectual power, and this may be taken as some "set off" against deficiencies in other respects, no such assumption holds good in the case of large examinations at a much lower level. It often falls within the experience of schoolmasters, that of two pupils of no very high intellectual capacity, and who are much on a level in attainments, one will get low marks from the examiners (quite fairly, no doubt, on a view of the papers before them), while another, greatly inferior to his schoolfellow in force of character, judgment, good sense, manner, and address, will be successful; the intellectual difference between the two being really quite inappreciable, and the slight superiority of the one in marks, though fairly earned, furnishing no set off against the superiority of the other in higher and rarer qualities. Of course I do not forget that the army requires the services of some men of the highest intellectual power and, I suppose, of a good number of men well furnished with scientific attainments. My contention is only that, with a view to the great mass of officers, the present system of selection admits of great improvement. It seems to me that the proposals of your Committee tend in this direction, and may be expected to furnish a salutary corrective of some of the evils to which I have alluded.

With regard to details, it only occurs to me to say that riding and swimming, especially the former, seem to me to deserve to be placed on a much higher level than some of the exercises, *e.g.*, putting shot, which are mentioned in the Committee's circular. Perhaps I may add that I have some little doubt about putting shot as an exercise for boys. I have no positive medical evidence to quote against it, but I know that it is viewed with suspicion by some very good judges of physical exercises, and I have even been asked to forbid it at Eton on the ground that it involves great risk of bad strains and other mischief; but your Committee will, no doubt, have excellent medical advice on this subject.

I am, &c.

17.

From the Rev. E. H. BRADBY, M.A., Haileybury.

25th February 1878.

IN reply to your circular of February 14th, on the proposal that marks should be given for physical in addition to literary qualifications at the competitions for admission to Sandhurst and Woolwich, I have the honour to submit the following remarks.

First, as regards the plan generally, I believe it to be an exceedingly good proposal. So far as I understand the probable working of the plan, it will not exclude the best men intellectually among the candidates; these will still appear in the upper part of the list, as heretofore, though possibly in a different order, but it will help very materially to distinguish between what we may call the second best men, and to select among them those most fitted to discharge the duties of an officer. Among those who come between the 50th and the 150th on the list in a Sandhurst, or even Woolwich examination, I should much prefer, had I to pick men for Her Majesty's service, those who could ride or run or swim well, for instance, to those who could not.

The tendency of the change would be to make idlers and "loafers" (if the expression may be pardoned) among the clever boys look to their physical exercises, and to give a fairer chance to a very useful class of young Englishmen, who are in some danger of being crushed out by the purely literary character of our present competitions.

MILITARY ENTRANCE EXAMINATIONS.

Physical Competition.

Next as to details.—

4. Riding combines nerve and activity, and is likely to be so especially valuable and needful that it should, perhaps, be rated higher than the other exercises.

On the other hand, only the comparatively wealthy can afford to learn to ride, and this may be thought to give them an undue advantage.

I would suggest that walking and running, and perhaps even leaping also, might be classed together as *one* exercise and a fresh head introduced, which should include gymnastics, boxing, and singlestick or fencing.

A medical man of long experience in India has observed to me that shooting with ball at a mark is a good test of nerve as well as of general physical ability.

6. A maximum of 1,200 obtainable might give too great an influence to these subjects. In literary work the maximum is, I suppose, never gained: in these subjects it might be gained frequently.

I hope it will not be thought out of place if I observe, in conclusion, that it might prove of great advantage to the State to extend the proposal to competitions for the Indian Civil Service. It is far more wanted there than in the army. In the army, professional opinion and many other causes aid to keep up a high standard of bodily activity, but to the Indian Civil Service the veriest bookworm may gain entrance, and remain a bookworm only, till he discovers at some critical moment, to his cost and ours, that other qualifications besides knowledge are required in a ruler of men.

I am, &c.

18.

From F. W. WALKER, Esq., M.A., St. Paul's School.

2nd March 1878.

I AM so little of an athlete myself that I had not thought of expressing an opinion on the circular. The idea is admirable, nor do I see anything to criticise in the details. For myself, I should have added fencing and perhaps some combination of gymnastic *tours de force*.

I am, &c.

19.

From the Rev. A. J. CARVER, D.D., Dulwich.

2nd March 1878.

I HAVE the honour, in compliance with your Lordship's request, to submit the following observations upon the proposals for giving marks for physical qualifications in the competitions for admission to Sandhurst and Woolwich.

I may state briefly that in the general principle of the proposals I entirely concur.

The modern system of competitive examinations, admirable as it is in many respects, obviously supplies a test of but one kind, and that not necessarily the most important kind of qualification for a life of practical energy.

That some account ought if possible to be taken of physical as well as of literary qualifications, especially in competitions for the military services, can scarcely, I think, be seriously disputed. At present, however, powers of endurance, and active habits of body, and yet more that force of moral character for the want of which no intellectual attainments can compensate, remain without test or recognition of any kind.

The proposed regulations would supply a direct test of purely physical qualifications, but it is not unfrequently assumed that moral qualifications of any kind cannot be really tested except in the experience of actual life.

This I believe to be only partially true. I am persuaded that excellence in physical exercises will be generally found to be a trustworthy evidence of moral force of character as well as of physical power. I do not of course deny that the highest moral energies may exist in connexion with a feeble and sickly frame. But these are cases which by their very nature are excluded from the present consideration. On the other hand, I know of no training so effectual in forming habits of discipline and self-control, or in imparting a healthy and vigorous tone to mind as well as to body, as that supplied by the playfield and gymnasium of a public school.

I may add that even as regards intellectual progress, I have seen in a large number of cases within my own experience, that of the successful candidates in these competitions, those who have combined with their literary studies an active interest in physical exercises, have also succeeded best in winning their way forward afterwards, and even when they have not occupied a high position at their first admission, have steadily improved their place at each periodical examination.

MILITARY ENTRANCE EXAMINATIONS.

Physical Competition.

I trust that in these remarks I shall not be thought to be deviating from the strict purport of the questions proposed to me. I have long since formed a very decided opinion upon the subject, and I have had the opportunity of testing its correctness by a wide experience extending over many years; and I am convinced that there is a closer connexion between excellence in these physical qualifications which it is now proposed to test, and practical efficiency in the duties of active life, than is generally acknowledged.

With regard to the details of the scheme I need make but few observations.

Notwithstanding the views which I have stated above, I quite agree that the competition in these subjects should be voluntary, the possession of adequate health and strength being carefully tested by the qualifying examination. The rejection of candidates of exceptional intellectual power, who may not be specially proficient in any physical exercise, will thus be avoided.

The proportion of marks obtainable by any candidate (1,200) appears to me to be reasonable. This proportion should, I think, be larger (as it is on the present scale of marking) for Sandhurst than for the scientific branches of the service at Woolwich.

With respect to the mode of conducting the examination, the Civil Service Commissioners will, no doubt, have the assistance of those most competent to advise them in each several subject. I will only add one or two remarks which suggest themselves to me.

The competition in "*riding*" will, I presume, include leaping over bars and ditches.

With respect to "*walking*" I confess that I am not satisfied with the ordinary tests.

The power of walking 1 mile or 1½ miles at a purely artificial pace in the shortest possible time is of little value. I have known many who could walk 20 or 25 miles at a steady vigorous pace without any sense of fatigue, who would utterly fail in the one mile course against time in an ordinary walking match. A "good form," as it is technically called, and free action of the limbs, with of course power of endurance, are, in my opinion, of far more value than the ability to cover the greatest possible distance in the shortest time. In "running" the case is different. There, speed is necessarily of the essence of the competition; in walking, endurance rather than speed should be tested.

In "leaping" I presume that both the high leap and the long leap will be included.

I have, &c.

20.

From the Rev. H. KYNASTON, M.A.

The College, Cheltenham, 2nd March 1878.

I BEG to state that I am decidedly in favour of the plan generally, as likely to conduce to a rational use of outdoor manly exercises, in the intervals of intellectual work, which will militate against many idle habits, both during school life and after admission at the Royal Military Academy or College, and subsequently in the active duties of Her Majesty's service.

As to the details of the plan, it occurs to me that *riding*, being an exercise which cannot without almost insurmountable difficulty be encouraged at public schools, might be omitted from the competition: also that *putting the shot* has no element either of usefulness or skill, such as should recommend it for a place among skilled physical qualifications.

It might also be quite possible, I should think, to arrange that the *swimming* should be a subject at any time of the year.

I am, &c.

21.

From the Rev. J. PERCIVAL, LL.D., Clifton College.

5th March 1878.

NOTES ON PROPOSALS.

(1) and (2).—If physical qualifications are to be taken into account, I should desire to see this part of the competition made *compulsory* with a *low mark*, going on the assumption that certain physical aptitudes are indispensable for efficiency. Such a requirement would have the good effect of inducing intellectual boys, of a bookish turn, to acquire some skill and strength, and this might prove the chief gain of the proposed plan.

MILITARY ENTRANCE EXAMINATIONS.

Physical Competition.

Marks should be given in proportion to merit to every candidate who qualified.

(3), (4), and (5).—I am of opinion that the exercises should be grouped according to some principle, *e.g.* (this arrangement is merely intended to be illustrative of my meaning):—

A. Tests of general physique, activity, and endurance:—
- Walking.
- Running.
- Leaping.
- Some definite gymnastic or athletic exercises carefully selected, with the view of testing strength and endurance.

B. Tests of nerve, and particular kinds of skill:—
- Riding.
- Swimming.
- Some definite gymnastic exercises, possibly including fencing, boxing, &c.

Candidates should be tried in all parts of A. and B., notice being given that what is indispensable is only that a certain minimum aggregate of marks be obtained, not that a candidate must pass in each exercise.

(6.)—I think the proposed maximum of marks *too high*—

(1.) Because of the experimental nature of this competition.

(2.) Because of the risk of encouraging athletic boys to rely on their athletics, fostering the athletic spirit too much, and discouraging the more intellectual.

From my experience of the kind of young men that go into the army, I am strongly of opinion that everthing possible should be done to intellectualise the profession, and nothing done which might in any way tend to discourage the more intellectual.

ENCLOSURE 3.

Letter addressed by Mr. E. E. BOWEN to the Civil Service Commissioners, and communicated by them to the Secretary of State for War, dated Harrow, 30th March 1877.

(*This letter is printed at p.* 571.)

ENCLOSURE 4.

From Mr. E. E. BOWEN to a Member of the Committee.

Harrow, 9th February 1878.

* * * * * *

I AM much struck by your saying that hesitation is felt as regards a *general* assignment of marks for apparent health and strength. I cannot share that feeling myself. Having for many years seen here a constant succession of boys engaged in school work at one moment and in athletic exercises at another, I have no doubt whatever as to the ease with which the strong and healthy could be discriminated in a few minutes from the rest. I have had before me to-day a class of 20 boys of about the age of Woolwich or Sandhurst candidates, some of whom in fact will shortly present themselves to you for examination; and since beginning to write this I have written down for each of them an assigned mark, varying from 0 to 500, with a very complete certainty that I am not far wrong. A doctor could do this still better. A fair result might be attained with the help of a stethoscope, a tape, and a mere glance at the figure and complexion; and there could be no objection to allowing an examiner to use what additional means he liked, provided that the desired object were made clear to him, and that he reported from time to time on his methods. From what I know of the candidates who enter, I do not think that there would be among them the smallest reluctance to offer themselves for such an examination. It would be of the same kind as that which is now enforced on all candidates for the army, though it would, no doubt, be more careful and severe.

Permit me to press this view by another consideration. I think that such an assignment of marks would be absolutely necessary in order to correct the results of any further tests. There is, after all, something accidental in (say) the ability to jump well; and I should shrink from giving one third (perhaps) of the total physical marks to a candidate who might possibly, however nimble, have a weak circulation, a tendency to varicose veins, or a laboured breathing. Once abandon general physical competition, and a lad with any of these defects (if *passed* by the

present medical examiners, who are not very strict) might conceivably gain the highest marks assigned for physical excellence.

MILITARY ENTRANCE EXAMINATIONS.

Physical Competition.

Passing on to the suggested special competitions, I will say that I shall be very glad if the time comes when all of them can be easily and profitably used for examination; but I hope I may be forgiven if I venture to urge caution at the outset. It may happen, and it not improbably will, until the examiners have clearly proved their sternness in rejecting mediocrity, that almost all the candidates who have passed the preliminary examination will enter for one or more competitions. With the possible exception of riding, I think that all the exercises which you mention may be managed either at once or ultimately; but the practical difficulties will, for the first year or two, be very great. Though I have had some experience in organising such things, I invariably am surprised at the time which is taken in managing them. Running is soon over, and swimming need not take long; but jumping must involve delay, and riding still more. If 200 or 300 men enter for each of these, and the times have to be arranged for each so as not to clash with their paper work, it is hard to see how the difficulties of the organization can be surmounted.

But they are difficulties which will gradually diminish; and if a modest and humble beginning were made, would it not be possible gradually to add fresh tests to the previous ones? Indeed, it is not clear that fresh notice would be required for them, or even (unless there were *choice* of exercises) for the *details* of the first proposed competition.

May I remind you, too, that the proposal will be very new to the public, and popular though it will probably be in the main, it may be desirable to avoid any appearance which might be thought too theatrical or too striking to the imagination?

On the whole, with deference to yourself and those gentlemen who have entered on the subject, I would suggest that the special part of the competition should in the first instance be limited to running and carrying shot, and perhaps swimming.

I will add one or two remarks on matters of detail.

1. The total maximum of marks suggested is 1,200. May I remind you that the average total of marks gained is only about 4,000, and that the addition proposed will be greater than it seems, because a deduction is made from almost all the other subjects, and none will be made from this?
2. I would suggest that not only the examination itself, but the details of its results, should be kept private. The physical aggregate must be published, but the items of which it is composed might be kept back as easily as the marks given for each separate question of a paper. Do what the authorities will, there will be a danger of vulgarising the competition, and privacy will be one means of avoiding this.
3. If running be one of the tests, it must be against time. I submit that about 300 [400] yards is the best distance; anything much less is hard to judge, while a long race is open to some objection in regard of the necessary training, as well as the length of the performance.
4. It will be remembered that riding is taught at Sandhurst to all future officers. If it be adopted for competition, it will be necessary, I suppose, to borrow one of the military riding schools; but I cannot conceive that any performances in these can give a very valuable criterion of really good riding.
5. Putting the shot always brings out very strong men. But it is after all an exceptional gift, and many of the strongest men cannot succeed at it; ought it to rank as high as other tests? On the other hand, carrying shot is, I cannot doubt, the very best test for mere muscular strength that exists.
6. I am glad that you mention no gymnastic exercises. To offer marks to them would be a premium not on physical excellence but on very special preparation.
7. If I were asked to fix a scale of marks myself, I would assign 1,000 to the whole, giving 500 to general physical merit, and the rest to special tests, of which running should have the largest share.

I have only to add that I shall be happy to come up to London at any time if it should be thought that I can be of any use towards the further consideration of the subject.

Believe me, &c.

MILITARY ENTRANCE EXAMINATIONS.

Physical Competition.

The Director-General of Military Education, to the Secretary, Civil Service Commission.

SIR,

I HAVE the honour to request that you will inform the members of the Civil Service Commis desired by His Royal Highness the Field Mar Chief to propose to them a conference as to the l out the recommendations contained in the rep recently rendered to the Secretary of State for W the addition of a physical competition to the examination for admission to the Army. I have, therefore, to request that you will be good enough to inform the members of the Commission that I shall be happy to meet them at such date as may be convenient to them, and to acquaint me with the result.

I have, &c.

The Secretary, Civil Service Commission, to the Director-General of Military Education.

SIR, 24th May 1878.

IN reply to your letter of the 24th instant, I am directed by the Civil Service Commissioners to acquaint you that they will have pleasure in complying with the wish of His Royal Highness the Field Marshal Commanding-in-Chief that they should confer with you as to the best mode of carrying out the recommendations contained in the report of the Committee recently rendered to the Secretary of State for War, on the subject of the addition of a physical competition to the examination for admission to the Army, and that they would be glad if it should suit your convenience to meet them at this office on Tuesday next, the 28th instant, at 12 o'clock.

I have, &c.

The Secretary, Civil Service Commission, to the Director-General of Military Education.

SIR, 31st May 1878.

WITH reference to your letter of the 24th instant, and to my reply of the same date, I am directed by the Civil Service Commissioners to transmit to you a copy of a memorandum of the results of the conference held here on the 28th instant between yourself and the Commissioners.

I am, &c.

ENCLOSURE.

MEMORANDUM.

At a meeting held at the office of the Civil Service Commission on 28th May 1878, in pursuance of a letter from the Director-General of Military Education, dated the 24th of that month; present, Lord Hampton, Lieut.-General Walker, Sir George Dasent, Mr. Walrond;

General Walker having, after some preliminary discussion, suggested that the Commissioners should put themselves in communication with such persons as they might think fit, with the view of settling the method of carrying out the proposed physical competitions for the Army, the Commissioners stated that they did not regard

themselves as having authority at present to take any action in the matter, but that they would be quite willing to undertake the arrangement and superintendence of such examinations if informed that it was the wish of the Secretary of State for War and His Royal Highness the Field Marshal Commanding-in-Chief that they should do so; and General Walker was requested to report to His Royal Highness accordingly.

MILITARY ENTRANCE EXAMINATIONS.

The Director-General of Military Education to the Secretary, Civil Service Commission.

SIR, 1st August 1878.

IN forwarding the enclosed letter from Mr. ——, which I am to request may be returned with your reply, I have it in command to request you to be so good as to move the Civil Service Commissioners to acquaint me, for the information of His Royal Highness the Field Marshal Commanding-in-Chief, with their grounds for excluding modern languages, other than French and German, from the competition for entrance to the Royal Military College.

As to modern languages in examinations for Royal Military College.

I have, &c.

ENCLOSURE.

DEAR LORD BURY, Bagshot, 22nd July 1878.

I WISH one of the young men reading with me for the Army to take up Italian, but it seems that he can only take it up at the preliminary examination.

In the examination for direct commissions a few years ago Italian was one of the subjects, and it seems strange and inconsistent that a candidate may take it up at the preliminary but not at the further examination. May I ask you if it is possible to add Italian and Hindustani to the languages mentioned in paragraph 18 of the Regulations respecting examinations for admission to the Royal Military College?

Yours obediently,

——.

The Secretary, Civil Service Commission, to the Director-General of Military Education.

SIR, 9th August 1878.

IN reply to your letter of the 1st instant, in which you inquire on what grounds the Civil Service Commissioners exclude modern languages, other than French and German, from the competitive part of the examination for admission to the Royal Military College,

I am directed by the Civil Service Commissioners to acquaint you, for the information of His Royal Highness the Field Marshal Commanding-in-Chief, that, as paragraph 18 of the Regulations which were issued with G.O. 88 of 1876 restricts the examination in modern languages to French and German, the Commissioners are not at liberty to allow candidates to take up any modern language other than these at the "further examination." As regards the preliminary examination, however, I am to state that it is the practice of the Commissioners, in accordance with the 15th paragraph of the Regulations, to examine candidates in any modern language which they may think fit to take up.

The communication from Mr. —— which was enclosed with your letter is herewith returned.

I have, &c.

———

MILITARY ENTRANCE EXAMINATIONS.

As to modern languages in examinations for Royal Military College.

The Director-General of Military Education to the Secretary, Civil Service Commission.

SIR, 21st August 1878.

IN acknowledging the receipt of your letter of the 9th instant, I am desired by His Royal Highness the Field Marshal Commanding-in-Chief to state, for the information of the Civil Service Commissioners, that, although the subjects of examination for entry to the Royal Military College were settled after mature consideration and consultation with the Commissioners, and were further based on the recommendations of the Royal Commission on Military Education, His Royal Highness would be obliged if the Commissioners would be so good as to state their views with regard to the introduction of other modern languages besides French and German at the further examination.

I have, &c.

The Secretary, Civil Service Commission, to the Director-General of Military Education.

SIR, 2nd December 1878.

REFERRING to your letter of the 21st August last, in which you request the Civil Service Commissioners to state, for the information of His Royal Highness the Field Marshal Commanding-in-Chief, their views in regard to the introduction of other modern languages besides French and German into the further examination of candidates for admission to the Royal Military College * * *

I am directed by the Civil Service Commissioners to acquaint you that they have fully considered the question how far it is expedient and practicable to include other modern languages in the programme of the examination, and I am to state, for the information of His Royal Highness, the conclusions at which they have arrived.

The proposal is liable to two obvious objections, namely, (1) that it would tend to lengthen the time occupied by the examinations, which has already, as His Royal Highness is aware, been the subject of occasional complaints, and (2) that it would add to the expense of them, probably more than in proportion to the results obtained. The Commissioners are the less able to disregard this consideration, as the expenditure on the Army entrance examinations is already large, amounting in the current year to nearly 3,500*l.*, and no part of it is met, as in all open competitions for the Civil Service, by fees levied from the competitors.

While the Commissioners have thought it right to mention these objections, they feel that the main principle by which the question should be decided is the advantage likely to be gained for the public service.

The military authorities are of course better able than this Board can be to estimate the degree of advantage which may be expected from the admission into the service of a small number of officers acquainted with one or more of the less usually known languages of Europe or Asia. But the Commissioners may perhaps be allowed to observe that if it be right to give weight to a knowledge of Italian, Russian, Spanish, or Hindustani in the competitions for admission to the Royal Military Academy, there is no apparent reason for refusing to give like weight to it in competitions for admission to the Royal Military College. Least of all does this seem reasonable in the case of Hindustani, which forms, alternatively with German, a part of the obligatory course of study at the Staff College.

MILITARY ENTRANCE EXAMINATIONS.

As to modern languages in examinations for Royal Military College.

If it be asked how far the proposed change would be likely to introduce into the service any considerable number of gentlemen well acquainted with the less common languages, the experience of the Commissioners would not justify them in giving a very encouraging answer to the question. Out of 661 cadets who have passed into the Academy under the scheme of examination which embraces these languages, three only obtained marks in any of them, one in Italian, and two in Spanish. During the last five years 6,420 candidates for first appointments in the cavalry and infantry, and for the Royal Military College, have undergone preliminary examinations under rules which allowed them to select any modern language as the one in which they would qualify; but only four have named languages other than French or German, viz., three Hindustani and one Spanish. On the other hand, it is, of course, possible that other candidates may have possessed a knowledge of some of the extra languages, though preferring to offer French or German for examination. Moreover, however small may be at present the number of students of the less known tongues, it can hardly be doubted that this number would in time become greater if marks were given for them at these competitions; more especially if it should be thought fit to encourage the subsequent further study of them at the Staff College, or elsewhere, by the offer of pecuniary rewards, on the principle which is acted upon in the Diplomatic Service, and in the Civil Service of India.

It only remains for the Commissioners to express their readiness to do their part in carrying into effect the suggested alteration, if, on the whole, it should, in the judgment of His Royal Highness, appear to be desirable.

I have, &c.

The Director-General of Military Education, to the Secretary, Civil Service Commission.

SIR, 10th December 1878.

IN acknowledging the receipt of your letter of the 2nd instant, I have it in command to acquaint you, for the information of the Civil Service Commissioners, that, under the circumstances therein stated, His Royal Highness does not consider that it would be desirable to introduce any other modern language than French and German into the "further examination" of candidates for admission to the Royal Military College.

I have, &c.

The Secretary, Admiralty, to the Secretary, Civil Service Commission.

SIR, 21st February 1878.

The Royal Marine Artillery.

I AM commanded by my Lords Commissioners of the Admiralty to acquaint you that they propose to offer four appointments to the Royal Marine Artillery among the candidates to be examined for admission to the Royal Military Academy at the special examination to be held next month.

These appointments will be only open to such candidates as may be fully qualified under the accompanying regulations, and who may have

MILITARY ENTRANCE EXAMINATIONS.

The Royal Marine Artillery.

signified to the Secretary of the Admiralty their desire to be considered as candidates for the corps.

My Lords, therefore, desire me to request that the Civil Service Commissioners will be good enough to cause a list of the successful and qualified candidates to be forwarded for their information as soon as the result of the examination is known; and they would further be pleased to receive the names of any candidates who may notify their desire to join the Royal Marine Artillery.

I am, &c.

ENCLOSURE.

(Extract.)

FIRST APPOINTMENTS TO ROYAL MARINE ARTILLERY.

Regulations for Admission, &c.

Admiralty, 14th May 1877.

1. Admission to the Royal Marine Artillery as probationary lieutenants will be offered to the successful candidates in order of merit (according to the number of vacancies) at the Open Competitive Examination for admission to the Royal Military Academy at Woolwich. The examinations will be conducted by the Civil Service Commissioners, and will be held twice a year, namely, in July and December.

Candidates who have received permission from the Horse Guards to attend the examination, and who are desirous of obtaining an appointment in the Royal Marine Artillery, should send in their names to the Secretary of the Admiralty, to whom all inquiries on the subject should be addressed.

2. The limits of age will be from 16 to 18, the candidates being required to be within those limits on the 1st day of January next following for the Winter Examination, and on the 1st of July for the Summer Examination. They must be 5 ft. 5 in. in height.

3. The successful candidates will be appointed lieutenants on probation. They will proceed to the Royal Naval College, Greenwich, on the 1st October, and after the Easter vacation.

* * * * * *

The Secretary, Civil Service Commission, to the Secretary, Admiralty.

SIR, 26th February 1878.

HAVING laid before the Civil Service Commissioners your letter of the 21st instant, I am directed to acquaint you, for the information of the Lords of the Admiralty, that in accordance with your request the Commissioners will, as soon as the result of the next examination for the Royal Military Academy is known, forward a list of the successful and qualified candidates, understanding the term "qualified candidates" to mean those who may have passed the preliminary examination described in paragraph 9 of the enclosed Regulations.*

I am to add, with reference to the concluding words of your letter, that candidates who may wish to join the Royal Marine Artillery are more likely, the Commissioners apprehend, to apply to the Military Secretary than to this Department; but the Commissioners will, as desired, transmit to you the names of any persons whose applications may reach this office.

I am, &c.

---

* *See* Regulations issued with G.O. 89 of 1876, printed at p. 256.

CIVIL SERVICE OF INDIA.

INDIA CIVIL SERVICE.

Destination of selected candidates.

The Under Secretary of State, India Office, to the Secretary, Civil Service Commission.

SIR, 25th January 1878.

I AM directed by the Secretary of State for India in Council to transmit to you, for the information of the Civil Service Commissioners, copy of a despatch from the Government of India, dated 1st November, No. 97 of 1877, on the subject of the destination of candidates selected for the Covenanted Civil Service of India, and of my despatch in reply.

2. I am instructed to request that the substance of the two despatches may be communicated to each selected candidate before he chooses the Presidency in which he is hereafter to serve.

I am, &c.

ENCLOSURE 1.

To the Most Honourable the Marquis of Salisbury, Her Majesty's Secretary of State for India.

MY LORD MARQUIS, Simla, the 1st November 1877.

WE have the honour to address your Lordship on the subject of the destination of candidates selected for the Covenanted Civil Service in this country.

2. Under existing rules order of merit in the competitive examination determines priority of choice of locality for service in India. The highest candidates on the list most frequently choose the North-western Provinces, Punjab, and Oudh, the next favourite destination is Lower Bengal, and the rest select either Madras or Bombay. We have, as a rule, taken young civilians allotted to the North-western Provinces or the Lower Provinces of Bengal for service in British Burma, the Central Provinces, and Assam, but as these provinces are unpopular with young civilians, we often experience great difficulty in supplying vacancies which occur there. It is urged by those who object to go to British Burma or Assam that as they have been permitted by Her Majesty's Government to select a particular province, it is unreasonable to send them against their will to another province, especially after they have made themselves familiar with the languages of the province which they originally selected.

3. We regret the necessity which compels the transfer of civilians from the provinces which they were permitted to elect, but we hold that every Government servant is bound to serve wherever the Government requires him to go; and we beg that your Lordship will cause future candidates for the Civil Service to be informed that though the Government of India will, as far as possible, respect the choice made, and will be prepared to consider each officer's convenience, the first election and allotment cannot be final and absolute, but must be subject to the exigencies of the Public Service. We would, however, wish it to be understood that transfer to British Burma or to Assam will not necessarily be permanent, as we think it will be beneficial to these smaller administrations if a stream of officers trained under a larger Government can be made to flow through them, so that an officer can, as a rule, after a few years' service in the smaller administration, return to the province from which he was transferred whenever he is of sufficient standing to expect promotion in the larger province. On this point we beg to enclose for information a copy of a recent correspondence* with the Government of Bengal.

4. If your Lordship concurs in these suggestions, we should wish all young civilians to be instructed accordingly, and to be informed that, as a rule, they will receive orders as to their destination on arrival at Bombay. We also request that recruits for the Upper Provinces of India may

* From Government of Bengal, No. 1,351, dated 11th September 1877.
To Government of Bengal, No. 832, dated 11th October 1877.

INDIA CIVIL SERVICE.

Destination of selected candidates.

not be directed absolutely to report themselves at Allahabad, or told that their pay will begin there. They should be told to report themselves at Bombay, and only if they find no instructions awaiting them there, at Allahabad; and they should be informed that their pay will begin at any place to which they may be directed by the orders awaiting them at Bombay to proceed, and only in the absence of such orders at Allahabad. These instructions are in accordance with the Civil Pension Code, Supplement A., section 2., as to the date from which the pay of a Covenanted Civil Servant upon first arrival in India is to begin.

We have, &c.
(Signed) LYTTON.
F. P. HAINES.
E. C. BAYLEY.
A. J. ARBUTHNOT.
A. CLARKE.
E. B. JOHNSON.
W. STOKES.

Snb-Enclosure 1. *in above Enclosure* 1.

No. 1,351 T., dated Darjeeling, the 11th September 1877.

From HORACE A. COCKERELL, Esq., Officiating Secretary to the Government of Bengal, on tour, to the OFFICIATING SECRETARY TO THE GOVERNMENT OF INDIA, Home Department.

WITH reference to Under Secretary Mr. Neill's letter, No. 582, dated 7th July last, and subsequent telegram of the 29th ultimo, requesting that the services of a Junior Civilian may be placed at the disposal of the Government of India, for employment as an Assistant Commissioner of the third grade in Assam, I am directed to say that the post of Assistant Commissioner was offered to five Junior Civilians, all of whom have declined the offer and intimated that they prefer remaining in Bengal. Under these circumstances, it remains for the Government of India to say whether the refusal of these officers should be accepted, or whether they are, under the terms of their appointment, to be considered as liable to serve in Assam.

Sub-Enclosure 2. *in above Enclosure* 1.

No. 832, dated Simla, the 11th October 1877.

From ARTHUR HOWELL, Esq., Officiating Secretary to the Government of India, Home Department, to the SECRETARY TO THE GOVERNMENT OF BENGAL.

IN reply to your letter, No. 1,351 T., dated the 11th ultimo, reporting that five Junior Civilians have declined the appointment of Assistant Commissioner in Assam, and inquiring whether their refusal should be accepted, I am directed to request that the services of Mr. —— or Mr. —— may be placed at the disposal of this Department for employment in Assam.

2. The Government of India regret the necessity which compels the transfer of Civilians from the province which they may have originally selected, but the administration of Assam must be carried on, and it should be borne in mind that the Civil Servants attached to the Lower Provinces have always been available for service in Assam, and that the fact of Assam being formed into a Chief Commissionership does not alter their liability in this respect.

3. Officers whose services may be required in Assam or British Burma should, however, be informed that their transfer is not permanent; that their names will be retained in italics in the civil list of the province from which they are taken; and that whenever their turn for promotion in their old province, may come, they will, if they wish it, be re-transferred to it as soon as arrangements can be made for the conduct of their duties in the non-regulation province to which they may have been deputed. I am to express a hope that His Honour the Lieutenant-Governor will facilitate temporary transfers of this nature, as it is only thus that the administration of small provinces can effectively be carried on, and it is reasonable to expect that the wider range of experience which officers will so acquire will not fail to be beneficial to both provinces.

ENCLOSURE 2.

To his Excellency the Right Hon. the Governor-General of India in Council.

MY LORD, India Office, London, 24th January 1878.

1. THE despatch of your Excellency in Council dated 1st November, No. 97 of 1877, on the subject of the destination of candidates selected for the Covenanted Civil Service, has been considered by me in Council.

2. I concur in the opinion expressed by your Lordship in Council that every Civil Servant is bound to serve wherever the Government, at any period of his career, requires him to go. This should be laid down as a general rule. INDIA CIVIL SERVICE.

3. The above general rule will be communicated to the selected candidates, and at the same time they will be informed that, in the ordinary course, appointment to the Lower Provinces of Bengal includes liability to service in Assam and Burma; to North-west Provinces and Punjab, liability to service in Oudh and Sind; to Madras, liability to service in Burma; and to Bombay, liability to service in the Central Provinces. Destination of selected candidates.

4. Further, I am of opinion that no Civil Servant should, as a general rule, be sent to the outlying provinces above named (Assam, Burma, Sind, &c.) until he has passed his departmental examinations in his own Presidency.

I have, &c.
(Signed) SALISBURY.

In compliance with the request contained in the above letter the following Notice was communicated to the Candidates selected in 1878 *for the Civil Service of India, at the time of their making their choice of Presidency.*

Though the Government of India will, as far as possible, respect the choice of presidency originally made, and will be prepared to consider each officer's convenience, the first election and allotment cannot be final and absolute, but must be subject to the exigencies of the public service.

Every Civil Servant is bound to serve wherever the Government, at any period of his career, requires him to go.

In the ordinary course, appointment to the Lower Provinces of Bengal includes liability to service in Assam and Burma; to the North-West Provinces and Punjab, liability to service in Oudh and Sind; to Madras, liability to service in Burma; and to Bombay, liability to service in the Central Provinces.

The deputation of civilians to British Burma or to Assam will not necessarily be permanent. When so deputed their names will be retained in italics in the civil list of the province from which they are taken, and whenever their turn for promotion in their old province may come, they will, if they so wish, be allowed to return to it, as soon as the public interests admit of their re-transfer.

A Civil Servant will not as a rule be sent to the provinces above-named (Assam, Burma, Sind, &c.) until he has passed his departmental examinations in his own presidency.

Civil Service Commission,
27th May 1878.

The Secretary, Civil Service Commission, to the Under Secretary of State, India Office.

SIR, 24th May 1878.

I AM directed by the Civil Service Commissioners to request that they may be informed whether they are right in supposing it to be the wish of the Secretary of State for India in Council that the usual prizes should be offered at the half-yearly examinations to be competed for by the 13 candidates who are now being selected for the Civil Service of India, independently of those who will be selected in July. Prizes at the Periodical and Final Examinations.

If the two sets of candidates were to pass the half-yearly examinations separately, the Commissioners apprehend that no question would arise, but the case may be different if, as they propose, both are examined together. It is obvious, however, that in this case the candidates of July, being selected at an earlier age, as well as at a later date, would be at some disadvantage in a common competition for the same prizes.

As the Commissioners are desirous, if possible, to make the usual announcement on the subject in the "Instructions to Candidates," which should be issued in a few days, they would be greatly obliged by an early answer to their inquiry.

I have, &c.

INDIA CIVIL SERVICE.

Prizes at the Periodical and Final Examinations.

The Under Secretary of State, India Office, to the Secretary, Civil Service Commission.

SIR, 5th June 1878.

I AM directed to acknowledge the receipt of your letter of the 24th of May relative to the question of whether prizes are to be offered to the candidates for the Civil Service who have been selected at the recent examination, and to those who will be selected in July.

In reply, I am directed to state that a suitable proportion of the usual prizes should be given to the candidates who have been selected under the old system, but that to those to be selected in July and hereafter, and who will have to pass the period of probation at Oxford, Cambridge, Dublin, or one of the Scotch Universities, I do not propose that prizes shall be given, with the exception, perhaps, of prizes at the final examination.

I am, &c.

The Secretary, Civil Service Commission, to the Under Secretary of State, India Office.

SIR, 19th June 1878.

I AM directed by the Civil Service Commissioners to acknowledge the receipt of your letter of the 5th instant, on the subject of the prizes to be offered to the candidates for the Civil Service of India who have been selected at the recent examination, and to those who may be selected in July.

By this letter the Commissioners are informed that it is desired that a suitable proportion of the usual prizes should be offered to the candidates who have been selected under the old system, but it is not stated in what manner the principle of proportion should be applied, and as the Commissioners are themselves unable to suggest any application of it which would appear to them satisfactory, they desire me to request that they may be favoured with a further expression of the views of the Secretary of State in Council on the subject.

From the same letter the Commissioners learn that to the candidates who are to be selected under the new system it is proposed to give no prizes, except, perhaps, at the final examination. The Commissioners would much regret if it were decided to carry this intention into effect.

They cannot doubt that such a decision would cause considerable disappointment to the candidates, especially as many of them may have seen the "Extracts from Instructions intended to be given to Candidates selected in July 1878," copies of which were forwarded to your Department, as requested in your letter of 19th November 1877, for dissemination at the Universities, which Extracts contained an announcement in the usual terms, that "after each examination prizes will be awarded." Apart, however, from this consideration, the Commissioners would deprecate the abolition of the system of prizes, which was settled after some deliberation by the Secretary of State in Council in the year 1866. They believe that these rewards have been of great use, both in furnishing the selected candidates with an incentive to sustained industry in their special studies throughout the period of their probation, and in affording assistance to deserving students of limited means; and they see no reason to think that under the new system, under which most, if not all, of the candidates may be expected to study at some University, there is likely to be less need either of an incentive to industry or of pecuniary assistance.

If the question is looked at as one of expenditure, it may be proper to recall the fact that the present system, when compared with that which

INDIA CIVIL SERVICE.

Prizes at the Periodical and Final Examinations.

it superseded, shows a considerable saving under this head. Not only is the aggregate sum (1,155*l.*) now annually offered in prizes for all the students in respect of all the subjects of study less than that (1,300*l.*) which was formerly given at one Presidency College in respect of one group of subjects, viz., the Oriental languages (as may be seen in detail on reference to the correspondence noted in the margin), but, owing to the stringency of the conditions under which the prizes are awarded, the amount expended falls considerably short of that which is offered. Thus, in the years 1875, 1876, and 1877, while the sum annually offered for competition was 1,155*l.*, *i.e.*, 430*l.* for the three intermediate examinations, and 725*l.* for the final, the sum annually expended did not amount on the average to more than 800*l.*, *i.e.*, 300*l.* for the three intermediate and 500*l.* for the final examination. It should be added that, in pursuance of the new rules respecting the study of vernacular languages, it is proposed at the first of the intermediate examinations (as shown in the paper herewith enclosed), and again at the second examination, to offer only ten prizes of 10*l.* each, instead of fourteen, as at the corresponding examinations in the previous year.

C.S.C. to I.O., 23.2.66.
I.O. to C.S.C., 22.3.66.
C.S.C. to I.O., 26.3.66.
I.O. to C.S.C., 7.4.66.

I have, &c.

ENCLOSURE 1.

EXTRACT from INSTRUCTIONS to CANDIDATES selected in 1877 respecting their FIRST PERIODICAL EXAMINATION.

After the examination prizes will be given as follows :—

		£
For the greatest proficiency in	Law (Jurisprudence) - - -	10
,, ,,	Law (Notes of Cases, &c.) - -	10
,, ,,	Law (Indian) - - - -	10
,, ,,	Hindustani - - - -	10
,, ,,	Hindi - - - - -	10
,, ,,	Bengali - - - - -	10
,, ,,	Tamil - - - - -	10
,, ,,	Telugu - - - - -	10
,, ,,	Marathi - - - -	10
,, ,,	History and Geography of India -	10
,, ,,	Political Economy - - -	10
,, ,,	Sanskrit - - - -	10
,, ,,	Arabic - - - -	10
,, ,,	Persian - - - - -	10

No prize will be given except for a respectable degree of proficiency; and no candidate will receive a prize who does not exhibit satisfactory proficiency in each of the prescribed subjects.

ENCLOSURE 2.

PROPOSED ANNOUNCEMENT to CANDIDATES selected in 1878 respecting their FIRST PERIODICAL EXAMINATION.

After the examination prizes will be given as follows :—

		£
For the greatest proficiency in	Law (Jurisprudence) - -	10
,, ,,	Law (Notes of Cases, &c.) - -	10
,, ,,	Law (Indian) - - - -	10
,, ,,	Hindustani - - - -	10
,, ,,	Telugu - - - -	10
,, ,,	History and Geography of India -	10
,, ,,	Political Economy - - -	10
,, ,,	Sanskrit - - - -	10
,, ,,	Arabic - - - - -	10
,, ,,	Persian - - - - -	10

No prize will be given except for a respectable degree of proficiency; and no candidate will receive a prize who does not exhibit satisfactory proficiency in each of the prescribed subjects.

INDIA CIVIL SERVICE.

Prizes at the Periodical and Final Examinations.

The Under Secretary of State, India Office, to the Secretary, Civil Service Commission.

SIR, 3rd July 1878.

I AM directed by the Secretary of State for India in Council to acknowledge the receipt of your letter of the 19th June on the subject of the prizes to be given at the periodical examinations of selected candidates for the Civil Service of India.

2. In reply, I am directed to state that Viscount Cranbrook agrees that prizes shall be offered to the candidates selected in April last in accordance with the proposed announcement, a copy of which is attached to your letter. With respect to candidates to be selected in July and hereafter, he is of opinion that no prizes should be given except at the final examination.

I am, &c.

INDIA TELEGRAPH DEPARTMENT.

INDIA TELEGRAPH DEPARTMENT.

Competition for twelve appointments.

The Under Secretary of State, India Office, to the Secretary, Civil Service Commission.

SIR, 17th May 1878.

I AM directed by Lord Cranbrook to transmit the accompanying conditions of an examination for 12 appointments in the Indian Telegraph Department, with a request that you will lay it before Her Majesty's Civil Service Commissioners, with a view to the necessary arrangements being made for the conduct of the examination.

The subjects of examination are precisely the same as those specified in the prospectus for the forthcoming examination for admission to the Royal Indian Civil Engineering College; and it is Lord Cranbrook's wish that the two examinations should be held at the same time, but that the names of the competitors for the two services should be kept quite distinct, on account of the candidates for the Indian Telegraph Department being all nominated by the Secretary of State for India, while the examination for admission to the Civil Engineering College is an open one.

A complete list of the nominated candidates for the Telegraph Department, the number of whom will probably not exceed 25, will be sent to you on or before the 15th June.

I am, &c.

ENCLOSURE.

CONDITIONS of ADMISSION to the TELEGRAPH DEPARTMENT of the GOVERNMENT of INDIA.

1. Nominations will be made by the Secretary of State of candidates to compete for 12 appointments.

2. Nominees must be British born subjects, and must be of not less than 17 nor more than 20 years of age on the 1st day of July 1878.

3. A nominee will be required, immediately after receiving a nomination, to furnish a certificate showing the date of his birth, and he must be passed by the Medical Board of this Office as possessing a constitution sufficiently vigorous to withstand fatigue and exposure in a tropical climate; the medical examination taking place, at his option, either immediately before or immediately after a competitive examination which he will be required to attend, and which will be held in the latter end of June or beginning of July, under the orders of the Civil Service Commissioners, and will embrace the following subjects :—

Competition for twelve appointments.

	Subjects.	Marks.
(1.)	English (Composition, History, and Literature)	750
(2.)	Mathematics (pure and mixed)	2,500
(3.)	Latin (translation from and into)	1,000
(4.)	Greek (ditto, ditto)	1,000
(5.)	French (translation from and into, and dictation)	750
(6.)	German (ditto, ditto)	750
*(7.)	Inorganic chemistry	700
*(8.)	Heat and light	700
*(9.)	Electricity and magnetism	700
*(10.)	Geology and physical geography	700
(11.)	Mechanical drawing of geometrical figures, plane and solid, use and construction of scales, perspective	500
(12.)	Freehand (figure and landscape) drawing	500

4. Of these subjects two will be compulsory, viz. :—

(1.) English composition to the extent of a candidate's being able to write grammatically and with correct spelling. An exercise will also be given in writing English from dictation.

(2.) The following branches of mathematics, viz., arithmetic, algebra, geometry (first four and sixth books of Euclid), mensuration, plane trigonometry, and the elements of statics and dynamics, in each of which the candidate will be required to show competent proficiency.

The examination in English literature will be limited to the following authors :—

Shakespeare	King Lear.
"	Richard III.
Dryden (Christie's edition)	Stanzas on Cromwell.
"	Astrea Redux.
"	Annus Mirabilis.
"	Absolom and Achitophel.
Burke	Letters on a Regicide Peace.
Trench	On the Study of Words.

The examination in English History will be limited to the period from 1793 to 1820.

5. A deduction of 200 marks will be made from the marks gained by a candidate in each subject of the competitive examination, except mathematics, in which there will be no deduction, and mechanical drawing, in which only 100 marks will be deducted. But a part or the whole of such deduction may be remitted in cases of special proficiency exhibited in any subject.

6. Of the nominated candidates presenting themselves at the examination, the 12 who gain the highest aggregate number of marks will be entitled to admission into the Royal Indian Engineering College at Coopers Hill, in order to undergo a course of instruction in mathematics, mechanics, surveying, mechanical drawing, and natural science, and also in telegraph signalling.

7. Successful nominees will be admitted into the college on the first day of the term commencing in September next, and of these 12, six will, as explained further on (*see* Clause 13), be required to continue as students for three terms and the remaining six for six terms.

8. An annual charge of 150*l.* will be made for each student, in three payments of 50*l.* per term, which must be paid in advance at the Public Drawing Office of the Bank of England, on the receipt of a receivable order containing full directions as to the transmission of the money, which will be forwarded, shortly before the fees fall due, to the parents or guardians of the students, by the Accountant, India Office, London, S.W.

9. In case, however, of a student whose parents or guardians may represent their inability to defray the whole of this charge, payment of a part, not exceeding 20*l.* per term or 60*l.* per annum, can be deferred, and effected by deductions from the student's salary during the first two years after his admission to the Government service. In such case he will be required to signify beforehand his own consent to the arrangement, and security must be given for payment of the deferred portions of the college fees, in the event of the student failing to enter the Government service, or not remaining in it sufficiently long to allow of payment being effected by deductions from his salary. The needful form of application for admission to the benefit of this rule will be obtainable on application by letter to the Secretary, Public Works Department, India Office, London, S.W. Under this arrangement the total charge payable at the time for board, lodging, and instruction may be reduced to 90*l.*

10. The college fees include all charges for tuition, board (exclusive of wine and beer), and lodging, with washing, but not for medical attendance. Students will be required to provide their own class books and drawing instruments. Drawing paper, drawing boards, and surveying instruments will be provided by the college.

---

* No candidate may take up more than three out of these four subjects.

Date

Great Britain.
Civil Service
Commissioners

Report
23
1879

INDIA TELEGRAPH DEPARTMENT.

Competition for twelve appointments.

11. period execu branch branch in pra
12. throug examii
13. of thos the hig tenden India. final ex
14. T follows

		Rs.
*1	D	600
*1	D	900
*1	D	900
*1	D	900
4	F	600
7	Se	360
9	Ti	
87	A	

15. T for the g
16. T Instruct for exerc division,
17. E and light bed linen the ordin
18. A
19. Ev gymnasiu
20. Stu

...ll be tested by ...eys, notes, &c. ...equired in each ...iency in all the Competent skill

...in his studies ...at the different ...llege.
...rd term, when, ...he six who gain ...is tant Superin- ...ree passages to ...ns, so that their ...th term.
at present as

...ments of ...depend- ...l service

...College, and ...ht.
...professors or ...be responsible ...student in his ...friends.
...and with fuel ...pply his own ...ot included in

...ercise in the

be prescribed by the President.

...wear academical dress under such regulations as may

India Office, January 1878.

(Signed) W. T. THORNTON,
Secretary, Public Works Department.

UNIV. OF MICH.
Mor..... Sample ... of this title ..... $.....
Duck..... S. B. Dept. .....
Cloth ..... Of

The Secretary, Civil Service Commission, to the Under Secretary of State, India Office.

23rd May 1878.

SIR,

I AM directed by the Civil Service Commissioners to acknowledge the receipt of your letter of the 17th instant, with enclosure, on the subject of an examination, to be held simultaneously with that for the Royal Indian Engineering College, for 12 appointments in the Indian Telegraph Department.

In reply, I am to acquaint you, for Lord Cranbrook's information, that the Commissioners will readily give effect to his Lordship's wishes as conveyed by your letter.

I have, &c.

---

* The officers of the ordinary Telegraph staff are eligible to these four appointments, which, however, are not necessarily reserved for them.

LONDON:
Printed by GEORGE E. EYRE and WILLIAM SPOTTISWOODE,
Printers to the Queen's most Excellent Majesty.
For Her Majesty's Stationery Office.